Encl: para # 5.B

Whiteley Engineering

19062 Hwy 305 N, Suite 105
Poulsbo, WA 98370
(360) 779-7993

B, P & C WATER SYSTEM

Group B Water System Design

OWNER:

CARL BRACALE
12918 ~~12822~~ 62nd AVENUE NW
GIG HARBOR, WA 98322

PREPARED BY:

WHITELEY ENGINEERING
19062 HWY 305 N, SUITE 105
POULSBO, WA 98370
(360) 779-7993

AUGUST 21, 1996

WILLIAM H. WHITELEY III
STATE OF WASHINGTON
24162
REGISTERED
PROFESSIONAL ENGINEER
8-21-96
EXPIRES 11-19-97

GROUP B WATER SYSTEM DEVELOPMENT CHECKLIST

DATE 7/22/96

APPLICANT: Carl Brazale
ADDRESS: [redacted] 62nd Ave. N.W.
12918 Gig Harbor, WA 98322
DAY PHONE: 1-800-858-5817 EVENING PHONE:
PROPOSED WATER SYSTEM NAME: B, P & C WATER SYSTEM
COUNTY: Pierce Co.
LOCATION: a. Cross Roads 150th
b. Quarter Section / Section / Township / Range
SW 1/4 SE 1/4 S 14 T 22 R 1 W

SIZE: Number of Connections 6 NOW (9 IN THE FUTURE) Population to be Served

****

The items or documents checked below are necessary for formal State approval of all Group B Public Water Systems ranging in size from two to nine connections. All water quality tests must be conducted by state-certified laboratories. Fees will be charged for review and approval of this application and issuance of a system identification number. Some local health departments offer approvals for small systems. Requirements and fees may vary. **If this proposal is intended to gain approval for existing services and you do not propose to add any additional services, some of the following requirements may be waived.** Contact your local health department or this office for more specific information.

N/A **Water Right Permit (if required)**
x **Well Log**
x **Pump/Aquifer Test of Well**
x **Totalizing Source Meter**
x **Site Inspection Report**
x **Completed Group B Workbook**
x **Financial Viability Worksheet**
x **Vicinity and Service Area Sketch***
x **System Layout Sketch***
x **Protected Zone Sketch/Wellhead Protection Inventory***
(All sketches can be included in workbook)
x **Declaration of Covenant**
x **Restrictive Covenant (Required of any neighbor ≤ 100 ft to the well)**
x **Water Facilities Inventory (WFI) Form**
Other:

WATER QUALITY TESTS:

x **Bacteriological**
x **Complete Inorganic**
Volatile Organic Chemicals (VOC)
Synthetic Organic Chemicals (SOC)
Radionuclides
Pesticides

Remarks/Notes:

S

Notification Number W 05441

WASHINGTON STATE DEPARTMENT OF ECOLOGY

Notice of Intent to Construct a WATER WELL

This form must be received by the Department of Ecology with the required fees three days before your well is constructed. Complete both sides of this form. Submit one form for each new well and submit one check or money order for each form, payable to the Department of Ecology, P.O. Box 5128, Lacey, WA 98503-0210. Do not send cash. Instructions for filling out this form are printed on the back.

1. Property Owner: Carl Bracale Phone No. 1-800-858-5817
   Address: 12822 62nd Av NW Gig Harbor WA 98322
2. Agent (if Different From #1): GRESHAM WELL DRILLING, INC. Phone No. 360 779-9327
   Address: 3105 NW Lakeness Road Poulsbo, WA 98370
3. Well Location: SW 1/4 of the SE 1/4 Section 14 Township 22 Range 1W E.WM or W.WM (circle one)
   Street Address (if known): 17113 150th ST KPN Gig Harbor
4. Location Of Well: *(please check county)*

☐	Adams County	01-ERO	☐	Grays Harbor County	14-SWR	☒	Pierce County	27-SWR
☐	Asotin County	02-ERO	☐	Island County	15-NWR	☐	San Juan County	28-NWR
☐	Benton County	03-CRO	☐	Jefferson County	16-SWR	☐	Skagit County	29-NWR
☐	Chelan County	04-CRO	☐	King County	17-NWR	☐	Skamania County	30-SWR
☐	Clallam County	05-SWR	☐	Kitsap County	18-NWR	☐	Snohomish County	31-NWR
☐	Clark County	06-SWR	☐	Kittitas County	19-CRO	☐	Spokane County	32-ERO
☐	Columbia County	07-ERO	☐	Klickitat County	20-CRO	☐	Stevens County	33-ERO
☐	Cowlitz County	08-SWR	☐	Lewis County	21-SWR	☐	Thurston County	34-SWR
☐	Douglas County	09-CRO	☐	Lincoln County	22-ERO	☐	Wahkiakum County	35-SWR
☐	Ferry County	10-ERO	☐	Mason County	23-SWR	☐	Walla Walla County	36-ERO
☐	Franklin County	11-ERO	☐	Okanogan County	24-CRO	☐	Whatcom County	37-NWR
☐	Garfield County	12-ERO	☐	Pacific County	25-SWR	☐	Whitman County	38-ERO
☐	Grant County	13-ERO	☐	Pend Oreille County	26-ERO	☐	Yakima County	39-CRO

5. Amount Enclosed: Please fill out the portion below carefully. The return address label must contain the name and address of the person submitting the notification payment. This portion will be validated and returned to them as proof of payment. Send the entire form and check or money order payable to Dept. of Ecology, P.O. Box 5128, Lacey, WA 98503-0210. Do not send cash.

This notification number must be provided to your well driller: W 054411

Well Size: 1. New well less than 12" in diameter - Amount of payment $100.00
2. New well 12" in diameter, or more - Amount of payment $200.00

Amount Enclosed $ 100.00 Owner's Name C. Bracale

Submitted By (return address)

Name GRESHAM WELL DRILLING, INC.
Mailing Address 3105 NW Lakeness Road Poulsbo, WA 98370
City State Zip

Agency Validation
CJ:
Date:

S

Continued on back →

ECY 040-21 (12/93)

First Copy with Ecology
Copy — Owner's Copy
Copy — Driller's Copy

WATER WELL REPORT

STATE OF WASHINGTON

Start Card No. W054411
UNIQUE WELL I.D. # ABP991
Water Right Permit No.

(1) OWNER: Name MR. CARL BRACALE Address 12822 62ND AVE NW., GIG HARBOR, WA 98322

(2) LOCATION OF WELL: County PIERCE - SW 1/4 SE 1/4 Sec 14 T. 22 N., R 1W W.M.

(2a) STREET ADDRESS OF WELL (or nearest address) 17113 - 150TH STREET KPN, GIG HARBOR

(3) PROPOSED USE: [XX] Domestic [ ] Irrigation [ ] DeWater [ ] Industrial [ ] Test Well [ ] Municipal [ ] Other

(4) TYPE OF WORK: Owner's number of well (If more than one)
Abandoned [ ] New well [XX] Deepened [ ] Reconditioned [ ]
Method: Dug [ ] Cable [ ] Rotary [XX] Bored [ ] Driven [ ] Jetted [ ]

(5) DIMENSIONS: Diameter of well 6 inches.
Drilled 179 feet. Depth of completed well 179 ft.

(6) CONSTRUCTION DETAILS:
Casing Installed: 6 " Diam. from 0 ft. to 174 ft.
Welded [XX] " Diam. from ft. to ft.
Liner installed [ ] " Diam. from ft. to ft.
Threaded [ ]

Perforations: Yes [ ] No [XX]
Type of perforator used
SIZE of perforations in. by in.
perforations from ft. to ft.
perforations from ft. to ft.
perforations from ft. to ft.

Screens: Yes [XX] No [ ]
Manufacturer's Name JOHNSON
Type STAINLESS STEEL Model No.
Diam. 6 Slot size 12 from 174 ft. to 179 ft.
Diam. Slot size from ft. to ft.

Gravel packed: Yes [ ] No [XX] Size of gravel
Gravel placed from ft. to ft.

Surface seal: Yes [XX] No [ ] To what depth? 18 ft.
Material used in seal BENTONITE
Did any strata contain unusable water? Yes [ ] No [XX]
Type of water? Depth of strata
Method of sealing strata off

(7) PUMP: Manufacturer's Name GOULDS
Type: SUBMERSIBLE 25GS30 H.P. 3

(8) WATER LEVELS: Land-surface elevation above mean sea level ft.
Static level 126 ft. below top of well Date 5/31/96
Artesian pressure lbs. per square inch Date
Artesian water is controlled by (Cap, valve, etc.)

(9) WELL TESTS: Drawdown is amount water level is lowered below static level
Was a pump test made? Yes [XX] No [ ] If yes, by whom? GRESHAM
Yield: 35 gal./min. with 21 ft. drawdown after 4 hrs.
" " " "
" " " "

Recovery data (time taken as zero when pump turned off) (water level measured from well top to water level)

Time	Water Level	Time	Water Level	Time	Water Level
FULL RECOV. IN 3 MIN.					

Date of test 5/31/96
Bailer test 20 gal./min. with 14 ft. drawdown after 1 hrs.
Airtest gal./min. with stem set at ft. for hrs.
Artesian flow g.p.m. Date
Temperature of water 50 Was a chemical analysis made? Yes [XX] No [ ]

(10) WELL LOG or ABANDONMENT PROCEDURE DESCRIPTION

Formation: Describe by color, character, size of material and structure, and show thickness of aquifers and the kind and nature of the material in each stratum penetrated, with at least one entry for each change of information.

MATERIAL	FROM	TO
DARK BROWN TOPSOIL	0	3
BROWN HARDPAN	3	36
LOOSE BROWN SILTY COARSE SAND	36	
& GRAVEL		92
FINE BROWN SAND	92	97
GRAY COARSE SAND & GRAVEL	97	109
GRAY COARSE SAND & GRAVEL	109	127
BROWN CLAY	127	130
BROWN SILTY SAND	130	136
BROWN SILTY GRAVEL	136	149
BROWN SILTY SAND & GRAVEL, H20	149	179

Work Started 5/20/96, 19. Completed 5/21/96, 19

WELL CONSTRUCTOR CERTIFICATION:

I constructed and/or accept responsibility for construction of this well, and its compliance with all Washington well construction standards. Materials used and the information reported above are true to my best knowledge and belief.

NAME GRESHAM WELL DRILLING, INC. (PERSON, FIRM, OR CORPORATION) (TYPE OR PRINT)
Address 3105 NW LAKENESS RD.,POULSBO,WA 98370
(Signed) (WELL DRILLER) License No. 0761
Contractor's Registration No. GRESHWD055BC Date 5/31/96, 19

(USE ADDITIONAL SHEETS IF NECESSARY)

Ecology is an Equal Opportunity and Affirmative Action employer. For special accommodation needs, contact the Water Resources Program at (206) 407-6600. The TDD number is (206) 407-6006.

GRESHAM WELL DRILLING
3105 N.W. LAKENESS ROAD
779-9323/779-6077 FAX

DATE 5-30-96
WELL ID# [illegible]-991

PUMP TEST LOG

ER Carl Bracale
ADDRESS 12822 62nd Ave NW
Gig Harbor WA 98322
DEPTH OF WELL 179'
SIZE OF CASING 6"
TOP OF SCREEN 174-179
AMOUNT OF SCREEN 5'
COMMENTS:

LOCATION SW 1/4 SE 1/4
SEC. 14 T 22 NR 1W WM
STATIC LEVEL 126'
CASING STICKUP 1'
AMOUNT OF CASING 179 ~~Depth~~
APPROX. GPM WHEN BALED 20
PUMP USED Goulds 3 HP 25GS30
SIZE OF DISCHARGE 1¼"
PUMP SETTING 170'

CLOCK TIME	ELASPED TIME SINCE PUMPING START/STOP (MIN)	DEPTH TO WATER BELOW MEASURING POINT (FT)	DRAWDOWN OR RECOVERY	PUMPING RATE GPM	REMARKS
12.30		126		35	
12.35		144.3		35	
12.40		146.4		35	
12.45		147.0		35	
1.00		147.0		35	
2.00		147.0		35	
3.00		147.0		35	
4.00		147.0		35	
5.00		147.0		35	
5.01	Recovery	132.			
5:02		127.1			
5.03	Full Rec.	126.0			

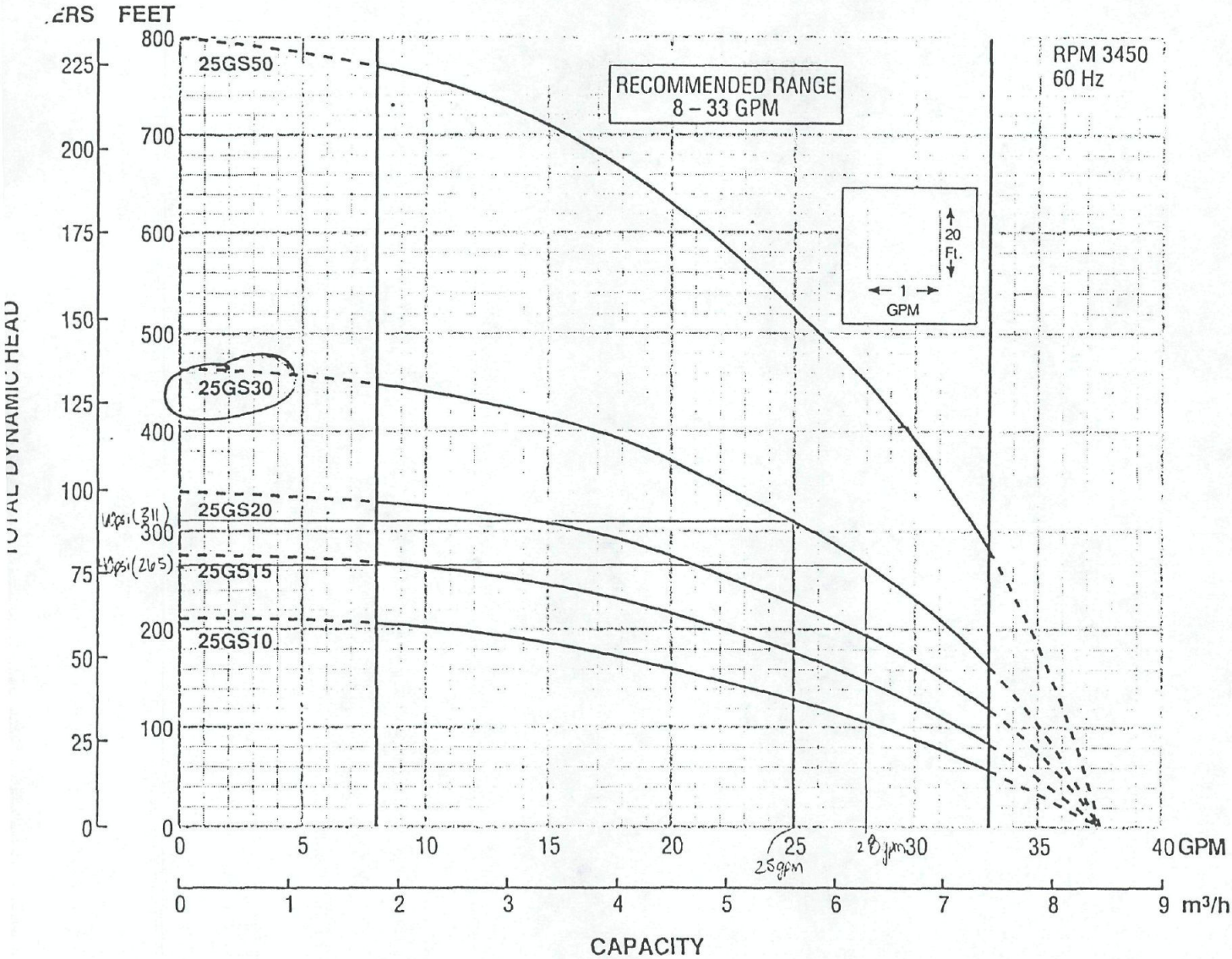

IMENSIONS AND WEIGHTS

Model	HP	Phase	Stages	Length (inches)			Weight (lbs.)		
				W.E.②	Motor	L.O.A.③	W.E.	Motor	Total
5GS10412	1	1	7	12.2	11.8	24.0	7	23	30
5GS15412	1½	1	9	14.1	13.6	27.7	8	28	36
5GS15422	1½	1	9	14.1	15.1	29.2	8	31	39
5GS15432,34	1½	3	9	14.1	11.8	25.9	8	23	31
5GS20412	2	1	11	16.0	15.1	31.1	9	30	39
5GS20432,34	2	3	11	16.0	13.6	29.6	9	28	37
5GS30412	3	1	15	19.7	23.5	43.2	11	52	63
5GS30432,34	3	3	15	19.7	20.6	40.3	11	43	54
5GS50412	5	1	26	31.3	29.5	60.8	17	69	86
5GS50432,34	5	3	26	31.3	23.6	54.9	17	53	70

W.E. = water end or pump without motor.
L.O.A. = length of assembly – complete pump – water end and motor.

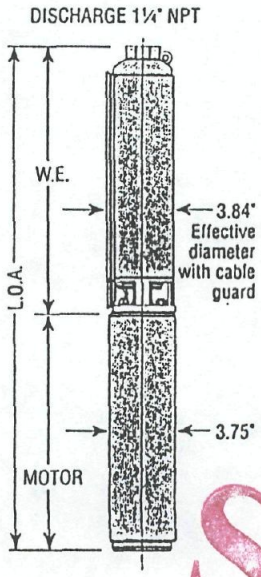

TWISS ANALYTICAL LABORATORIES, INC.

26280 Olhava Way, Suite C Poulsbo, WA 98370 Telephone (206) 779-5141 FAX (206) 779-5150

WATER SAMPLE INFORMATION FOR INORGANIC CHEMICAL ANALYSIS

DO NOT WRITE IN SHADED AREAS, PLEASE FILL BOXES NUMBERED 1 THRU 14, SEE BACK FOR INSTRUCTIONS

LABORATORY NUMBER: 01008638

DATE RECEIVED: 6/24/96

1. DATE COLLECTED: 5/30/96 5:00:00 PM

2. SYSTEM NAME: Carl Bracale

3. SYSTEM I.D. NO. Pending

4. GROUP: B

5. COUNTY: Pierce

6. SOURCE TYPE: ☐ Surface ☒ Well ☐ Spring ☐ Purchase

7. SAMPLE TAKEN ☒ Before Treatment ☐ After Treatment

8. SOURCE NO.:

9. SOURCE NAME:

10. COLLECTED BY Gresham Drilling Telephone (206) 779-9323

11. IF TAKEN AFTER TREATMENT IT WAS: ☐ FLUORIDATED ☐ CHLORINATED ☐ FILTERED ☐ WATER SOFTNER Softner Other

12. If Taken From Distribution, Indicate Address:

13. Party To Pay For Testing: Signature: Gresham Well Drilling 3105 NW Lakeness Poulsbo, WA 98370 Telephone (206) 779-9323

14. Remarks (water quality etc.) Group B Inorganics

LABORATORY REPORT (Do Not Write Inside This Box)

TESTS			MCL 1	Less Than	RESULT	UNIT	Compliance Yes	Compliance No	Chemist Initials
Antimony		Sb	0.006	<	0.006	mg/L	✓		ST
Arsenic	P	As	0.05		0.005	mg/L	✓		ST
Barium	P	Ba	2.0		0.02	mg/L	✓		ST
Beryllium		Be	0.004	<	0.001	mg/L	✓		ST
Cadmium	P	Cd	0.005	<	0.001	mg/L	✓		ST
Chromium	P	Cr	0.1		0.01	mg/L	✓		ST
Copper		Cu	1.0 2			mg/L			
Iron		Fe	0.3		0.19	mg/L	✓		ST
Lead	P	Pb	0.05 2			mg/L			
Manganese		Mn	0.05	<	0.005	mg/L	✓		ST
Mercury	P	Hg	0.002	<	0.0002	mg/L	✓		JCS
Nickel		Ni	0.1	<	0.005	mg/L	✓		ST
Selenium	P	Se	0.050	<	0.005	mg/L	✓		ST
Silver		Ag	0.1	<	0.001	mg/L	✓		ST
Sodium	P	Na			4.3	mg/L			ST
Thallium		Tl	0.002	<	0.002	mg/L	✓		ST
Zinc		Zn	5.0		0.05	mg/L	✓		ST
Hardness					83.6	mg/L			KW
Conductivity			700		163	umho/cm	✓		CAS
Turbidity	P		1.0		5.8	NTU		✓	KW
Color			15.0		5	Color units	✓		KW
Chloride		Cl	250		2.92	mg/L	✓		KW
Cyanide		CN	0.2	<	0.05	mg/L	✓		RK
Fluoride		F	2.0		0.1	mg/L	✓		JCS
Nitrate	P	as N	10.0		0.7	mg/L	✓		KW
Nitrite		as N	1.0		0.01	mg/L	✓		KW
Sulfate		SO4	250			mg/L			
TDS			500			mg/L			

LABORATORY COMMENTS:
Cyanide done by Sound Analytical Services; Lab Code: 107.

Laboratory Supervisor: [signature] Date of Report: 6/21/96

SEE RC 71 6-24 Vox

S

TWISS ANALYTICAL LABORATORIES, INC.
26280 Olhava Way, Suite [illegible] Poulsbo, WA 98370 Telephone (206) 779-5141 FAX ([illegible]) 779-5150

WATER SAMPLE INFORMATION FOR INORGANIC CHEMICAL ANALYSIS

DO NOT WRITE IN SHADED AREAS, PLEASE FILL BOXES NUMBERED 1 THRU 14, SEE BACK FOR INSTRUCTIONS

LABORATORY NUMBER
01009157

DATE RECEIVED
6/25/96

1. DATE COLLECTED:
6/24/96 10:00:00 AM

2. SYSTEM NAME:
Carl Bracale

3. SYSTEM I.D. NO.

4. GROUP:

5. COUNTY:
Kitsap

6. SOURCE TYPE:
☐ Surface ☒ Well
☐ Spring ☐ Purchase

7. SAMPLE TAKEN
☒ Before Treatment
☐ After Treatment

8. SOURCE NO.:

9. SOURCE NAME:

10. COLLECTED BY
Gresham Drilling
Telephone (206) 779-9323

11. IF TAKEN AFTER TREATMENT IT WAS:
☐ FLUORIDATED
☐ CHLORINATED
☐ FILTERED
☐ WATER SOFTNER
Softner
Other

12. If Taken From Distribution, Indicate Address:

13. Party To Pay For Testing:
Signature:
Gresham Well Drilling
3105 NW Lakeness
Poulsbo, WA 98370
Telephone (206) 779-9323

14. Remarks (water quality etc.)

LABORATORY REPORT
(Do Not Write Inside This Box)

TESTS		MCL 1	Less Than	RESULT	UNIT	Compliance Yes	Compliance No	Chemist Initials
Antimony	Sb	0.006			mg/L			
Arsenic P	As	0.05			mg/L			
Barium P	Ba	2.0			mg/L			
Beryllium	Be	0.004			mg/L			
Cadmium P	Cd	0.005			mg/L			
Chromium P	Cr	0.1			mg/L			
Copper	Cu	1.0 2			mg/L			
Iron	Fe	0.3			mg/L			
Lead P	Pb	0.05 2			mg/L			
Manganese	Mn	0.05			mg/L			
Mercury P	Hg	0.002			mg/L			
Nickel	Ni	0.1			mg/L			
Selenium P	Se	0.050			mg/L			
Silver	Ag	0.1			mg/L			
Sodium P	Na				mg/L			
Thallium	Tl	0.002			mg/L			
Zinc	Zn	5.0			mg/L			
Hardness					mg/L			
Conductivity		700			umho/cm			
Turbidity P		1.0		0.56	NTU	✓		CAS
Color		15.0			Color units			
Chloride	Cl	250			mg/L			
Cyanide	CN	0.2			mg/L			
Fluoride	F	2.0			mg/L			
Nitrate P	as N	10.0			mg/L			
Nitrite	as N	1.0			mg/L			
Sulfate	SO4	250			mg/L			
TDS		500			mg/L			

LABORATORY COMMENTS:

Laboratory Supervisor: [signature]

Date of Report: 6/28/96

1- MCL, Maximum contamination level; 2- Federal Action Level is 1.3 mg/L for Copper and 0.015 mg/L for Lead; P- Primary Standard; TDS- Total Dissolved Solids

STATE OF WASHINGTON
DEPARTMENT OF HEALTH

WATER BACTERIOLOGICAL ANALYSIS

SAMPLE COLLECTION: READ INSTRUCTIONS ON BACK OF GOLDENROD COPY

If instructions are not followed, sample will be rejected.

DATE COLLECTED (MONTH DAY YEAR)	TIME COLLECTED	COUNTY NAME
5/30/96	: 500 ☐ AM ☒ PM	Pierce Co.

TYPE OF SYSTEM: ☒ PUBLIC ☐ INDIVIDUAL (serves only 1 residence)

IF PUBLIC SYSTEM, COMPLETE: I.D. No. Pending

CIRCLE GROUP A (B)

NAME OF SYSTEM: Carl Bracale ABR-991

SPECIFIC LOCATION WHERE SAMPLE COLLECTED: Well

TELEPHONE NO. DAY 360 779-9323 EVENING ( )

SAMPLE COLLECTED BY: (Name) Gorsham W.D.

SYSTEM OWNER/MGR.: (Name) Bracale

SOURCE TYPE ☐ GROUND WATER UNDER SURFACE INFLUENCE

☐ SURFACE ☒ WELL or WELL FIELD ☐ SPRING ☐ PURCHASED or INTERTIE ☐ COMBINATION or OTHER

SEND REPORT TO: (Print Full Name, Address and Zip Code)
Gorsham Well Drilling
3105 NW Lakeness Rd
Poulsbo WASHINGTON 98370

TYPE OF SAMPLE (check only one in this column)

☐ ROUTINE DRINKING WATER check treatment →
- ☐ Chlorinated (Residual: ____ Total ____ Free)
- ☐ Filtered
- ☐ Untreated or Other _____

☐ REPEAT SAMPLE Previous coliform presence Lab # _____ Date ___/___/___

☐ RAW SOURCE WATER Source # S ☐☐ ☐ Total Coliform
☒ NEW CONSTRUCTION or REPAIRS ☐ Fecal Coliform
☐ OTHER (Specify) _____

REMARKS:

(LAB USE ONLY) DRINKING WATER RESULTS

☐ UNSATISFACTORY, Coliforms present ☒ SATISFACTORY, Coliforms absent

REPEAT SAMPLES REQUIRED: ☐ E. Coli present ☐ E. Coli absent ☐ Fecal present ☐ Fecal absent

OTHER LABORATORY RESULTS

TOTAL COLIFORM _____ /100 ml E. COLI _____ /100ml
FECAL COLIFORM _____ /100 ml PLATE COUNT _____ /ml

ANOTHER SAMPLE REQUIRED

SAMPLE NOT TESTED BECAUSE:
- ☐ Sample too old
- ☐ Wrong container
- ☐ Incomplete form
- ☐ _____

TEST UNSUITABLE BECAUSE:
- ☐ Confluent growth
- ☐ TNTC
- ☐ Turbid culture
- ☐ Excess debris

SEE REVERSE SIDE OF GREEN COPY FOR EXPLANATION OF RESULTS

LAB NO. (7 DIGITS)	DATE, TIME RECEIVED	RECEIVED BY
0100868P	5/31/96 08:12	CAS

DATE REPORTED 6/1/96

LABORATORY: TWISS ANALYTICAL LAB 28280 OLHAVA WAY, SUITE C POULSBO, WA 98370

REMARKS

S

TWISS ANALYTICAL LABORATORIES, INC.

26280 Olhava Way, Suite C Poulsbo, WA 98370 Telephone (206) 779-5141 FAX (206) 779-5150

WATER SAMPLE INFORMATION FOR INORGANIC CHEMICAL ANALYSIS

DO NOT WRITE IN SHADED AREAS, PLEASE FILL BOXES NUMBERED 1 THRU 14, SEE BACK FOR INSTRUCTIONS

LABORATORY NUMBER
01008688

DATE RECEIVED
5/31/96

1. DATE COLLECTED:
5/30/96 5:00:00 PM

2. SYSTEM NAME:
Carl Bracale

3. SYSTEM I.D. NO.
Pending

4. GROUP:
B

5. COUNTY:
Pierce

6. SOURCE TYPE:
☐ Surface ☒ Well
☐ Spring ☐ Purchase

7. SAMPLE TAKEN
☒ Before Treatment
☐ After Treatment

8. SOURCE NO.:

9. SOURCE NAME:

10. COLLECTED BY
Gresham Drilling
Telephone (206) 779-9323

11. IF TAKEN AFTER TREATMENT IT WAS:
☐ FLUORIDATED
☐ CHLORINATED
☐ FILTERED
☐ WATER SOFTNER
Softner
Other

12. If Taken From Distribution, Indicate Address:

13. Party To Pay For Testing:
Signature:
Gresham Well Drilling
3105 NW Lakeness
Poulsbo, WA 98370
Telephone (206) 779-9323

14. Remarks (water quality etc.)
Group B Inorganics

LABORATORY REPORT
(Do Not Write Inside This Box)

TESTS		MCL 1	Less Than	RESULT	UNIT	Compliance Yes	Compliance No	Chemist Initials
Antimony	Sb	0.006	<	0.006	mg/L	✓		ST
Arsenic P	As	0.05		0.005	mg/L	✓		ST
Barium P	Ba	2.0		0.02	mg/L	✓		ST
Beryllium	Be	0.004	<	0.001	mg/L	✓		ST
Cadmium P	Cd	0.005	<	0.001	mg/L	✓		ST
Chromium P	Cr	0.1		0.01	mg/L	✓		ST
Copper	Cu	1.0 2			mg/L			
Iron	Fe	0.3		0.19	mg/L	✓		ST
Lead P	Pb	0.05 2			mg/L			
Manganese	Mn	0.05	<	0.005	mg/L	✓		ST
Mercury P	Hg	0.002	<	0.0002	mg/L	✓		JCS
Nickel	Ni	0.1	<	0.005	mg/L	✓		ST
Selenium P	Se	0.050	<	0.005	mg/L	✓		ST
Silver	Ag	0.1	<	0.001	mg/L	✓		ST
Sodium P	Na			4.3	mg/L			ST
Thallium	Tl	0.002	<	0.002	mg/L	✓		ST
Zinc	Zn	5.0		0.05	mg/L	✓		ST
Hardness				83.6	mg/L			KW
Conductivity		700		163	umho/cm	✓		CAS
Turbidity P		1.0		5.8	NTU		✓	KW
Color		15.0		5	Color units	✓		KW
Chloride	Cl	250		2.92	mg/L	✓		KW
Cyanide	CN	0.2	<	0.05	mg/L	✓		RK
Fluoride	F	2.0		0.1	mg/L	✓		JCS
Nitrate P	as N	10.0		0.7	mg/L	✓		KW
Nitrite	as N	1.0		0.01	mg/L	✓		KW
Sulfate	SO4	250			mg/L			
TDS		500			mg/L			

LABORATORY COMMENTS:
Cyanide done by Sound Analytical Services; Lab Code: 107.

S

Laboratory Supervisor:

Date of Report:
6/21/96

1- MCL, Maximum contamination level; 2- Federal Action Level is 1.3 mg/L for Copper and 0.015 mg/L for Lead; P- Primary Standard; TDS- Total Dissolved Solids

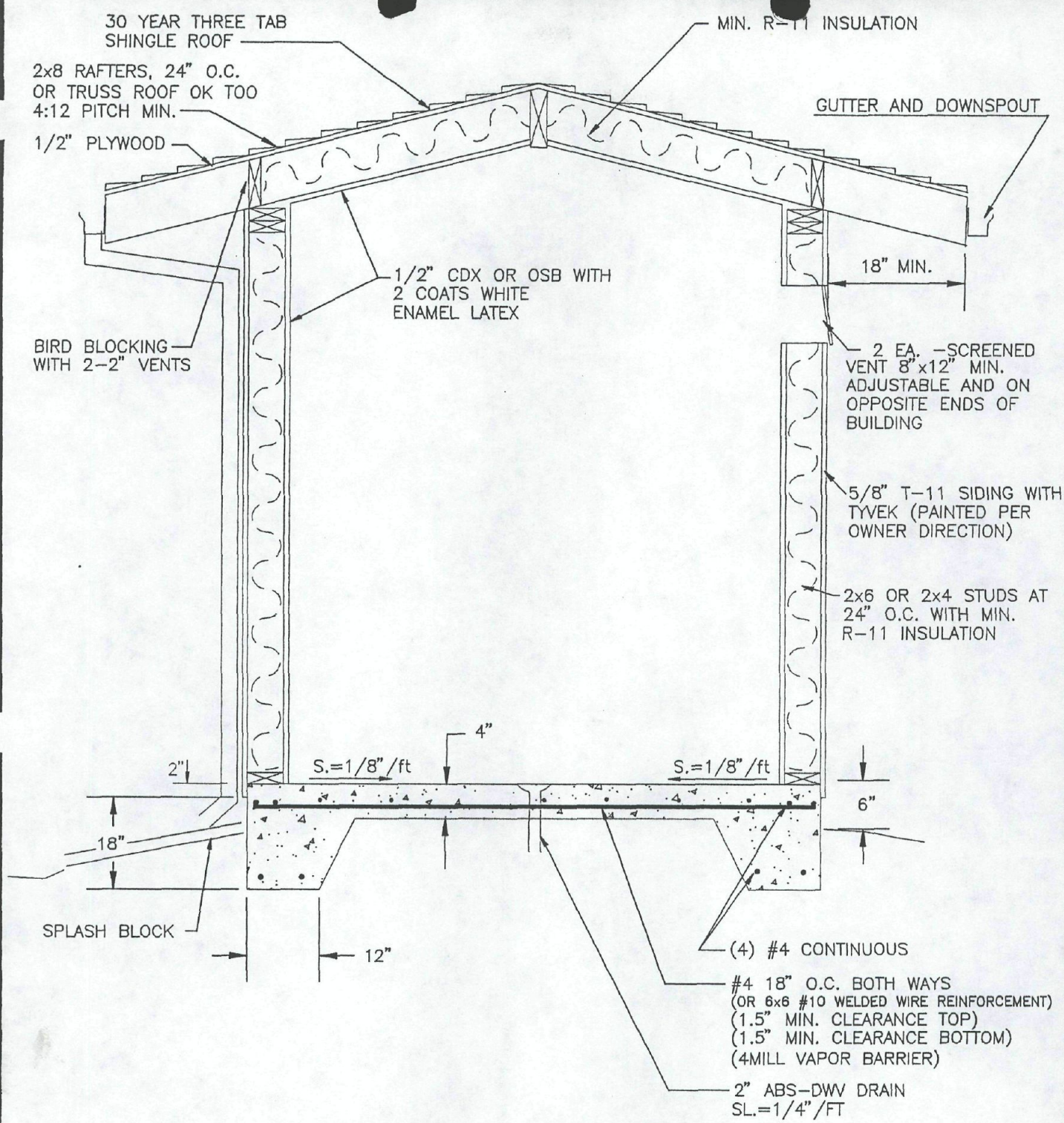

GROUP B WATER SYSTEM
PUMPHOUSE ELVATION

Whiteley Engineering

19062 Highway 305 N
Poulsbo, WA 98370
360-779-7993

DESIGN: WHW	SCALE: 1"=2'
DRAWN: DD	JOB No.: 1064
DATE: 7/23/96	SHEET: 1 of 3

C:\AAA\1064\1064B 7-23-96 10:55:13 am

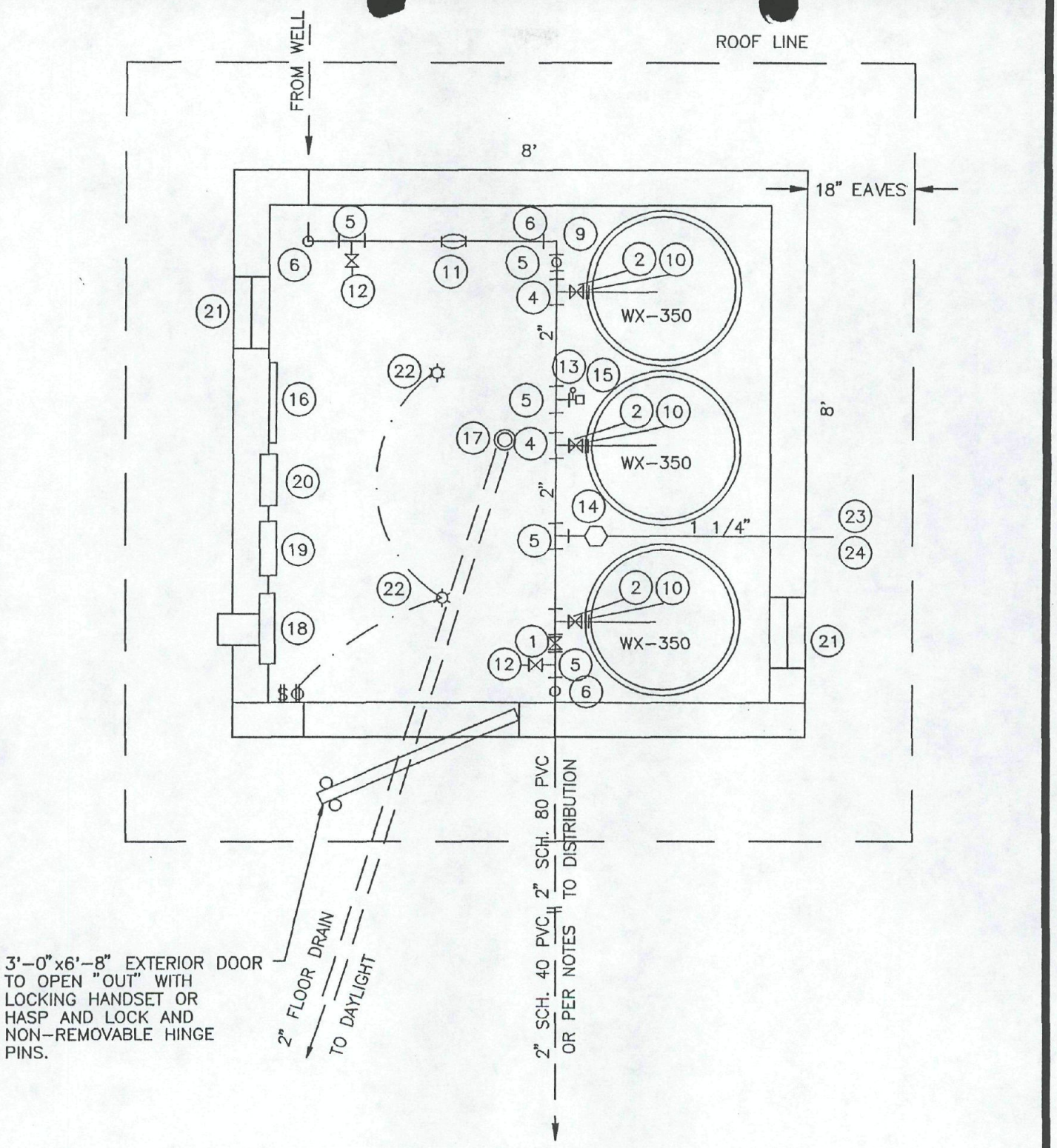

GROUP B WATER SYSTEM
PUMPHOUSE PLAN

Whiteley Engineering

19062 Highway 305 N
Poulsbo, WA 98370
360-779-7993

DESIGN: WHW	SCALE: 1"=2'
DRAWN: DD	JOB No.: 1064
DATE: 7/23/96	SHEET: 2 of 3

C:\AAA\1064\1064B 8-21-96 2:51:05 pm EST

NOTES:

1. ALL WATER PIPE INSIDE OR UNDER THE PUMPHOUSE IS TO BE SCHEDULE 80 PVC OR SCHEDULE 40 GALVANIZED IRON OR COPPER TUBING TYPE M (COPPER TUBING UNDERGROUND IS TO BE TYPE L SOFT).
2. ALL OTHER 2" WATERMAINS ARE TO BE 200 PSI POLYETHYLENE OR SCHEDULE 40 PVC OR CLASS 200 PVC WITH GASKET JOINTS. (POLYETHYLENE PIPE IS THE BEST CHOICE, HOWEVER COMPRESSION JOINTS MUST BE USED) ALL UNDERGROUND WATERMAINS ARE TO HAVE 36" OF COVER AND A 14 GAGE COPPER TRACE WIRE.
3. ALL PUMPHOUSE CONSTRUCTION IS TO MEET THE REQUIREMENTS OF THE UNIFORM BUILDING CODE AND THE LOCAL CITY OR COUNTY BUILDING DEPARTMENT.
4. THE MINIMUM INSULATION REQUIREMENT IS R-11, HOWEVER IT IS RECOMMENDED TO USE R-19 IN THE CEILING AND IN ANY 2x6 WALLS.
5. THE SURROUNDING GROUND ELEVATION IS TO BE 6" BELOW THE FINISHED FLOOR ELEVATION AND IS TO BE SLOPING AWAY FROM THE PUMPHOUSE.
6. INDIVIDUAL WATER METERS ARE REQUIRED. (SEE PUD #1 Std. DETAIL)
7. A 1" BLOW-OFF IS REQUIRED TO BE INSTALLED AT THE END OF THE MAIN AT ANY LOW POINTS.
8. IF THE WATERMAIN IS INSTALLED IN THE SAME TRENCH WITH POWER LINES, A MINIMUM OF 1' HORIZONTAL SEPARATION IS REQUIRED. WHERE THE POWER LINES MUST CROSS THE WATER LINES THE POWER LINES MUST BE 2" BELOW THE WATER MAIN.

⋈	1	2" GATE VALVE
⋈	2	1 1/4" GATE VALVE
⊥	3	2" TEE
⊥	4	2"x1 1/4" TEE
⊥	5	2"x3/4" TEE
⊥	6	2" 90° ELBOW
⊥	7	2" 45° ELBOW
⊥	8	2" 22 1/2° ELBOW
○	9	3/4" PLUG
‖	10	1 1/4" UNION
⊡	11	1 1/2" WATER METER
⋈	12	3/4" HOSE BIB (SAMPLE TAP 6" ABOVE FLOOR)
∘	13	PRESSURE GAGE (1-120 PSI)
⬡	14	ASME CODE PRESSURE RELIEF FALVE EQUAL TO KUNKLE SERIES 912 3/4"x1 1/4" 90 PSI
▫	15	PRESSURE SWITCH (40/60)
	16	WALL MOUNTED HEATER (500W MIN)
◎	17	2" FLOOR DRAIN
	18	ELECTRIC SERVICE PANEL
	19	EMERGENCY TRANSFER SWITCH
	20	WELL PUMP CONTROL
	21	8"x12" ADJUSTABLE SCREENED VENT
☼	22	150 WATT PORCELAIN LIGHT FIXTURE
	23	1 1/4" REMOVEABLE SCREEN
	24	1 1/4 - 90° ELBOW

GROUP B WATER SYSTEM LEGEND AND NOTES

S

Whiteley Engineering

19062 Highway 305 N
Poulsbo, WA 98370
360-779-7993

DESIGN: WHW	SCALE: NONE
DRAWN: DD	JOB No.: 1064
DATE: 7/23/96	SHEET: 3 of 3

C:\AAA\1064\1064B 7-23-96 10:55:13 am

B, P & C WATER SYSTEM HEADLOSS TABLE

HL/100' = 0.2083 x (100/C)^1.85 x (Q^1.85)/(d^4.8655) *Hazen-Williams*
WHERE C = 130

FROM	TO	CONNECTS	MID - Q	DIA - d	HL/100 FT	LENGTH	TOTAL HL	PRES. LOSS
Well Pump	Top of Casing	6	35	1.61	9.08	279	25.33	10.97
Top of Casing	Pump House	6	35	2.157	2.19	30	0.66	0.28
Pump House	A	6	25	2.157	1.17	20	0.23	0.10
A	B	4	21	2.157	0.85	535	4.55	1.97
B	C	4	21	2.157	0.85	160	1.36	0.59
B	D	2	17	2.157	0.58	260	1.50	0.65
D	E	1	15	2.157	0.46	300	1.37	0.59

PRESSURE AT NODES

LOCATION	ELEVATION	PRES.	HGL	HL	NEW HGL	PRESSURE
Pump House	100	40	192.4		192.40	
				0.10		
A	100				192.30	39.96
				1.97		
	115				190.33	32.61
				0.59		
C	114				189.74	32.79
B	115				190.33	32.61
				0.65		
D	118				189.68	31.03
				0.59		
E	115				189.09	32.07

c:\office\qpw\work\1064loss.wb2

S

WELL-X-TROL® SERIES 300 INSTALLATIONS

Optional Installation*

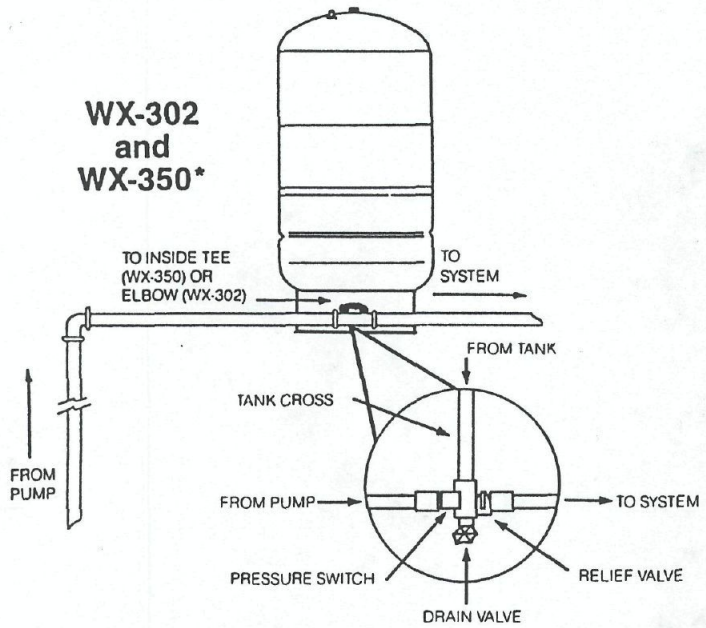

* With Model WX-350, installation requires the insertion of a plug on open end of inside tee (plug supplied).

Straight-Through Piping Installation

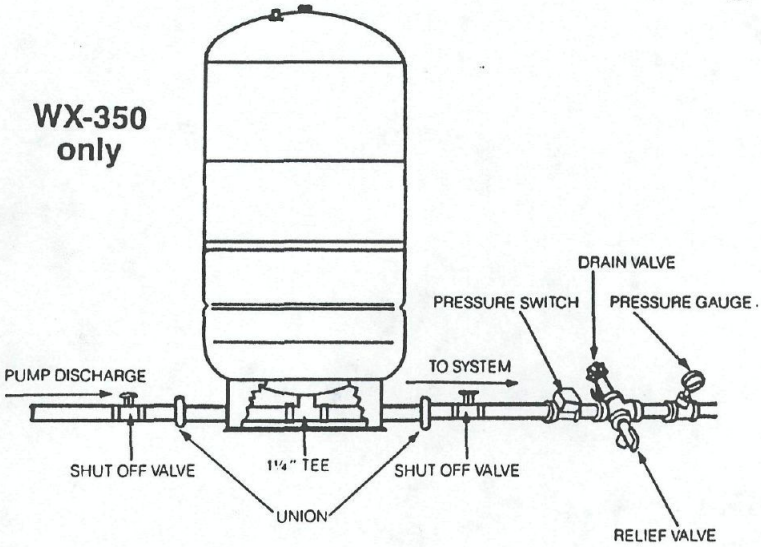

Specifications/Dimensions

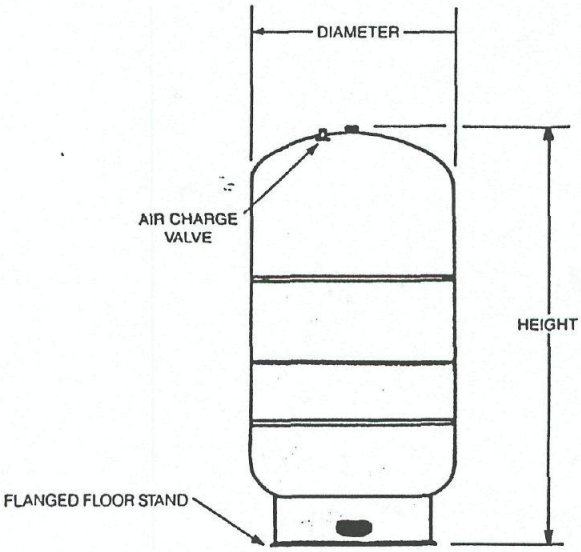

Model No.	Tank Volume (Gallons)	Max. Accept. Volume (Gallons)	Max. Working Pressure (PSIG)	Diameter (Inches)	Height (Inches)	System Connection	Shipping Weight
~~WX-302~~	~~86~~	~~46~~	~~100~~	~~26~~	~~47 3/16~~	~~1 1/4" NPTF~~	~~118 lbs.~~
WX-350	119	46	100	26	61 7/8	1 1/4" NPTF	161 lbs.

AMTROL INC.
1400 DIVISION ROAD
W. WARWICK, R.I. 02893

Printed in U.S.A.

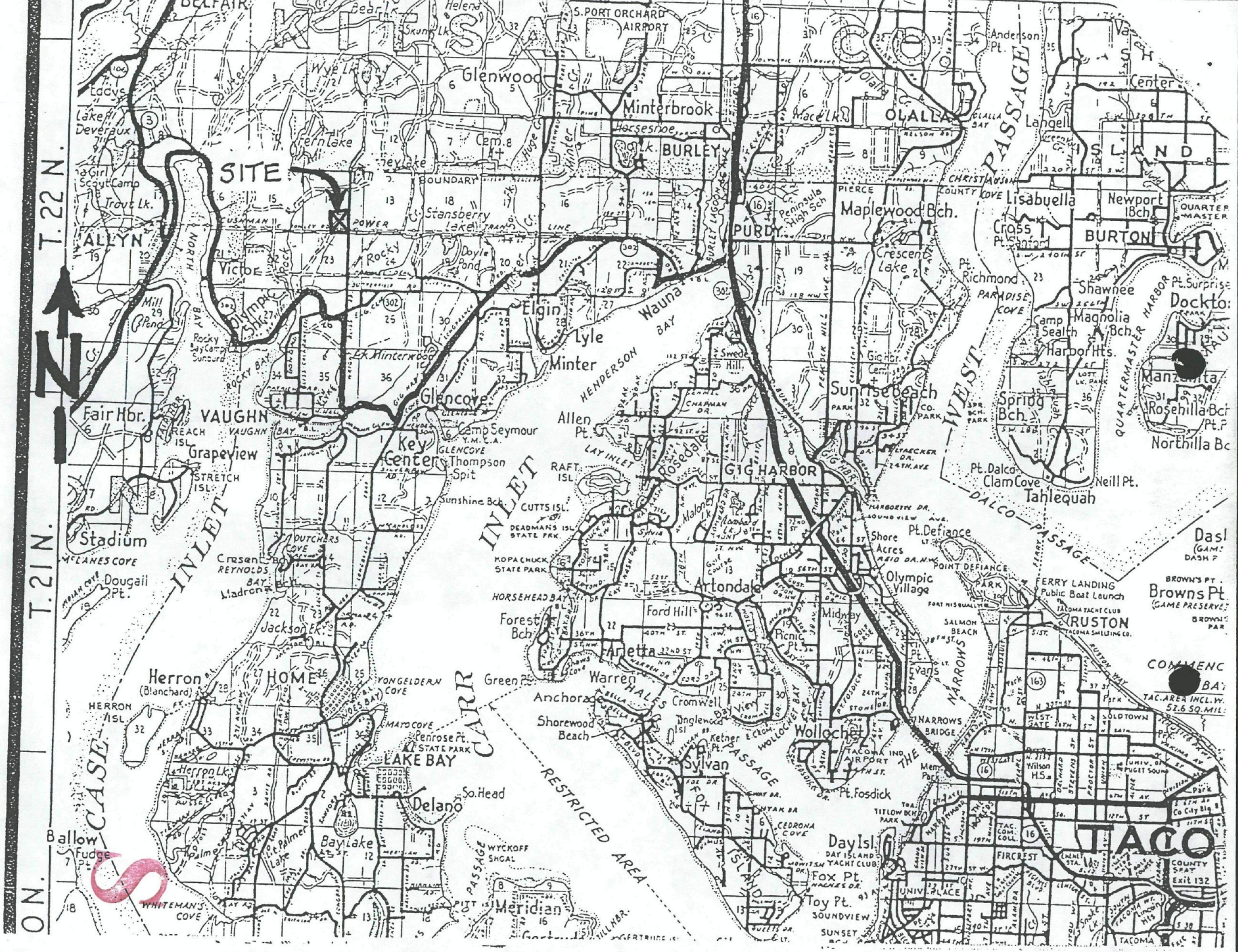
SITE
T. 22 N.
T. 21 N.
N
BELFAIR
S. PORT ORCHARD AIRPORT
Glenwood
Minterbrook
OLALLA
BURLEY
PURDY
Maplewood Bch.
Lisabuella
Newport Bch.
BURTON
Crass Pt.
Shawnee
Magnolia Bch.
Harbor Hts.
Spring Bch.
Sunrise Beach
Manzanita
Rosehilla Bch
Northilla Bc
Pt. Richmond
Crescent Lake
Pt. Dalco
Clam Cove
Tahlequah
Neill Pt.
Pt. Defiance
Shore Acres
Olympic Village
Point Defiance Park
Ferry Landing Public Boat Launch
Browns Pt.
RUSTON
Salmon Beach
Narrows Bridge
Vans
Wollochet
Tacoma Ind. Airport
Pt. Fosdick
Day Isl.
Fox Pt.
Toy Pt.
Sylvan
Ketner Pt.
Anchorage
Shorewood Beach
Warren
Cromwell
Englewood Isl.
Arletta
Forest Bch.
Ford Hill
Artondale
Midway
Picnic Pt.
GIG HARBOR
Allen Pt.
Rosedale
Elgin
Lyle
Minter
Wauna
Glencove
Camp Seymour
Key Center
Thompson Spit
Sunshine Bch.
Grapeview
Stretch Isl.
Fair Hbr.
VAUGHN
Stadium
Dougall Pt.
Madron
Jackson Lk.
Herron (Blanchard)
HOME
Penrose Pt. State Park
LAKE BAY
Delano
So. Head
Bay Lake
Meridian
Ballow
Fudge
Allyn
Victor
Olympic Shk.
Mill Pond
Rocky Bay Camp Sunburd
Girl Scout Camp
Trout Lk.
Lake Deveraux
Fernlake
Stansberry Lake
Doyle Pond
Lk. Minterwood
Horsehead Lk.
Cem. 8
Swede Hill
Gig Hbr. Cem.
Peninsula High Sch.
Langell
Center
Anderson Pt.
Olalla Bay
Olalla Lk.
Wye Lk.
Bear Lk.
Skunk Lk.
Helena
Tacoma
Dash
Browns Pt. (Game Preserve)
Commenc Bay
Tac. Area Incl. W. 52.6 Sq. Mil.
Narrows Bridge
Tacoma Ind. Airport
Day Island Yacht Club
Univ. Place
Fircrest
Tac. Com. Coll.
Wilson H.S.
Old Town
Univ. of Puget Sound
Co. City Bldg.
County Seat Exit 132
Tacoma
Restricted Area
Carr Inlet
Case Inlet
Henderson Inlet
Dalco Passage
West Passage
Quartermaster Harbor
Colvos Passage
Hales Passage
Wollochet Bay
Raft Isl.
Cutts Isl.
Deadmans Isl. State Park
Kopachuck State Park
Horsehead Bay
Herron Isl.
Wyckoff Shoal
Pitt Isl.
Gertrude Isl.
Cedrona Cove
Whiteman's Cove
Mary Cove
Yoeldern Cove
Dutchers Cove
McLanes Cove
Reynolds Bay
Lay Inlet
Chapman Dr.
Burley Lagoon
Pierce County
Christianson Cove
Paradise Cove
Pt. Surprise
Dockton
Quarter Master
Lost Lk. Park
Sealth
Pt. Defiance
Point Defiance Park
Tacoma Yacht Club
Tacoma Smelting Co.
Salmon Beach
Fort Nisqually
Day Island Yacht Club
Titlow Bch. Park
Mem. Park
Tacoma Wa. Lincoln Hts.