-NO SAND OR GRAVEL PILE RECOVERY – 100% G
-50% GRAVEL & 60% SAND PILE RECOVERY – 521 G

2. FLOW IS INTERMITTENT, AVERAGE RATE IS 55 GPM.
3. BELT PRESS @ 60% SOLIDS BY WT & CLARIFIER @ 30% SOLIDS BY WT.
4. PROCESS FLOWS TO THE GRAVEL WASH TOWER INCLU A 20 PERCENT SAFETY FACTOR.

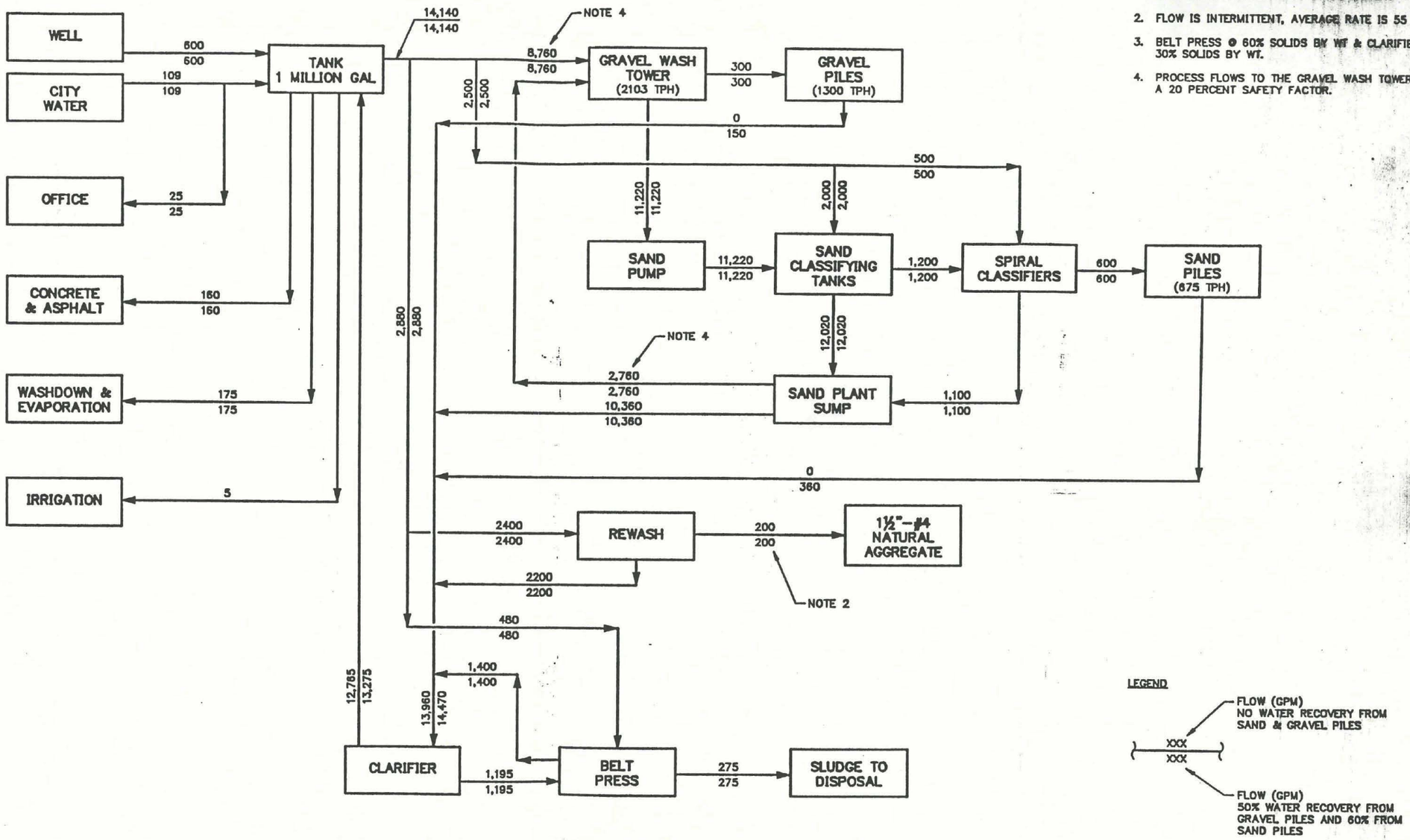

DRAWING NO.	TITLE	REVISIONS				
		REV	DATE	BY	APP'D	DESCRIPTION

SCALE	NONE	MO	DAY	YR
DRAWN	DCW	1	8	92
CHK'D				
APP'D				
APP'D				
APPROVED				

Harris Group

BLOCK FLOW DIAGRAM WITH BELT PRESS PLANT WATER

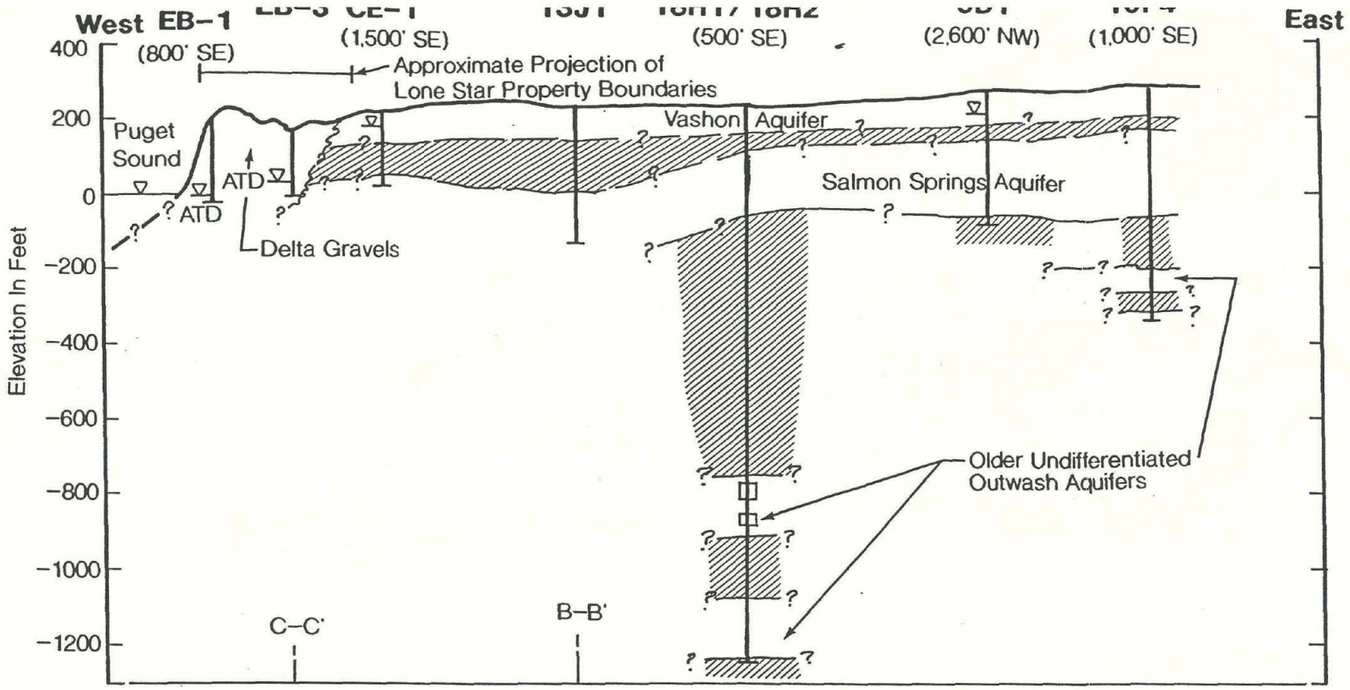

Note: 18H2 is replacement of 18H1. Screened intervals from 18H2. Log below elevation −880 feet from 18H1.

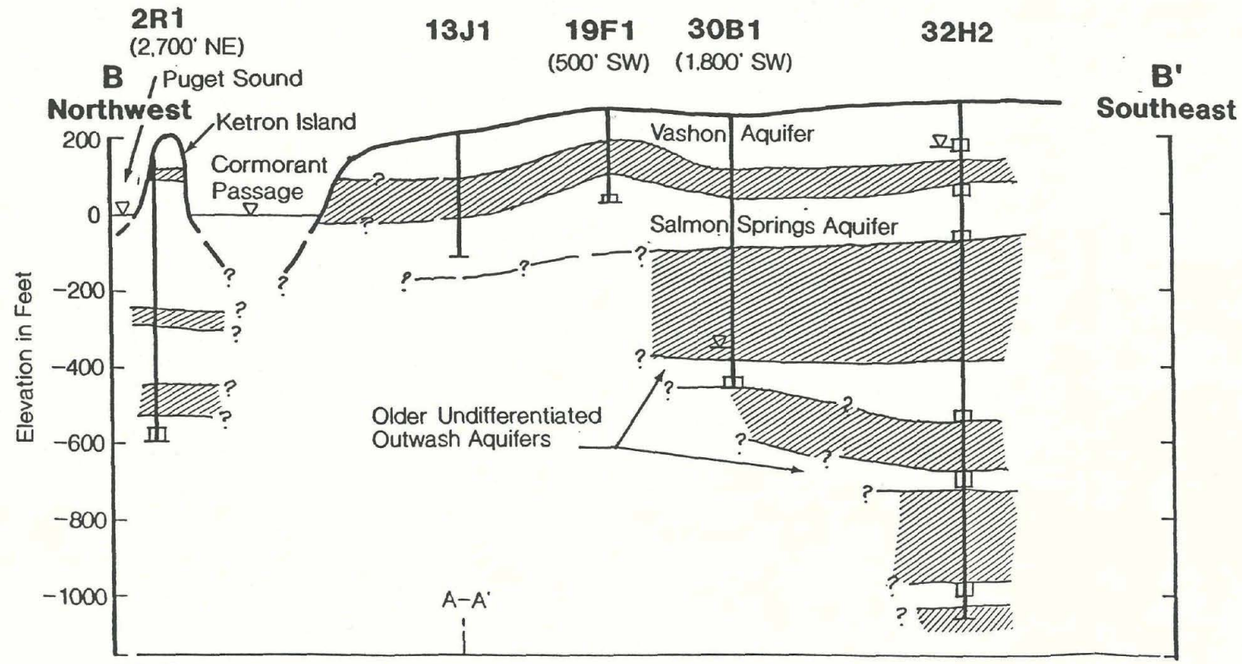

10F4 Subsurface Exploration Location and Number
(1000' SE) Offset Distance and Direction

ATD ▽ Water Level (ATD = At Time of Drilling)

Screened Intervals

Low Permeability Zone

Horizontal Scale in Miles
0 1 2
0 400 800

HARTCROWSER

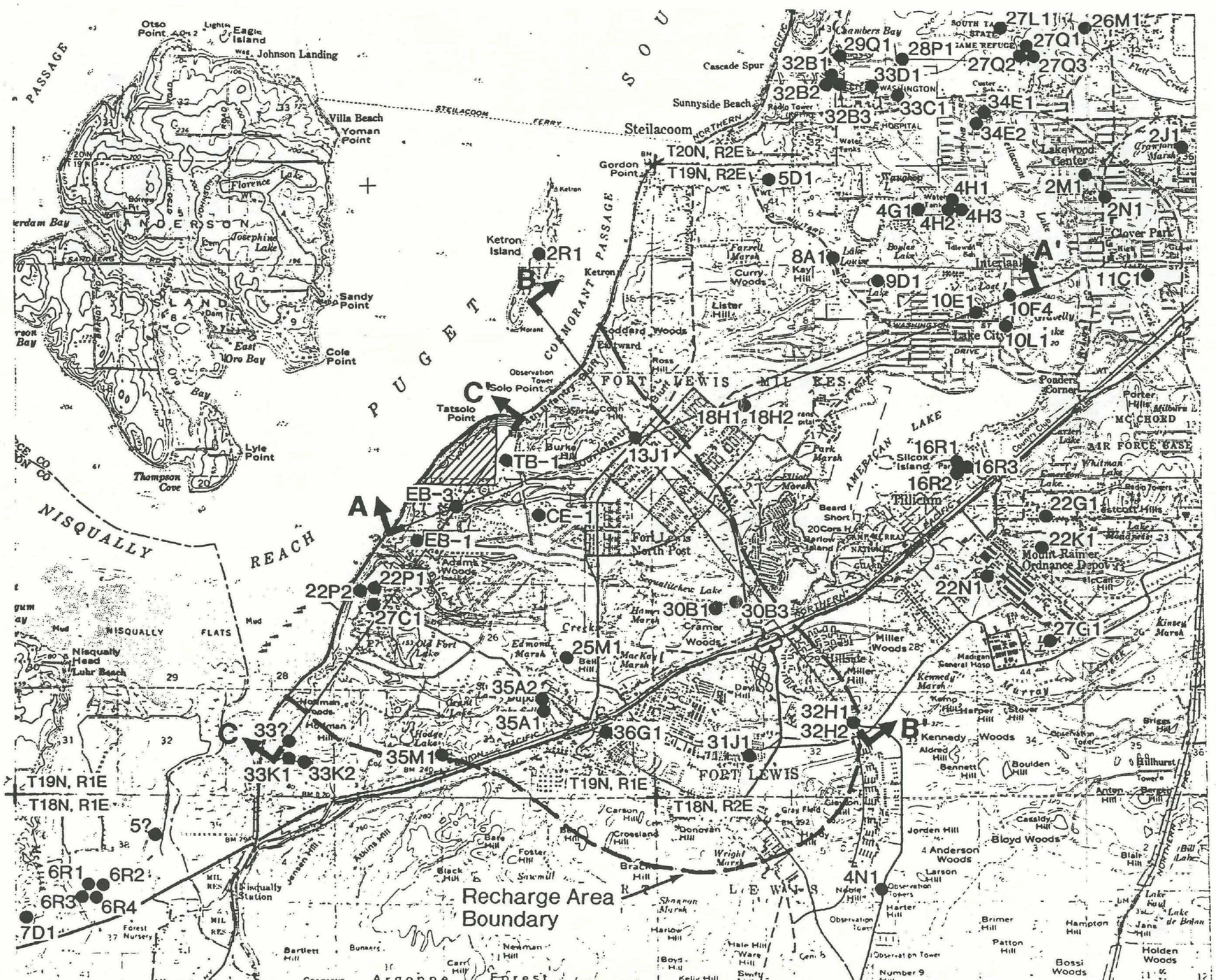

● 22P2 Selected Well/Boring Location and Number

A A' Geologic Cross Section Location and Designation

Pioneer Aggregate Site

Only wells greater than 200 feet deep are shown.

Base map prepared from USGS 15-minute quadrangle of Anderson Island, Washington, dated 1959.

N

0 1 2

Scale in Miles

HARTCROWSER