For Ecology Use
(Date Stamp)

RECEIVED
JAN 10 2012
WATER RESOURCES - NWRO

Ebright

DEPARTMENT OF ECOLOGY
State of Washington

Water Resources Program
Application for a Water Right Permit

■ SURFACE WATER ☐ GROUND WATER ☐ PERMANENT

■ TEMPORARY ■ SHORT TERM ☐ DROUGHT Re-Recurring

Follow the attached instructions. Attach additional sheets as necessary.

***A NON-REFUNDABLE MINIMUM FEE OF $50.00 MUST ACCOMPANY THIS APPLICATION.**

Section 1. APPLICANT

Applicant/Business Name: U.S. Fish and Wildlife Service, Washington Office	Phone No: 360.753.9440	Other No: 360.753.9582
Address: 510 Desmond Drive SE Suite 102		
City: Olympia	State Washington:	Zip: 98503
Email Address (optional): Yvonne_Dettlaff@fws.gov		

Contact Name (if different from above): Yvonne Dettlaff or Brad Thompson	Phone No: 360.753.9582	Other No: 360.753.9509
Relationship to Applicant: Yvonne: Fish and Wildlife Biologist or Brad: Fisheries Division Manager		
Address: See above		
City:	State:	Zip:
Email Address (optional): Yvonne_Dettlaff@fws.gov or Brad_Thompson@fws.gov		

Legal Land Owner or Part Owner Name of the Proposed Place of Use: Two potential water withdrawal sites are located along Ebright Creek. One site is located on the East Lake Sammamish Trail that is administrated by King County Parks and Recreation, and the other site is located on property owned by Walter Pereyra. Robert Nunnenkamp King County Parks and Recreation	Phone No: 206.263.6207	Other No:
Address: 201 South Jackson Street, Suite 700		
City: Seattle	State: WA	Zip: 98104-3856
Email Address (optional): Robert.Nunnenkamp@kingcounty.gov		
Legal Land Owner or Part Owner Name of the Proposed Place of Use: Walter Pereyra	Phone No: 206.915.0667	Other No:
Address: 148 East Lake Sammamish Pkwy SE		
City: Sammamish	State: WA	Zip: 98074

For Ecology Use	APPLICATION NO: S1-28714 SEPA: Exempt/Not Exempt Fee Paid: $50 Check No: 1207 ECY Coding: 001-001-WR1-0285-000011
Date Returned _____ By _____	Priority Date 1/10/12 By DB WRIA: 8

Email Address (optional): PSSAMM@PARKS.WA.GOV

Section 2. STATEMENT OF INTENT

Briefly describe the purpose of your proposed project:

The purpose of the proposed project is to prevent the Lake Sammamish kokanee (*Oncorhynchus nerka*) from extinction and improve the health of this native kokanee population. The long-term goal is have the Lake Sammamish kokanee as a viable and self-sustaining population.

Because the Lake Sammamish kokanee have declined dramatically, a comprehensive conservation strategy is needed to rebuild the remaining run. Part of that conservation strategy is to have a short term (one to five years) supplementation program that is necessary to sustain existing population levels. This includes maintaining the existing spatial distribution, abundance, age-structure, and genetic diversity of the Lake Sammamish kokanee population.

The short-term supplementation program involves collecting eggs from returning spawners (fish ready or nearly ready to spawn) and incubating them in a protective hatchery. Therefore, egg-to-fry survival rates will be greatly improved and likely help increase the adult population size. All steps of this program will be designed to mimic the natural conditions and behaviors of the population (i.e., run-timing and location, incubation temperatures, emergence timing, out-migrant timing) as closely as possible.

There are several components to the short-term Sammamish Kokanee Conservation Supplementation Project that includes monitoring, collecting, raising gametes, and then releasing kokanee fry in the Lake Sammamish watershed. The short-term supplementation project (i.e proposed project) is scheduled from 2010 to 2015.

Water Withdrawal Details

Once collection opportunities are identified volunteers, partners, or staff will use either block seines, dip nets, or if necessary, backpack electrofishing gear to collect late-run kokanee broodstock from Lake Sammamish tributaries. The Lake Sammamish tributaries include the Lewis, Ebright, and Laughing Jacob's creeks. Fish collection is from November through January. Spawners (fish ready or nearly ready to spawn) will be held in small tubs or ice chests and will be immediately transported to Issaquah Creek State Fish Hatchery. Once at the Issaquah Creek Fish Hatchery, fish will either be held until ripe, or gametes (milt and eggs) will be collected. Eggs will be incubated in the Issaquah State Hatchery. Once reaching the eyed-stage sometime in January and March, the eggs will be transferred to remote site incubators (RSIs) located at the Issaquah Fish Hatchery. Remote site incubators are essentially boxes or buckets that hold trays of eggs that have a consistent water flow.

Since broodstock collection will occur throughout the season (November to December), and thereby having eggs of different life stages, egg collection from each stream will be incubated in one to five remote site incubators. Given the size of the supplementation program (~30,000 eggs annually), 5 gallon units, which hold 5,000-10,000 eggs per unit, are likely to be selected for this effort. Flow rates will range from 3 to 4 gallons/minute for 5 gallon remote site incubators.

Water for the remote site incubators will come from the gametes' natal creek, Lewis, Ebright, or Laughing Jacob's creek. Unfiltered natal creek water will be pumped into a 300 to 600 gallon re-circulating tank, which first directs water through media filters, then to a UV light filter, and finally into a holding tank. The holding tank could be trough, raceway, or tank. Once the water is in the holding tank, water continuously circulates to each remote site incubator, then back to the UV light filter before flowing back to the holding tank. The figure below demonstrates what the remote site incubators series might look like.

For Ecology Use	APPLICATION NO:_____ SEPA: Exempt/Not Exempt Fee Paid:_____ Check No:_____ ECY Coding: 001-001-WR1-0285-000011
Date Returned _____ By_____ Priority Date _____ By_____ WRIA:_____	

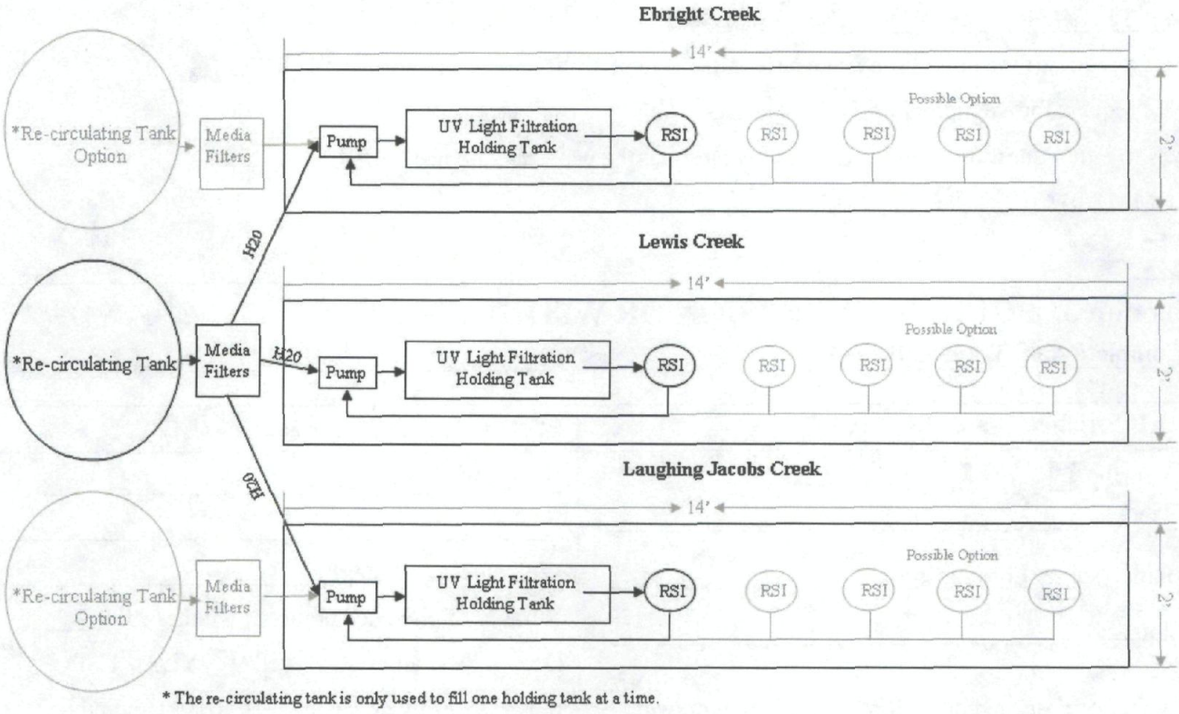

* The re-circulating tank is only used to fill one holding tank at a time.

An example of the RSIs series.

Each of the remote site incubator (RSI) series will be refreshed from weekly to bi-weekly by re-filling with fresh water that was collected exclusively from the creek that the eggs in a given RSI series are from. For the refreshment of each RSI, an approximate 200 to 600 gallons of water will be collected to refresh the RSI systems between December and early March from each of the three creeks where broodstock was collected (Lewis, Ebright, and Laughing Jacobs creeks). Prior to being refreshed, the filtered water in the RSI systems will be drained into Issaquah Creek. Water discharge is covered under the National Pollutant Discharge Elimination System (NPDES), WAG133010.

To collect water, a specially designed hatchery truck will siphon 200 to 600 gallons from each of the creeks. Using a 1-inch diameter flex hose, creek water will be pumped into a water tank on the truck. The flex hose will be screened to minimize debris, insects, and fish from entering the hose. The portable gas powered pump will withdraw water at a rate of 10 to 30 gallons per minute. Depending on flow conditions, water may be withdrawn slowly (over two hours) to keep sufficient water in the pool or riffle. Water withdrawal would occur either on the East Lake Sammamish Trail site or on property owned by Walter Pereyra. See attached map for project locations. The water truck will never enter the wetted width or drive or park on a vegetated stream bank (except grasses).

Anticipated length of time to complete your project: 5 years

Water Use List all purposes for which water will be applied to a beneficial use and list quantity required for each.

Purpose(s) of Use	Rate (check one box only) ☐ Cubic Feet per Second (CFS) ■ Gallons per Minute (GPM)	Acre-Feet per Year (AF/YR) (If known)	Period of Use (Continuously or Seasonal)
Collect water for a RSI series	10 to 30 gallons per minute 0.067 cfs		Seasonal from December to May. 200 to 600 gallons weekly to biweekly.
TOTAL:	10 to 30 gallons per minute		

For Ecology Use	APPLICATION NO:_____ SEPA: Exempt/Not Exempt Fee Paid:_____ Check No:_____ ECY Coding: 001-001-WR1-0285-000011
Date Returned _____ By _____ Priority Date _____ By _____ WRIA: _____	

Short Term/Temporary Water Use

Is this a request for a short term project (less than four months and non-recurring)? ☐ YES ■ NO

Is this request for a temporary permit? ■ YES ☐ NO

If yes to either question above, indicate the dates that the water will be needed:

FROM: 12/01/2010 TO: 05/30/2015

Section 3. POINT OF DIVERSION OR WITHDRAWAL

(Complete A or B, and C below)

A.) If Surface Water Source	B.) If Ground Water Source
☐ Spring ■ Creek ☐ River ☐ Lake ☐ Other:_____ Source Name: Ebright Creek Tributary to:_____ Number of proposed diversion points: 2 withdrawal sites Do you have an existing diversion? ☐ YES ☐ NO	☐ Well(s) ☐ Other:_____ _____ Well diameter & depth:_____ Number of proposed points of withdrawal:_____ Do you have an existing well? ☐ YES ☐ NO If available, attach Water Well Report and pump test. Well Tag ID No._____

C.) Point of Diversion/Withdrawal – Legal Description

Parcel No.	¼	¼	Section	Township	Range	County
3225069015	SW	NE	S32	T25N	R06E	KING

Lot(s)	Block(s)	Subdivision	SEE PROVIDED MAP

If known, enter the distances in feet from the point of diversion or withdrawal to the nearest section corner:

_____ Feet (☐ North/☐ South) and _____feet (☐ East/☐ West)

from the (☐NW ☐SW ☐NE ☐SE ☐ ____) corner of Section_____.

47.60844N/-122.0727 Lat/Long SEE ATTACHED MAP FOR MORE LOCATION INFORMATION.

Parcel No.	¼	¼	Section	Township	Range	County
3225069242	SW	NE	S32	T25N	R06E	KING

Lot(s)	Block(s)	Subdivision	

If known, enter the distances in feet from the point of diversion or withdrawal to the nearest section corner:

_____feet (☐ North/☐ South) and _____feet (☐ East/☐ West)

from the (☐NW ☐SW ☐NE ☐SE ☐____) corner of Section_____

47.60831N/-122.06945 SEE PROVIDED MAP FOR LOCATION.

NOTE: If more than two points of diversion/withdrawal attach additional information on a separate sheet of paper.

Do you own the land on which the proposed point of diversion/withdrawal is located? ☐ YES ■ NO
If no, do you have legal authority to make this application for use of another's land? ■ YES ☐ NO
Provide the owner name(s), address, and phone number: Robert Nunnenkamp, King County Parks and Recreation, 201 South Jackson St. Suite 700, Seattle, WA 98104-3856: 206.263.6216

Walter Pereyra, 148 East Lake Sammamish Pkwy SE, Sammamish, WA 98074: 206.915.0667

Section 4. PLACE OF USE

Attach a copy of the legal description of the property (on which the water will be used) taken from a real estate contract, property deed or title insurance policy, or copy it carefully in the space below.

For Ecology Use	APPLICATION NO:_____ SEPA: Exempt/Not Exempt Fee Paid:_____ Check No:_____ ECY Coding: 001-001-WR1-0285-000011
Date Returned _____ By_____ Priority Date _____ By_____ WRIA:_____	

As described above, water would be used for the remote site incubators (RSIs) located at the Issaquah Fish Hatchery (see attachment for map). The Issaquah Fish Hatchery is located along the Issaquah Creek at T24N R06E S28 SE1/4 in King County. Parcel numbers are 3324069023 and 3324069022. Property is just outside the City of Issaquah.

¼	¼	Section	Twp.	Range	County	Parcel No.
SE		S28	T24N	R06E	KING	3324069023 and 3324069022

Do you own all the lands on which the proposed place of use is located? ☐ YES ■ NO.

If no, do you have legal authority to make this application for use of another's land? ■ YES ☐ NO
Provide owner name(s), address, and phone number: Doug Hatfield Issaquah State Hatchery, 425.775.1311 ext. 109 or 206.719.3293 cell

Are there any other water rights or claims associated with this property or water system? ■ YES ☐ NO N/A

If yes, provide the water right and/or claim numbers: Issaquah Water Right 1330 Certificate. Ground Water Certificate 311

Attach a map of your project showing the point of diversion/withdrawal and place of use. If platted property, be sure to include a complete copy of the plat map.

See Attachments.

Section 5. WATER SYSTEM DESCRIPTION

Describe your proposed water system (include type and size of devices used to divert or withdraw water from source): To collect water, a specially designed hatchery truck will siphon 200 to 600 gallons from Ebright Creek. Using a 1-inch diameter flex hose, creek water will be pumped into a water tank on the truck. The flex hose will be screened to minimize debris, insects, and fish from entering the hose. The portable gas powered pump will withdraw water at a rate of 10 to 30 gallons per minute. Depending on flow conditions, water may be withdrawn slowly (over two hours) to keep sufficient water in the pool or riffle. Water withdrawal would occur either on the East Lake Sammamish Trail site or on property owned by Walter Pereyra. See attached map for project locations. The water truck will never enter the wetted width or drive or park on a vegetated stream bank (except grasses).

Section 6. DOMESTIC WATER SUPPLY SYSTEM INFORMATION

(Complete A or B, and C below)

A.) Domestic Water Systems only	**B.) Municipal Water Systems only** *(defined under RCW 90.03.015)*
Projected number of connections to be served: _____	Present population to be served water: _____
Type of connections: _____ *(e.g., home, recreational cabin)*	Estimate future population to be served: _____ (20 year projection)

C.) Water System Planning

Do you have a Water System Plan approved by the Washington State Department of Health, Drinking Water Division? ☐ YES ☐ NO

If yes, date plan was approved ____/____/____ Water System Number: _____

Name of water system: _____

Are you within the service area of an existing water system? ☐ YES ☐ NO

If yes, explain why you are unable to connect to the system: _____

_____

_____

_____

_____

Section 7. IRRIGATION/STOCKWATER/OTHER FARM USES

Irrigation

Total number of acres requested to be irrigated under this application = _____ACRES

NOTE: Outline the area to be irrigated on your attached map.

Stockwater

List number and kind of stock:_____

_____

_____

Is the proposed project for a dairy farm? ☐ YES ☐ NO

Other Proposed Farm Uses

Describe all proposed uses: _____

_____

_____

_____

Family Farm Water Act (RCW 90.66):

Calculate the acreage in which you have a controlling interest, including only:

- Acreage irrigated under water rights acquired after December 8, 1977,
- Acreage proposed to be irrigated under this application, and
- Acreage proposed to be irrigated under other pending application(s).

Is the combined acreage under existing rights greater than 6000 acres? ☐ YES ☐ NO

Do you have a controlling interest in a Family Farm Development Permit? ☐ YES ☐ NO

If yes, enter Permit No: _____

Section 8. OTHER WATER USES

Hydropower

Indicate total feet of head _____ and proposed capacity in kilowatts:_____

Describe works:_____

_____

_____

Indicate all uses to which power is to be applied:_____

FERC License No: _____

Mining/Industrial Use

Describe use, method of supplying and utilizing water:_____

_____

_____

Other Use

_____

_____

_____

_____

Section 9. WATER STORAGE

Will you be using a dam, dike, or other structure to retain or store water? ☐ YES ☐ NO

Are you proposing to store more than 10 acre-feet of water? ☐ YES ☐ NO

Will the water depth be 10 feet or more? ☐ YES ☐ NO

If you answered yes to any of the above questions, please describe:_____

NOTE: If you will be storing 10 acre-feet or more of water and/or if the water depth will be 10 feet or more at the deepest point and some portion of the storage will be above grade, you must also complete an Application for Permit to Construct a Reservoir and a Dam Construction Permit and Application.

Section 10. DRIVING DIRECTIONS

Provide detailed driving directions to the project site:_See attached maps for water withdrawal sites

Site Address:_____

Section 11. REQUIRED SIGNATURES

I certify that the information provided in this application is true and accurate to the best of my knowledge. I understand that in order to process my application, I grant staff from the Department of Ecology access to the site for inspection and monitoring purposes. Even though the employees of the Department of Ecology may have assisted me in the preparation of the above application, all responsibility for the accuracy of the information rests with me, the applicant.

Print Name (Applicant or authorized representative)	Signature	Date
Roxanna Tinzman		28 Oct 2011
Douglas G. HATFIELD		11/21/11
ROBERT NUNNENKAMP		12-6-11
WALTER PEREYRA		12-21-11

Please check the region in which the project is located:

***Submit your application to:**		
DEPARTMENT OF ECOLOGY CASHIERING SECTION PO BOX 47611 OLYMPIA, WA 98504-7611	☐ Central Regional Office 15 W Yakima Avenue, Suite 200 Yakima, WA 98902 (509) 575-2490	☐ Eastern Regional Office 4601 N. Monroe Spokane, WA 99205-1295 (509) 329-3400
	■ Northwest Regional Office 3190 – 160th Avenue SE Bellevue, WA 98008-5452 (425) 649-7000	☐ Southwest Regional Office PO Box 47775 Olympia, WA 98504-7775 (360) 407-6300

If you have questions about your application, contact the Water Resources program at the regional office in which your project is located.

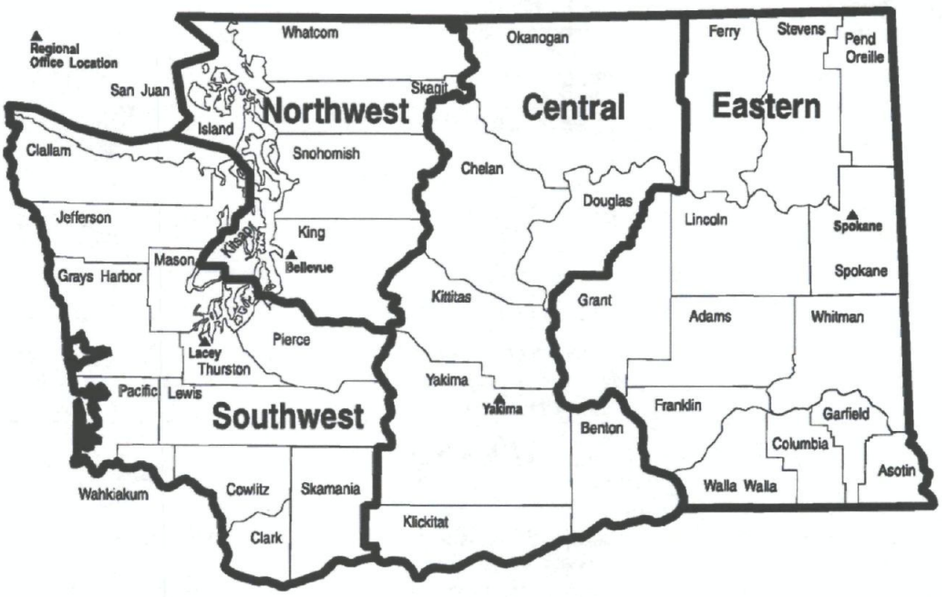

INSTRUCTIONS for the Application for a Water Right Permit

Please read these instructions carefully. Be accurate and complete in filling out your application, as the information you provide is very important in processing your application. Be sure to attach your fees, maps, and any additional information related to the water uses you are proposing.

If you need assistance, please contact the regional office in which your project will be located. A map of the Ecology regions is on the back page of the application. If your answers to any questions are longer than the space provided, you may attach additional sheets as necessary.

Check Boxes

Check the appropriate box for Surface or Ground Water.
Check the appropriate box for Permanent, Temporary, or Short Term use (duration of 4 months or less).

***Application Fee**

- A minimum fee of $50.00 is required for each new application for a water right permit.
- No fees are required for applications to be processed under a Cost Reimbursement contract.
- No fees are required for Emergency Drought Applications (only when a drought is declared).

If additional fees are required, Ecology will send you a letter requesting those fees. If you are unsure of the appropriate fee amount, contact your regional office for more information, or visit our website: <http://www.ecy.wa.gov/programs/wr/rights/wr_fees.html>.

Please make checks or money orders payable to the "Department of Ecology." Cash cannot be accepted. ALL FEES ARE NONREFUNDABLE.

Section 1. APPLICANT

Enter the name of the person, organization, or water system for which the water right permit is requested. For instance, if the permit is required for a community water system, enter the name of the system (e.g. Green Acres Water Works). Enter a mailing address, including zip, daytime telephone, an alternate or cell phone number, and an Email address (if you have one).

Provide the name of a contact person (if different from above) to call in case we have questions about the application or proposed project. Describe the relationship of the contact person to the applicant, e.g. "consultant," "water systems engineer," "realtor," "chair of community well organization," etc.

Enter the name of the legal or part owner (person or business) of the land where the water is to be used. Enter a mailing address, including zip, daytime telephone, an alternate or cell phone number, and an Email address (if available).

Section 2. STATEMENT OF INTENT

Provide a brief description of the purpose of your proposed project and the anticipated length of time to complete the project.

Water Use