Tank Side Cesium Removal Process System Flow Analysis

Prepared by

JF Gallegos
AVANTech, Inc. (by ARES Corporation) for Washington River Protection Solutions, LLC

Date Published
July 2019

Prepared for the U.S. Department of Energy
Office of River Protection

Contract No. DE-AC27-08RV14800

ARES CORPORATION	**CALCULATION COVER SHEET**	Page No. 1 of 115 Date 7/22/2019 — Rev. No. 0 Calculation No: 079701.18.01-M-001

Project No.	Project Title:	Client:
079701.18.01	Tank Side Cesium Removal Skid Analyses	AVANTech

Title:
Tank Side Cesium Removal Process System Flow Analysis

Purpose and Objective:
The purpose of this calculation is to evaluate the performance envelope of the Tank Side Cesium Removal (TSCR) unit located in the 241-AP tank farm, size the TSCR inlet flow control valve, and size the TSCR outlet pressure control valve.

KODI WILLIAM DIXON
STATE OF WASHINGTON
57775
REGISTERED
PROFESSIONAL ENGINEER
8/16/19

Rev. No.	Total Pages		Prepared By	Checked By	PM/TL
0	115	Print Name/ Sign:	JF Gallegos	KW Dixon	MA White
		Date:	7/22/19	7-22-19	7/24/19

Revision Description (Revision Description/Affected Pages):
Initial release.

		Print Name/ Sign:			
		Date:			

Revision Description (Revision Description/Affected Pages):

CALCULATION REVIEW CHECKLIST

Project No.	Calculation No.	Rev. No.	Page No.
079701.18.01	079701.18.01-M-001	0	2 of 115

Items Checked	Accept Y	Accept N	Accept N/A	Description of Resolution for Unacceptable Items
1. Cover sheets properly completed.	√			
2. Calculation sheet headers complete with calculation number, revision number, etc.	√			
3. Calculation sheet contents are legible, accurate, and complete per format.	√			
4. Listed attachments included.	√			
5. Calculation objective clearly described.	√			
6. Criteria are suitable and properly referenced to task specific documents.	√			
7. Assumptions and input data, selected, described, reasonable, and attached or referenced to task documents.	√			
8. Calculation method identified and appropriate for the design activity.	√			
9. Calculation results reasonable and correctly described in results and conclusions.	√			
10. Physical property calculations generated by CAD software verified via hand calculations.			√	
11. Computer program identified with version and revision.	√			
12. Computer input/output provided or referenced and reasonable.	√			
13. Computer run traceable to calculation (file #, etc.).	√			
14. Computer input/output data and problem type within validation/verification range of use.	√			
15. Computer program validation/verification addressed.	√			
16. Computer operating system in use for calculation preparation is the same as when the software was verified on machine.	√			

Calculation Checking Method	√	Applicable Pages
1. Direct Step-by-Step Check	√	All
2. Reference Chart(s) or Book(s) Comparison (Append Documentation)		
3. Alternate Calculation (Append Documentation)		

Comments:
None

Preparer (Print Name and Sign):	Date:
JF Gallegos	7/22/19
Checker (Print Name and Sign):	**Date:**
KW Dixon	7-22-19

Signatures obtained only after discrepancies are corrected and comments are resolved.

CALCULATION SHEET

Project No. S079701.18.01	Calculation No. S079701.18.01-M-001	Rev. 0	Page No. 3 of 115
Title: Tank Side Cesium Removal Process System Flow Analysis			
Prepared By: JF Gallegos	Date: 7/22/19	Checked By: KW Dixon	Date: 7/22/19

TABLE OF CONTENTS

1.0 PURPOSE 5

2.0 METHODOLOGY 5
- 2.1 System Model 5
  - 2.1.1 Design Head Loss 5
  - 2.1.2 Flow Control Valve Sizing 6
  - 2.1.3 Pressure Control Valve and Orifice Sizing 6
  - 2.1.4 Constant Inputs 6
  - 2.1.5 TSCR Component Losses 7

3.0 DESIGN INPUTS 7

4.0 ASSUMPTIONS 9

5.0 COMPUTER SOFTWARE 9

6.0 RESULTS 10
- 6.1 Model Results 10
- 6.2 Valve Sizing Results 11

7.0 REFERENCES 12

Appendices

APPENDIX A
FATHOM MODEL FOR LOW HEAD LOSS

APPENDIX B
FATHOM MODEL FOR HIGH HEAD LOSS

APPENDIX C
FATHOM MODEL INPUTS FOR LOW HEAD LOSS

APPENDIX D
FATHOM MODEL INPUTS FOR HIGH HEAD LOSS

APPENDIX E
FATHOM MODEL OUTPUTS FOR LOW HEAD LOSS

APPENDIX F
FATHOM MODEL OUTPUTS FOR HIGH HEAD LOSS

Attachments

ATTACHMENT 1
EMAIL TO DETERMINE DENSITY AND DYNAMIC VISCOSITY

ATTACHMENT 2
CONTROL VALVE CUT SHEET

CALCULATION SHEET

Project No. S079701.18.01	Calculation No. S079701.18.01-M-001	Rev. 0	Page No. 4 of 115
Title: Tank Side Cesium Removal Process System Flow Analysis			
Prepared By: JF Gallegos	Date: 7/22/19	Checked By: KW Dixon	Date: 7/22/19

ATTACHMENT 3
CONTROL VALVE SIZING CALCULATION

Tables

Table 2-1. TSCR Component Losses at 5 gpm 7
Table 6-1. Model Results 10
Table 6-2. Cavitation Check Results 11

Figures

Figure 6-1. Simplified Model with Labels 10

Acronyms

AOV	Air Operated Valve
ATM	Atmosphere
cP	centipoise
dH	Differential Head
FCV	Flow Control Valve
ft	Feet
gpm	Gallons Per Minute
HIHTL	Hose-In-Hose Transfer Line
IXC	Ion Exchange Column
lbf	Pound Force
PCV	Pressure Control Valve
psid	Pounds Per Square Inch Differential
TSCR	Tank Side Cesium Removal

CALCULATION SHEET

Project No. S079701.18.01	Calculation No. S079701.18.01-M-001	Rev. 0	Page No. 5 of 115
Title: Tank Side Cesium Removal Process System Flow Analysis			
Prepared By: JF Gallegos	Date: 7/22/19	Checked By: KW Dixon	Date: 7/22/19

1.0 PURPOSE

The purpose of this calculation is to evaluate the performance envelope of the Tank Side Cesium Removal (TSCR) unit located in 241-AP tank farm, size the TSCR inlet flow control valve, and size the TSCR outlet pressure control valve.

2.0 METHODOLOGY

2.1 System Model

The general layout of the TSCR system can be seen in H-14-111241. The model starts at the pump located in AP Farm at pit 241-AP-07F. Flow travels through two jumpers and exits the pit heading east towards the TSCR unit via Hose-in-Hose Transfer Lines (HIHTL). The HIHTL is connected to the TSCR unit, where the waste is either returned to 241-AP-107 or processed and then sent to 241-AP-106. A small fraction of flow (~5 gpm) is bled off through the TSCR unit via WP-FCV-306, where the processed waste is then returned to 241-AP-106. The remainder of the flow is directed to the recirculation leg prior to the flow control valve and returned to 241-AP-107. This calculation focuses on the waste flow through the TSCR unit process piping downstream of the inlet HIHTL and up to the reducer prior to the exit HIHTL.

The TSCR unit contains various major components for treating the waste such as (2) Filters, (3) Ion-Exchange Columns (IXC), (1) Media trap and (1) delay tank. The flow that is directed through the TSCR unit may pass through these components in various combinations depending on operations and the lead-lag or lead-lag-polish operation of the IXCs. These potential combinations are based on the following two operating philosophies per RPP-RPT-61220: 1) Only one Filter will be in operation at any one time, and 2) any serial combination of the IXC may be valved into operation at a time during a lead-lag-polish configuration (i.e. A to B to C, B to C to A, or C to A to B). During only a lead-lag configuration any one IXC may be removed while the other two remain in operation. Once passing through a Filter and IXCs the route goes through a media trap and a delay tank. At the end of the TSCR unit is pressure control valve WP-PCV-557 with a set pressure of 50 psig, then through an orifice before flowing to 241-AP-106.

2.1.1 Design Head Loss

Design head loss considers the highest and lowest head loss resistance parameters.

2.1.1.1 High Head Loss

The highest head loss scenario considers the worst case flow path with the components at their highest pressure loss conditions (i.e. dirty). As identified above the TSCR unit may operate with all three IXCs in a lead-lag-polish configuration (i.e. A to B to C, B to C to A, or C to A to B). The head losses for all three route configurations were investigated and it was determined that the worst case route (i.e. highest head loss) is when starting at WP-IX-400C.

2.1.1.2 Low Head Loss

The lowest head loss scenario considers the best case flow path with the components at their lowest pressure loss conditions (i.e. clean). As identified above the TSCR unit may operate with two IXCs in a lead-lag configuration (i.e. A to B, B to C, or C to A). The head losses for all three route configurations were investigated and it was determined that the best case route (i.e. lowest head loss) is when starting at WP-IX-400A.

2.1.2 Flow Control Valve Sizing

Flow control valve (WP-FCV-306) located in the TSCR unit is automatically operated to maintain flow through the TSCR unit at 5 gpm. Sizing of this valve is performed by calculating the maximum flow coefficient value (Cv) required at the high head loss so that a valve can be selected. Using the selected valve, the minimum Cv is then determined to obtain 5 gpm through the TSCR unit at the minimum head loss so that cavitation can be checked (see Attachment 3). The required Cv varies based on high and low head loss system parameters such as tank liquid levels, TSCR component losses, and fluid properties.

For determining the maximum Cv value (i.e. largest % open) required the high head loss parameters and a flow rate of 5 gpm are used. High head loss parameters are as follows: (1) empty AP-107 tank, (2) highest pressure differential across the TSCR unit (3 IXCs and dirty components), (3) high fluid viscosity, and (4) low fluid density.

For determining the minimum Cv value (i.e. smallest % open) required the low head loss parameters and a flow rate of 5 gpm are used. Low head loss parameters are as follows: (1) full AP-107 tank, (2) lowest pressure differential across the TSCR unit (2 IXCs and clean components), (3) low fluid viscosity, and (4) high fluid density.

2.1.3 Pressure Control Valve and Orifice Sizing

Pressure control valve (WP-PCV-557) and orifice are in series and located near the treated effluent outlet of the TSCR unit. The orifice was sized to maintain approximately 20 psi of back pressure at 5 gpm. This back pressure will help to prevent WP-PCV-557 from cavitating. The Cv from the pressure control valve is obtained for both the high head loss and low head loss scenarios. Once the required Cv is identified, a Flowtek V-port valve is selected.

2.1.4 Constant Inputs

Variances in pipe/hose/HIHTL inside diameters, fluid temperature and sending/receiving tank head-space vacuum levels have minimal effect on the results of this evaluation. For the items listed above a nominal value is used regardless of them having a range. Also, note that intermediate elevations in the pipeline have negligible effect on the results as well.

2.1.5 TSCR Component Losses

The pressure loss of each major TSCR component is modeled per EN-1813-02, *TSCR – Process Component Differential Pressures*, and summarized in the table below. Table 7 of EN-1813-02 provides pressure loss values for all major TSCR components when flowing 5 gpm for both new/clean and at alarm set points. Based on these pressure loss values a clean and "dirty" (i.e. alarm set point) resistance curve is created for each component using AFT Fathom's fill as quadratic feature based on 5 gpm. This methodology is based on pressure losses through the TSCR components behaving quadratically with respect to flow. Note that EN-1813-02 indicates that IXC pressure loss will behave more linearly with respect to flow rate. However, this will not affect this analysis since only 5 gpm flow rates are evaluated. Note that pressure loss due to the delay tank is negligible.

Table 2-1. TSCR Component Losses at 5 gpm.

Scenarios	Filter (psid)	Ion Exchange 1 (psid)	Ion Exchange 2 (psid)	Ion Exchange 3 (psid)	Media Trap (psid)
Low Head	1	8	6	0	1
High Head	3	15	15	8	5

General Note: See Design Inputs for all variable references.

3.0 DESIGN INPUTS

1. Fluid properties are per Attachment 1:

    a. Density for low and high head loss scenarios are 1.28 g/mL and 1.25 g/mL respectively.

    b. Absolute/dynamic viscosity for low and high head loss scenarios are 2 cP and 5 cP respectively.

    Note that fluid temperatures are not considered in the density or absolute/dynamic viscosity. Fluid temperature by itself has minimal effect on system sizing.

2. All pipe inside of the TSCR unit is modeled as carbon steel, with an absolute roughness of 0.0018 inches per Crane pg. A-24. This is conservatively higher than the default Fathom stainless steel roughness since the default value could not be independently verified.

3. Rubber hose, which connects TSCR piping to the Filters and Ion Exchange Columns is modeled with the same roughness as a HIHTL with an absolute roughness of 0.00126 inches (RPP-22668). Small variances of this input will have negligible impact on this analysis due to the small percentage of hose in the model.

4. Nominal flow through TSCR unit is 5 gpm (Ref., RPP-RPT-60603, Table 2-2).

5. The piping within the TSCR unit is modeled per H-14-111270. Line lengths are based on elbow to elbow distances assuming right angles and are rounded to the nearest 0.5 ft.

CALCULATION SHEET

Project No. S079701.18.01	Calculation No. S079701.18.01-M-001	Rev. 0	Page No. 8 of 115
Title: Tank Side Cesium Removal Process System Flow Analysis			
Prepared By: JF Gallegos	Date: 7/22/19	Checked By: KW Dixon	Date: 7/22/19

6. Fitting losses are input internally into the pipe and use AFT Fathom library K factors for elbows, tees, and manual valves.

7. Automated valves are modeled if required for simulating different flow paths through the unit. All automated valves on ½" piping are modeled as ½" Flowtek 7304 ball valves (per H-14-111270) with a full open Cv of 32 per manufacturer's data. If not modeled as a junction they are included internally into the pipe using Impulse K factors for 100% open ball valves.

8. The flow control valve (WP-FCV-306) coefficient curve is modeled as a 1/2-inch, Flow-Tek 15° V-control ball valve (Ref., Attachment 2).

9. Filter outlet design pressure drop is 1 psid and 3 psid for the low head loss and high head loss scenarios respectively at 5 gpm (EN-1813-02, Table 7).

10. Ion exchange unit 1 (IXC-1) outlet design pressure is 8 psid and 15 psid for low head loss and high head loss scenarios respectively at 5 gpm (EN-1813-02, Table 7).

11. Ion exchange unit 2 (IXC-2) outlet design pressure is 6 psid and 15 psid for the low head loss and high head loss scenarios respectively at 5 gpm (EN-1813-02, Table 7).

12. Ion exchange unit 3 (IXC-3) outlet design pressure is 0 psid and 8 psid for the low head loss and high head loss scenarios respectively at 5gpm (EN-1813-02, Table 7).

13. Media trap outlet design pressure is 1 psid and 5 psid for the low head loss and high head loss scenarios respectively at 5 gpm (EN-1813-02, Table 7).

14. The pressure control valve WP-PCV-557 is modeled as a pressure sustaining valve (PSV) with a set pressure of 50 psig (Ref., H-14-024857). Modeling as a PSV rather than a pressure reducing valve (PRV) will ensure that the pressure upstream of the valve does not drop below 50 psig. The pressure control valve coefficient curve is modeled as a 1/2-inch, Flow-Tek 15° V-control ball valve (Ref, Attachment 2).

15. TSCR effluent outlet orifice WP-FO-563 size is (17/64") 0.26563 inches (H-14-111270, Sh. 1).

16. Process piping lengths, components and fittings are modeled per the following drawings:

    a. H-14-111270, All Sheets - *Piping Isometrics*

    b. H-14-111250, Sh. 1 – *Ion-Exchange Column*

    c. H-14-111251, Sh. 1 – *Filter*

    d. H-14-111252, Sh. 1 – *Delay Tanks*

    e. H-14-111253, Sh. 1 – *Media Trap*

17. All design inputs regarding process components outside of the TSCR unit are identified in RPP-CALC-62640, *Tank Side Cesium Removal Process Pump Flow Analysis*.

4.0 ASSUMPTIONS

Conservative assumptions not requiring verification are identified throughout the analysis.

5.0 COMPUTER SOFTWARE

The pipe flow modeling software, AFT Fathom™[1] Version 9.0 (2016.01.20) was used to model the piping system. This software is an engineering tool used in the evaluation of incompressible flow in pipe networks. The program was executed on a Dell™[2] computer having Service Tag No. 70YL1R1. This software has been validated through several hydraulic solution verification models that have been compared to published results (Ref., ARES V&V No. VV-16-11-020).

[1] Fathom is a registered trademark of Applied Flow Technology, Colorado Springs, Colorado.
[2] Dell Technologies, Dell, EMC, Dell EMC, and other trademarks are trademarks of Dell Inc. or its subsidiaries.

CALCULATION SHEET

Project No. S079701.18.01	Calculation No. S079701.18.01-M-001	Rev. 0	Page No. 10 of 115
Title: Tank Side Cesium Removal Process System Flow Analysis			
Prepared By: JF Gallegos	Date: 7/22/19	Checked By: KW Dixon	Date: 7/22/19

6.0 RESULTS

6.1 Model Results

A summary of the model results at various points (see Figure 6-1) is provided in Table 6-1 below.

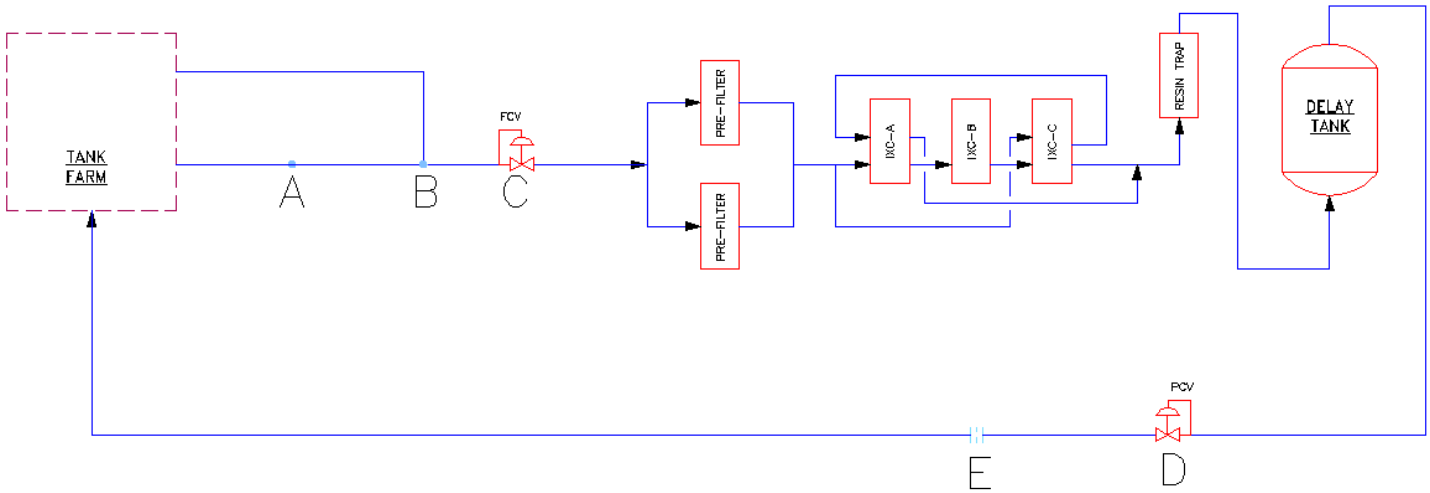

Figure 6-1. Simplified Model with Labels

Table 6-1. Model Results

Point	Description	Low Head	High Head
A	TSCR Inlet Flow (gpm)	65	61
A	TSCR Inlet Press. (psig)	188	164
B	TSCR Recirc Tee Press (psig)	187	164
C	WP-FCV-306 Flow (gpm)	5	5
C	WP-FCV-306 Inlet Press (psig)	187	164
C	WP-FCV-306 dP (psid)	104	43
C	WP-FCV-306 (Cv)	0.55	0.86
C	WP-FCV-306 Percent Open (%)	35.0	45.9
D	WP-PCV-557 Outlet Press (psig)	18	18
D	WP-PCV-557 (Cv)	0.99	0.99
D	WP-PCV-557 Percent Open (%)	50.22	50.17
E	TSCR Outlet Orifice dP (psid)	16	15
Design Input	Dynamic Viscosity (cP)	2	5
Design Input	Density (kg/liter)	1.28	1.25

CALCULATION SHEET

Project No. S079701.18.01	Calculation No. S079701.18.01-M-001	Rev. 0	Page No. 11 of 115
Title: Tank Side Cesium Removal Process System Flow Analysis			
Prepared By: JF Gallegos	Date: 7/22/19	Checked By: KW Dixon	Date: 7/22/19

6.2 Valve Sizing Results

Based on Table 6-1 above WP-FCV-306 will operate between approximately 35-46% open in the low and high head loss scenarios. WP-PCV-557 will operate at approximately 50% open in both the low and high head loss scenarios. Therefore, the selected valves identified in H-14-111270 are adequately sized to provide 5 gpm and 50 psig back pressure to the TSCR unit.

The results of the cavitation calculation in Attachment 3 are provided in the table below.

Table 6-2. Cavitation Check Results

Scenario	Valve	Actual Differential Pressure (psid)	Allowable Differential Pressure (psid)
Low Head	WP-FCV-306	104	170
High Head	WP-FCV-306	43	147
Low Head	WP-PCV-557	32	49
High Head	WP-PCV-557	32	49

Based on the results of the table above, the control valves will not cavitate and are okay for use in the TSCR unit.

CALCULATION SHEET

Project No. S079701.18.01	Calculation No. S079701.18.01-M-001	Rev. 0	Page No. 12 of 115
Title: Tank Side Cesium Removal Process System Flow Analysis			
Prepared By: JF Gallegos	Date: 7/22/19	Checked By: KW Dixon	Date: 7/22/19

7.0 REFERENCES

1. ARES Software Verification and Validation No. VV-16-11-020, *Verification and Validation of AFT Fathom Version 9.0 (2016.01.20)*, Rev. 0, (available upon request).
2. EN-1813-02, *TSCR – Component Differential Pressures*, Rev. 2, AVANTech Incorporated.
3. Crane, *Technical Paper 410, Flow of Fluids Through Valve, Fittings, and Pipe*, 2011, CRANE Co., Stamford, CN.
4. Emerson Process Management, *Control Valve Handbook*, Ed. 4th, Fisher Controls International, Marshalltown, IA.
5. H-14-024857, *TSCR P&ID Feed & Filtration*, Rev. 2, AVANTech Incorporated.
6. H-14-111241, Sh. 1, *Block Flow Diagram*, Rev. 0, AVANTech Incorporated.
7. H-14-111270, All Sheets, *TSCR Process Enclosure Piping Isometrics*, Rev. 1, AVANTech Incorporated.
8. H-14-111250, Sh. 1, *TSCR IXC-150 General Arrangement*, Rev. 2, AVANTech Incorporated.
9. H-14-111251, Sh. 1, *TSCR Filter (POR655-WP-FLT-325A/B) General Arrangement*, Rev. 2, AVANTech Incorporated.
10. H-14-111252, Sh. 1, *TSCR Delay Tank (WP-TK-550) General Arrangement Drawing*, Rev. 2, AVANTech Incorporated.
11. H-14-111253, Sh. 1, *TSCR Media Trap (WP-RT-500) General Arrangement*, Rev. 2, AVANTech Incorporated.
12. RPP-22668, *River Bend Transfer Systems Hose Roughness Calculation*, Rev. 0, Washington River Protection Solutions, Richland, WA.
13. RPP-CALC-62640, *Tank Side Cesium Removal Process Pump Flow Analysis*, Rev. 0, U.S. Department of Energy, Richland, WA.
14. RPP-RPT-61220, 2019, *Tank Side Cesium Removal (TSCR) Control Logic Narrative,* Rev. 0, AVANTech Incorporated.
15. Flow-Tek, *Ball Valves & Actuators Product Manual*, 2003, Bray International Inc., Houston, TX.

CALCULATION SHEET

Project No. S079701.18.01	Calculation No. S079701.18.01-M-001	Rev. 0	Page No. 13 of 115
Title: Tank Side Cesium Removal Process System Flow Analysis			
Prepared By: JF Gallegos	Date: 7/22/19	Checked By: KW Dixon	Date: 7/22/19

APPENDIX A

FATHOM MODEL FOR LOW HEAD LOSS

CALCULATION SHEET

Project No. 079701.18.01	Calculation No. 079701.18.01-M-001	Rev. 0	Page No. 14 of 115
Title: Tank Side Cesium Removal Process System Flow Analysis			
Prepared By: JF Gallegos	Date: 7/22/19	Checked By: KW Dixon	Date: 7/22/19

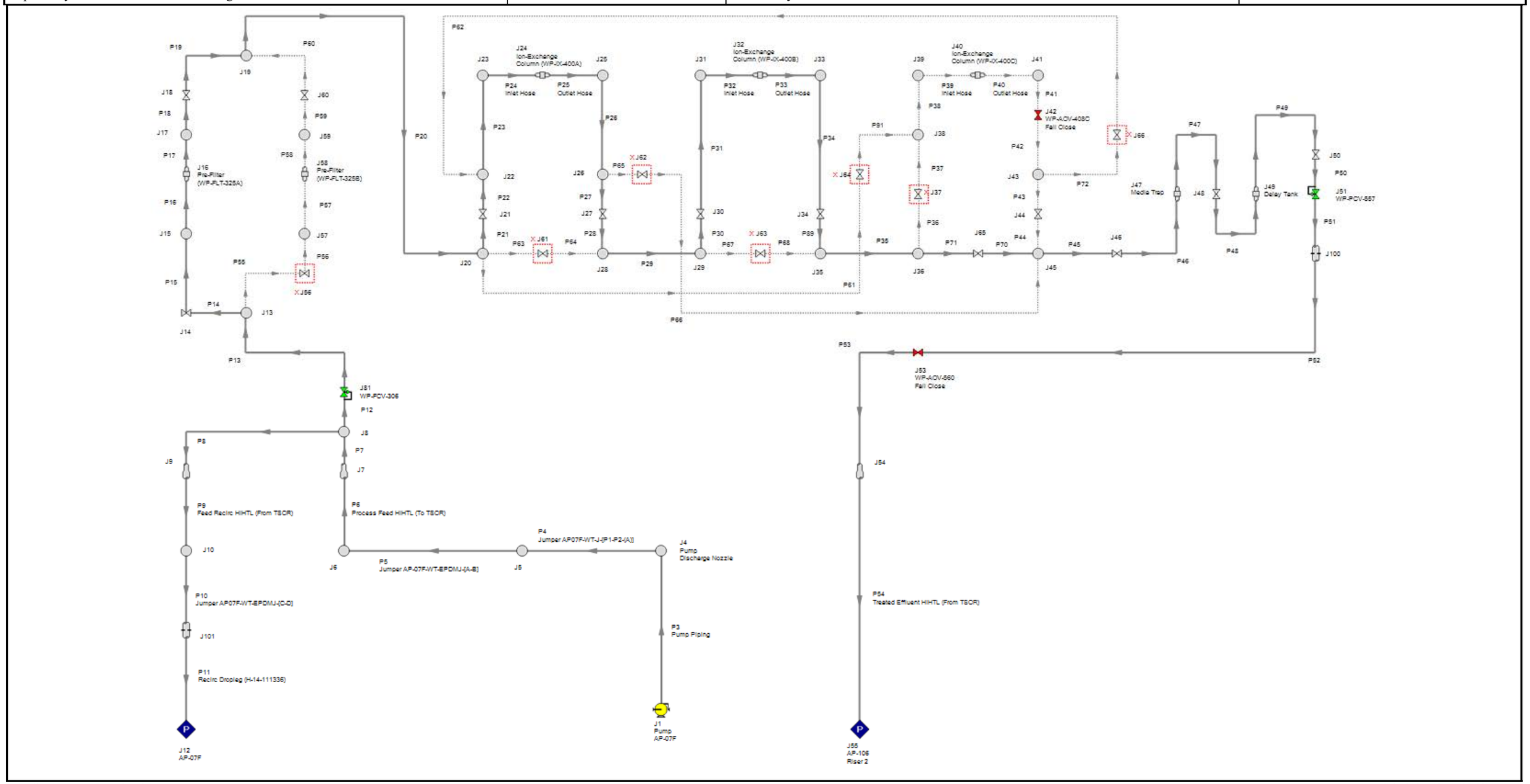

CALCULATION SHEET

Project No. 079701.18.01	Calculation No. 079701.18.01-M-001	Rev. 0	Page No. 15 of 115
Title: Tank Side Cesium Removal Process System Flow Analysis			
Prepared By: JF Gallegos	Date: 7/22/19	Checked By: KW Dixon	Date: 7/22/19

APPENDIX B

FATHOM MODEL FOR HIGH HEAD LOSS

CALCULATION SHEET

Project No. 079701.18.01	Calculation No. 079701.18.01-M-001	Rev. 0	Page No. 16 of 115
Title: Tank Side Cesium Removal Process System Flow Analysis			
Prepared By: JF Gallegos	Date: 7/22/19	Checked By: KW Dixon	Date: 7/22/19

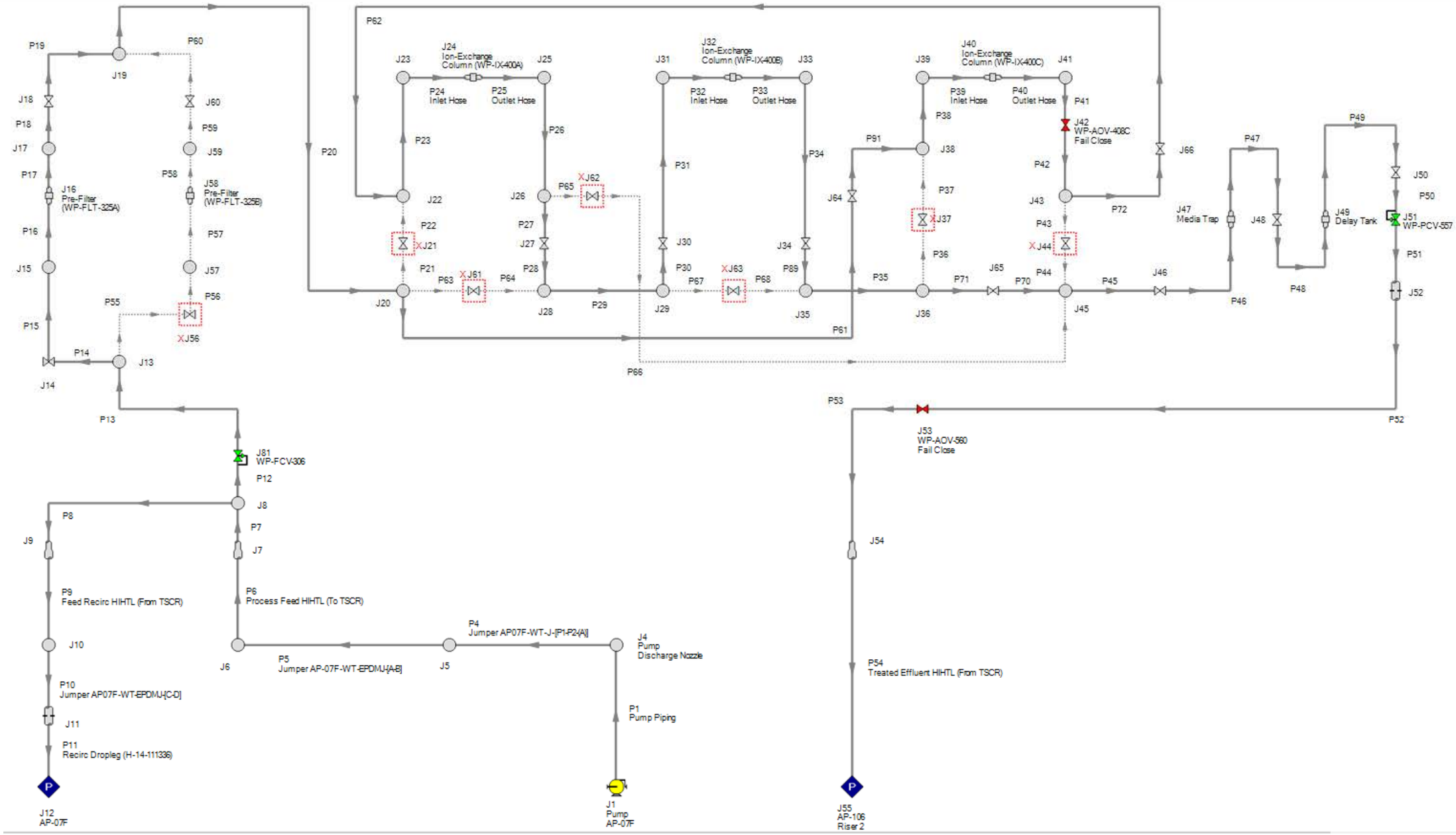

CALCULATION SHEET

Project No. 079701.18.01	Calculation No. 079701.18.01-M-001	Rev. 0	Page No. 17 of 115
Title: Tank Side Cesium Removal Process System Flow Analysis			
Prepared By: JF Gallegos	Date: 7/22/19	Checked By: KW Dixon	Date: 7/22/19

APPENDIX C

FATHOM MODEL INPUTS FOR LOW HEAD LOSS

CALCULATION SHEET

Project No. 079701.18.01	Calculation No. 079701.18.01-M-001	Rev. 0	Page No. 18 of 115
Title: Tank Side Cesium Removal Process System Flow Analysis			
Prepared By: JF Gallegos	Date: 7/22/19	Checked By: KW Dixon	Date: 7/22/19

AFT Fathom 9 (Model) 7/18/2019 Page 1	AFT Fathom Model	

General

Title: AFT Fathom Model
Input File: P:\Clients\Atkins Energy Federal EPC, Inc\078906.18.01 - Design of TSCR Upgrades\Calculations\Mechanical\M-002 \Rev 0\Fathom V&V\TSCR Pump Sizing.fth
Scenario: Base Scenario/Clean

Number Of Pipes= 71
Number Of Junctions= 65

Pressure/Head Tolerance= 0.0001 relative change
Flow Rate Tolerance= 0.0001 relative change
Temperature Tolerance= 0.0001 relative change
Flow Relaxation= (Automatic)
Pressure Relaxation= (Automatic)

Constant Fluid Property Model
Fluid Database: User Specified
Fluid= User Specified
Density= 1.28 kg/liter
Viscosity= 2 centipoise
Vapor Pressure= 7.52 psia
Viscosity Model= Newtonian
Apply laminar and non-Newtonian correction to: Pipe Fittings & Losses, Junction K factors, Junction Special Losses, Junction Polynomials
Corrections applied to the following junctions: Branch, Reservoir, Assigned Flow, Assigned Pressure, Area Change, Tee or Wye, Spray Discharge, Relief Valve

Ambient Pressure (constant)= 1 atm
Gravitational Acceleration= 1 g
Turbulent Flow Above Reynolds Number= 4000
Laminar Flow Below Reynolds Number= 2300

Pipes

Pipe	Name	Pipe Defined	Length	Length Units	Hydraulic Diameter	Hydraulic Diam. Units	Friction Data Set	Roughness
3	Pump Piping	Yes	2.2	feet	6.065	inches	Standard	0.0018
4	Jumper AP07F-WT-J-[P1-P2-(A)]	Yes	5	feet	2.067	inches	Standard	0.0018
5	Jumper AP-07F-WT-EPDMJ-[A-B]	Yes	45	inches	2	inches	Unspecified	0.00126
6	Process Feed HIHTL (To TSCR)	Yes	330	feet	2	inches	Unspecified	0.00126
7		Yes	3.5	feet	1.61	inches	Standard	0.0018
8		Yes	5.5	feet	1.61	inches	Standard	0.0018
9	Feed Recirc HIHTL (From TSCR)	Yes	335	feet	2	inches	Unspecified	0.00126
10	Jumper AP07F-WT-EPDMJ-[C-D]	Yes	55	inches	2	inches	Unspecified	0.00126
11	Recirc Dropleg (H-14-111336)	Yes	1	feet	2.067	inches	Standard	0.0018
12		Yes	0.5	feet	0.622	inches	Standard	0.0018
13	Pipe	Yes	3.5	feet	0.622	inches	Standard	0.0018
14	Pipe	Yes	0.5	feet	0.622	inches	Standard	0.0018

CALCULATION SHEET

Project No. 079701.18.01	Calculation No. 079701.18.01-M-001	Rev. 0	Page No. 19 of 115
Title: Tank Side Cesium Removal Process System Flow Analysis			
Prepared By: JF Gallegos	Date: 7/22/19	Checked By: KW Dixon	Date: 7/22/19

AFT Fathom 9 (Model)
7/18/2019
Page 2

AFT Fathom Model

Pipe	Name	Pipe Defined	Length	Length Units	Hydraulic Diameter	Hydraulic Diam. Units	Friction Data Set	Roughness
15	Pipe	Yes	2	feet	0.622	inches	Standard	0.0018
16	Pipe	Yes	3	feet	2.067	inches	Standard	0.0018
17	Pipe	Yes	3	feet	1.049	inches	Standard	0.0018
18	Pipe	Yes	2.5	feet	0.622	inches	Standard	0.0018
19	Pipe	Yes	0.5	feet	0.622	inches	Standard	0.0018
20	Pipe	Yes	7	feet	0.622	inches	Standard	0.0018
21	Pipe	Yes	0.5	feet	0.622	inches	Standard	0.0018
22	Pipe	Yes	1	feet	0.622	inches	Standard	0.0018
23	Pipe	Yes	1	feet	0.622	inches	Standard	0.0018
24	Inlet Hose	Yes	1.5	feet	1.049	inches	Standard	0.0018
25	Outlet Hose	Yes	2	feet	1.049	inches	Standard	0.0018
26	Pipe	Yes	2.5	feet	0.622	inches	Standard	0.0018
27	Pipe	Yes	0.5	feet	0.622	inches	Standard	0.0018
28	Pipe	Yes	0.5	feet	0.622	inches	Standard	0.0018
29	Pipe	Yes	2	feet	0.622	inches	Standard	0.0018
30	Pipe	Yes	0.5	feet	0.622	inches	Standard	0.0018
31	Pipe	Yes	2	feet	0.622	inches	Standard	0.0018
32	Inlet Hose	Yes	1.5	feet	1.049	inches	Standard	0.0018
33	Outlet Hose	Yes	2	feet	1.049	inches	Standard	0.0018
34	Pipe	Yes	3	feet	0.622	inches	Standard	0.0018
35	Pipe	Yes	2	feet	0.622	inches	Standard	0.0018
36	Pipe	Yes	0.5	feet	0.622	inches	Standard	0.0018
37	Pipe	Yes	0.5	feet	0.622	inches	Standard	0.0018
38	Pipe	Yes	1.5	feet	0.622	inches	Standard	0.0018
39	Inlet Hose	Yes	1.5	feet	1.049	inches	Standard	0.0018
40	Outlet Hose	Yes	2	feet	1.049	inches	Standard	0.0018
41	Pipe	Yes	1.5	feet	0.622	inches	Standard	0.0018
42	Pipe	Yes	0.5	feet	0.622	inches	Standard	0.0018
43	Pipe	Yes	1	feet	0.622	inches	Standard	0.0018
44	Pipe	Yes	0.5	feet	0.622	inches	Standard	0.0018
45	Pipe	Yes	4	feet	0.622	inches	Standard	0.0018
46	Pipe	Yes	1	feet	0.622	inches	Standard	0.0018
47	Pipe	Yes	4	feet	0.622	inches	Standard	0.0018
48	Pipe	Yes	8	feet	0.622	inches	Standard	0.0018
49	Pipe	Yes	5	feet	0.622	inches	Standard	0.0018
50	Pipe	Yes	6	feet	0.622	inches	Standard	0.0018
51	Pipe	Yes	1	feet	0.622	inches	Standard	0.0018
52	Pipe	Yes	32	feet	0.622	inches	Standard	0.0018
53	Pipe	Yes	2	feet	0.622	inches	Standard	0.0018
54	Treated Effluent HIHTL (From TSCR)	Yes	211	feet	2	inches	Unspecified	0.00126

CALCULATION SHEET

Project No. 079701.18.01	Calculation No. 079701.18.01-M-001	Rev. 0	Page No. 20 of 115
Title: Tank Side Cesium Removal Process System Flow Analysis			
Prepared By: JF Gallegos	Date: 7/22/19	Checked By: KW Dixon	Date: 7/22/19

AFT Fathom 9 (Model)
7/18/2019
Page 3

AFT Fathom Model

Pipe	Name	Pipe Defined	Length	Length Units	Hydraulic Diameter	Hydraulic Diam. Units	Friction Data Set	Roughness
55	Pipe	Yes	1	feet	0.622	inches	Standard	0.0018
56	Pipe	Yes	1.5	feet	0.622	inches	Standard	0.0018
57	Pipe	Yes	3	feet	2.067	inches	Standard	0.0018
58	Pipe	Yes	3	feet	1.049	inches	Standard	0.0018
59	Pipe	Yes	2.5	feet	0.622	inches	Standard	0.0018
60	Pipe	Yes	0.5	feet	0.622	inches	Standard	0.0018
61	Pipe	Yes	12	feet	0.622	inches	Standard	0.0018
62	Pipe	Yes	11.5	feet	0.622	inches	Standard	0.0018
63	Pipe	Yes	0.5	feet	0.622	inches	Standard	0.0018
64	Pipe	Yes	2	feet	0.622	inches	Standard	0.0018
65	Pipe	Yes	1	feet	0.622	inches	Standard	0.0018
66	Pipe	Yes	9.5	feet	0.622	inches	Standard	0.0018
67	Pipe	Yes	0.5	feet	0.622	inches	Standard	0.0018
68	Pipe	Yes	2.5	feet	0.622	inches	Standard	0.0018
70	Pipe	Yes	2	feet	0.622	inches	Standard	0.0018
71	Pipe	Yes	0.5	feet	0.622	inches	Standard	0.0018
72	Pipe	Yes	0.5	feet	0.622	inches	Standard	0.0018
89	Pipe	Yes	0.5	feet	0.622	inches	Standard	0.0018
91	Pipe	Yes	0.5	feet	0.622	inches	Standard	0.0018

Pipe	Roughness Units	Losses (K)	Initial Flow	Initial Flow Units	Junctions (Up,Down)	Geometry	Material	Size
3	inches	1.1974	49.00	gal/min	1, 4	Cylindrical Pipe	Steel - ANSI	6 inch
4	inches	2.226188			4, 5	Cylindrical Pipe	Steel - ANSI	2 inch
5	inches	2.546			5, 6	Cylindrical Pipe	User Specified	
6	inches	3.496	49.00	gal/min	6, 7	Cylindrical Pipe	User Specified	
7	inches	0.06168	49.00	gal/min	7, 8	Cylindrical Pipe	Steel - ANSI	1-1/2 inch
8	inches	0.34952	44.02	gal/min	8, 9	Cylindrical Pipe	Steel - ANSI	1-1/2 inch
9	inches	3.496	44.02	gal/min	9, 10	Cylindrical Pipe	User Specified	
10	inches	2.546			10, 101	Cylindrical Pipe	User Specified	
11	inches	1.50928	44.02	gal/min	101, 12	Cylindrical Pipe	Steel - ANSI	2 inch
12	inches	0.1763804	5.000	gal/min	8, 81	Cylindrical Pipe	Steel - ANSI	1/2 inch
13	inches	0.886744			81, 13	Cylindrical Pipe	Steel - ANSI	1/2 inch
14	inches	1.1			13, 14	Cylindrical Pipe	Steel - ANSI	1/2 inch

CALCULATION SHEET

Project No. 079701.18.01	Calculation No. 079701.18.01-M-001	Rev. 0	Page No. 21 of 115
Title: Tank Side Cesium Removal Process System Flow Analysis			
Prepared By: JF Gallegos	Date: 7/22/19	Checked By: KW Dixon	Date: 7/22/19

AFT Fathom 9 (Model)
7/18/2019
Page 4

AFT Fathom Model

Pipe	Roughness Units	Losses (K)	Initial Flow	Initial Flow Units	Junctions (Up,Down)	Geometry	Material	Size
15	inches	0.404336			14, 15	Cylindrical Pipe	Steel - ANSI	1/2 inch
16	inches	1.47732			15, 16	Cylindrical Pipe	Steel - ANSI	2 inch
17	inches	0.427668			16, 17	Cylindrical Pipe	Steel - ANSI	1 inch
18	inches	2.564336			17, 18	Cylindrical Pipe	Steel - ANSI	1/2 inch
19	inches	0			18, 19	Cylindrical Pipe	Steel - ANSI	1/2 inch
20	inches	1.504336			19, 20	Cylindrical Pipe	Steel - ANSI	1/2 inch
21	inches	2.2			20, 21	Cylindrical Pipe	Steel - ANSI	1/2 inch
22	inches	0.04			21, 22	Cylindrical Pipe	Steel - ANSI	1/2 inch
23	inches	0.118072			22, 23	Cylindrical Pipe	Steel - ANSI	1/2 inch
24	inches	2.998949			23, 24	Cylindrical Pipe	Steel - ANSI	1 inch
25	inches	0.957768			24, 25	Cylindrical Pipe	Steel - ANSI	1 inch
26	inches	0.2911789			25, 26	Cylindrical Pipe	Steel - ANSI	1/2 inch
27	inches	0.04			26, 27	Cylindrical Pipe	Steel - ANSI	1/2 inch
28	inches	1.1			27, 28	Cylindrical Pipe	Steel - ANSI	1/2 inch
29	inches	0			28, 29	Cylindrical Pipe	Steel - ANSI	1/2 inch
30	inches	1.1			29, 30	Cylindrical Pipe	Steel - ANSI	1/2 inch
31	inches	0.118072			30, 31	Cylindrical Pipe	Steel - ANSI	1/2 inch
32	inches	2.998949			31, 32	Cylindrical Pipe	Steel - ANSI	1 inch
33	inches	0.957768			32, 33	Cylindrical Pipe	Steel - ANSI	1 inch
34	inches	0.3311789			33, 34	Cylindrical Pipe	Steel - ANSI	1/2 inch
35	inches	0			35, 36	Cylindrical Pipe	Steel - ANSI	1/2 inch
36	inches	1.1			36, 37	Cylindrical Pipe	Steel - ANSI	1/2 inch
37	inches	0.04			37, 38	Cylindrical Pipe	Steel - ANSI	1/2 inch
38	inches	0.118072			38, 39	Cylindrical Pipe	Steel - ANSI	1/2 inch
39	inches	2.998949			39, 40	Cylindrical Pipe	Steel - ANSI	1 inch
40	inches	0.957768			40, 41	Cylindrical Pipe	Steel - ANSI	1 inch
41	inches	0.1331069			41, 42	Cylindrical Pipe	Steel - ANSI	1/2 inch
42	inches	0			42, 43	Cylindrical Pipe	Steel - ANSI	1/2 inch
43	inches	0.12			43, 44	Cylindrical Pipe	Steel - ANSI	1/2 inch
44	inches	1.1			44, 45	Cylindrical Pipe	Steel - ANSI	1/2 inch
45	inches	0.444336			45, 46	Cylindrical Pipe	Steel - ANSI	1/2 inch
46	inches	1.1			46, 47	Cylindrical Pipe	Steel - ANSI	1/2 inch
47	inches	0.768672			47, 48	Cylindrical Pipe	Steel - ANSI	1/2 inch
48	inches	1.093008			48, 49	Cylindrical Pipe	Steel - ANSI	1/2 inch
49	inches	0.768672			49, 50	Cylindrical Pipe	Steel - ANSI	1/2 inch
50	inches	1.173008			50, 51	Cylindrical Pipe	Steel - ANSI	1/2 inch
51	inches	0			51, 100	Cylindrical Pipe	Steel - ANSI	1/2 inch
52	inches	1.86168			100, 53	Cylindrical Pipe	Steel - ANSI	1/2 inch
53	inches	0			53, 54	Cylindrical Pipe	Steel - ANSI	1/2 inch
54	inches	1.615	5.000	gal/min	54, 55	Cylindrical Pipe	User Specified	

CALCULATION SHEET

Project No. 079701.18.01	Calculation No. 079701.18.01-M-001	Rev. 0	Page No. 22 of 115
Title: Tank Side Cesium Removal Process System Flow Analysis			
Prepared By: JF Gallegos	Date: 7/22/19	Checked By: KW Dixon	Date: 7/22/19

AFT Fathom 9 (Model) 7/18/2019 Page 5	AFT Fathom Model	

Pipe	Roughness Units	Losses (K)	Initial Flow	Initial Flow Units	Junctions (Up,Down)	Geometry	Material	Size
55	inches	0.404336			13, 56	Cylindrical Pipe	Steel - ANSI	1/2 inch
56	inches	1.1			56, 57	Cylindrical Pipe	Steel - ANSI	1/2 inch
57	inches	1.47732			57, 58	Cylindrical Pipe	Steel - ANSI	2 inch
58	inches	0.427668			58, 59	Cylindrical Pipe	Steel - ANSI	1 inch
59	inches	2.564336			59, 60	Cylindrical Pipe	Steel - ANSI	1/2 inch
60	inches	0			60, 19	Cylindrical Pipe	Steel - ANSI	1/2 inch
61	inches	2.92168			20, 64	Cylindrical Pipe	Steel - ANSI	1/2 inch
62	inches	1.464336			66, 22	Cylindrical Pipe	Steel - ANSI	1/2 inch
63	inches	0.08			20, 61	Cylindrical Pipe	Steel - ANSI	1/2 inch
64	inches	0.04			61, 28	Cylindrical Pipe	Steel - ANSI	1/2 inch
65	inches	1.14			26, 62	Cylindrical Pipe	Steel - ANSI	1/2 inch
66	inches	2.557344			62, 45	Cylindrical Pipe	Steel - ANSI	1/2 inch
67	inches	0.04			29, 63	Cylindrical Pipe	Steel - ANSI	1/2 inch
68	inches	0.04			63, 35	Cylindrical Pipe	Steel - ANSI	1/2 inch
70	inches	0.04			65, 45	Cylindrical Pipe	Steel - ANSI	1/2 inch
71	inches	0.04			36, 65	Cylindrical Pipe	Steel - ANSI	1/2 inch
72	inches	1.464336			43, 66	Cylindrical Pipe	Steel - ANSI	1/2 inch
89	inches	1.1			34, 35	Cylindrical Pipe	Steel - ANSI	1/2 inch
91	inches	1.1			64, 38	Cylindrical Pipe	Steel - ANSI	1/2 inch

Pipe	Type	Special Condition
3	schedule 40	None
4	schedule 40	None
5		None
6		None
7	STD (schedule 40)	None
8	STD (schedule 40)	None
9		None
10		None
11	schedule 40	None
12	STD (schedule 40)	None
13	STD (schedule 40)	None
14	STD (schedule 40)	None

CALCULATION SHEET

Project No. 079701.18.01	Calculation No. 079701.18.01-M-001	Rev. 0	Page No. 23 of 115
Title: Tank Side Cesium Removal Process System Flow Analysis			
Prepared By: JF Gallegos	Date: 7/22/19	Checked By: KW Dixon	Date: 7/22/19

AFT Fathom 9 (Model) 7/18/2019 Page 6	AFT Fathom Model	

Pipe	Type	Special Condition
15	STD (schedule 40)	None
16	STD (schedule 40)	None
17	STD (schedule 40)	None
18	STD (schedule 40)	None
19	STD (schedule 40)	None
20	STD (schedule 40)	None
21	STD (schedule 40)	None
22	STD (schedule 40)	None
23	STD (schedule 40)	None
24	STD (schedule 40)	None
25	STD (schedule 40)	None
26	STD (schedule 40)	None
27	STD (schedule 40)	None
28	STD (schedule 40)	None
29	STD (schedule 40)	None
30	STD (schedule 40)	None
31	STD (schedule 40)	None
32	STD (schedule 40)	None
33	STD (schedule 40)	None
34	STD (schedule 40)	None
35	STD (schedule 40)	None
36	STD (schedule 40)	None
37	STD (schedule 40)	None
38	STD (schedule 40)	None
39	STD (schedule 40)	None
40	STD (schedule 40)	None
41	STD (schedule 40)	None
42	STD (schedule 40)	None
43	STD (schedule 40)	None
44	STD (schedule 40)	None
45	STD (schedule 40)	None
46	STD (schedule 40)	None
47	STD (schedule 40)	None
48	STD (schedule 40)	None
49	STD (schedule 40)	None
50	STD (schedule 40)	None
51	STD (schedule 40)	None
52	STD (schedule 40)	None
53	STD (schedule 40)	None
54		None

CALCULATION SHEET

Project No. 079701.18.01	Calculation No. 079701.18.01-M-001	Rev. 0	Page No. 24 of 115
Title: Tank Side Cesium Removal Process System Flow Analysis			
Prepared By: JF Gallegos	Date: 7/22/19	Checked By: KW Dixon	Date: 7/22/19

AFT Fathom 9 (Model) 7/18/2019 Page 7	AFT Fathom Model	

Pipe	Type	Special Condition
55	STD (schedule 40)	None
56	STD (schedule 40)	None
57	STD (schedule 40)	None
58	STD (schedule 40)	None
59	STD (schedule 40)	None
60	STD (schedule 40)	None
61	STD (schedule 40)	None
62	STD (schedule 40)	None
63	STD (schedule 40)	None
64	STD (schedule 40)	None
65	STD (schedule 40)	None
66	STD (schedule 40)	None
67	STD (schedule 40)	None
68	STD (schedule 40)	None
70	STD (schedule 40)	None
71	STD (schedule 40)	None
72	STD (schedule 40)	None
89	STD (schedule 40)	None
91	STD (schedule 40)	None

Pipe Fittings & Losses

Pipe	Total K	Area Change	Elbow/Bend Mitre	Elbow/Bend Smooth Flanged	Valve Ball	Valve Three-way	Other Tee
3	1.2		1 (0.9)	1 (0.3)			
4	2.23		1 (1.13)	2 (0.53)		1 (0.57)	
5	2.55		2 (2.28)	1 (0.27)			
6	3.5			11 (3.5)			
7	0.06				1 (0.06)		
8	0.35			1 (0.29)	1 (0.06)		
9	3.5			11 (3.5)			
10	2.55		2 (2.28)	1 (0.27)			
11	1.51		1 (1.13)	1 (0.38)			
12	0.18	1 (0.18)					
13	0.89			2 (0.73)	1 (0.08)		2 (0.08)
14	1.1						1 (1.1)
15	0.4			1 (0.36)			1 (0.04)
16	1.48			1 (0.32)	1 (0.06)		1 (1.1)
17	0.43			1 (0.32)	1 (0.07)		1 (0.04)
18	2.56			1 (0.36)			2 (2.2)
20	1.5			1 (0.36)			2 (1.14)

CALCULATION SHEET

Project No. 079701.18.01	Calculation No. 079701.18.01-M-001	Rev. 0	Page No. 25 of 115
Title: Tank Side Cesium Removal Process System Flow Analysis			
Prepared By: JF Gallegos	Date: 7/22/19	Checked By: KW Dixon	Date: 7/22/19

AFT Fathom 9 (Model)
7/18/2019
Page 8

AFT Fathom Model

Pipe	Total K	Area Change	Elbow/Bend Mitre	Elbow/Bend Smooth Flanged	Valve Ball	Valve Three-way	Other Tee
21	2.2						2 (2.2)
22	0.04						1 (0.04)
23	0.12				1 (0.08)		1 (0.04)
24	3.0	1 (2.32)		3 (0.68)			
25	0.96			3 (0.96)			
26	0.29	1 (0.13)			1 (0.08)		2 (0.08)
27	0.04						1 (0.04)
28	1.1						1 (1.1)
30	1.1						1 (1.1)
31	0.12				1 (0.08)		1 (0.04)
32	3.0	1 (2.32)		3 (0.68)			
33	0.96			3 (0.96)			
34	0.33	1 (0.13)			1 (0.08)		3 (0.12)
36	1.1						1 (1.1)
37	0.04						1 (0.04)
38	0.12				1 (0.08)		1 (0.04)
39	3.0	1 (2.32)		3 (0.68)			
40	0.96			3 (0.96)			
41	0.13	1 (0.13)					
43	0.12						3 (0.12)
44	1.1						1 (1.1)
45	0.44			1 (0.36)			2 (0.08)
46	1.1						1 (1.1)
47	0.77			2 (0.73)			1 (0.04)
48	1.09			3 (1.09)			
49	0.77			2 (0.73)			1 (0.04)
50	1.17			3 (1.09)			2 (0.08)
52	1.86			5 (1.82)			1 (0.04)
54	1.62			5 (1.62)			
55	0.4			1 (0.36)			1 (0.04)
56	1.1						1 (1.1)
57	1.48			1 (0.32)	1 (0.06)		1 (1.1)
58	0.43			1 (0.32)	1 (0.07)		1 (0.04)
59	2.56			1 (0.36)			2 (2.2)
61	2.92			5 (1.82)			1 (1.1)
62	1.46			1 (0.36)			1 (1.1)
63	0.08						2 (0.08)
64	0.04						1 (0.04)
65	1.14						2 (1.14)
66	2.56			4 (1.46)			1 (1.1)

CALCULATION SHEET

Project No. 079701.18.01	Calculation No. 079701.18.01-M-001	Rev. 0	Page No. 26 of 115
Title: Tank Side Cesium Removal Process System Flow Analysis			
Prepared By: JF Gallegos	Date: 7/22/19	Checked By: KW Dixon	Date: 7/22/19

AFT Fathom 9 (Model)
7/18/2019
Page 9

AFT Fathom Model

Pipe	Total K	Area Change	Elbow/Bend Mitre	Elbow/Bend Smooth Flanged	Valve Ball	Valve Three-way	Other Tee
67	0.04						1 (0.04)
68	0.04						1 (0.04)
70	0.04						1 (0.04)
71	0.04						1 (0.04)
72	1.46			1 (0.36)			1 (1.1)
89	1.1						1 (1.1)
91	1.1						1 (1.1)

Pipe Detail Summary

Pipe 3 Detailed Input Data
Name: Pump Piping
Geometry: Cylindrical Pipe
Material: Steel - ANSI 6 inch schedule 40
Inner Diameter= 6.065 inches
Length= 2.2 feet
Absolute Roughness= 0.0018 inches
Fittings & Losses= 1.1974
Elbow/Bend:
Mitre, General, 90 deg., K= 0.90, Quantity= 1
Smooth Flanged, r/D=1, 90 deg., K= 0.30, Quantity= 1

Pipe 4 Detailed Input Data
Name: Jumper AP07F-WT-J-[P1-P2-(A)]
Geometry: Cylindrical Pipe
Material: Steel - ANSI 2 inch schedule 40
Inner Diameter= 2.067 inches
Length= 5 feet
Absolute Roughness= 0.0018 inches
Fittings & Losses= 2.226188
Elbow/Bend:
Mitre, General, 90 deg., K= 1.13, Quantity= 1
Smooth Flanged, r/D=1.5, 90 deg., K= 0.26, Quantity= 2
Valve:
Three-way, Through flow, K= 0.57, Quantity= 1

Pipe 5 Detailed Input Data
Name: Jumper AP-07F-WT-EPDMJ-[A-B]
Geometry: Cylindrical Pipe
Material: Unspecified
Inner Diameter= 2 inches
Length= 45 inches
Absolute Roughness= 0.00126 inches
Fittings & Losses= 2.546
Elbow/Bend:
Mitre, General, 90 deg., K= 1.14, Quantity= 2
Smooth Flanged, r/D=1.5, 90 deg., K= 0.27, Quantity= 1

Pipe 6 Detailed Input Data
Name: Process Feed HIHTL (To TSCR)
Geometry: Cylindrical Pipe

CALCULATION SHEET

Project No. 079701.18.01	Calculation No. 079701.18.01-M-001	Rev. 0	Page No. 27 of 115
Title: Tank Side Cesium Removal Process System Flow Analysis			
Prepared By: JF Gallegos	Date: 7/22/19	Checked By: KW Dixon	Date: 7/22/19

AFT Fathom 9 (Model) 7/18/2019 Page 10	AFT Fathom Model	

Material: Unspecified
Inner Diameter= 2 inches
Length= 330 feet
Absolute Roughness= 0.00126 inches
Fittings & Losses= 3.496
Elbow/Bend:
Smooth Flanged, r/D=1.5, 90 deg., K= 0.27, Quantity= 1
Smooth Flanged, r/D=6, 90 deg., K= 0.32, Quantity= 10

Pipe 7 Detailed Input Data
Name:
Geometry: Cylindrical Pipe
Material: Steel - ANSI 1-1/2 inch STD (schedule 40)
Inner Diameter= 1.61 inches
Length= 3.5 feet
Absolute Roughness= 0.0018 inches
Fittings & Losses= 0.06168
Valve:
Ball, PO=100, K= 0.06, Quantity= 1

Pipe 8 Detailed Input Data
Name:
Geometry: Cylindrical Pipe
Material: Steel - ANSI 1-1/2 inch STD (schedule 40)
Inner Diameter= 1.61 inches
Length= 5.5 feet
Absolute Roughness= 0.0018 inches
Fittings & Losses= 0.34952
Elbow/Bend:
Smooth Flanged, r/D=1.5, 90 deg., K= 0.29, Quantity= 1
Valve:
Ball, PO=100, K= 0.06, Quantity= 1

Pipe 9 Detailed Input Data
Name: Feed Recirc HIHTL (From TSCR)
Geometry: Cylindrical Pipe
Material: Unspecified
Inner Diameter= 2 inches
Length= 335 feet
Absolute Roughness= 0.00126 inches
Fittings & Losses= 3.496
Elbow/Bend:
Smooth Flanged, r/D=1.5, 90 deg., K= 0.27, Quantity= 1
Smooth Flanged, r/D=6, 90 deg., K= 0.32, Quantity= 10

Pipe 10 Detailed Input Data
Name: Jumper AP07F-WT-EPDMJ-[C-D]
Geometry: Cylindrical Pipe
Material: Unspecified
Inner Diameter= 2 inches
Length= 55 inches
Absolute Roughness= 0.00126 inches
Fittings & Losses= 2.546
Elbow/Bend:
Mitre, General, 90 deg., K= 1.14, Quantity= 2
Smooth Flanged, r/D=1.5, 90 deg., K= 0.27, Quantity= 1

CALCULATION SHEET

Project No. 079701.18.01	Calculation No. 079701.18.01-M-001	Rev. 0	Page No. 28 of 115
Title: Tank Side Cesium Removal Process System Flow Analysis			
Prepared By: JF Gallegos	Date: 7/22/19	Checked By: KW Dixon	Date: 7/22/19

AFT Fathom 9 (Model) 7/18/2019 Page 11	AFT Fathom Model	

Pipe 11 Detailed Input Data
- Name: Recirc Dropleg (H-14-111336)
- Geometry: Cylindrical Pipe
- Material: Steel - ANSI 2 inch schedule 40
- Inner Diameter= 2.067 inches
- Length= 1 feet
- Absolute Roughness= 0.0018 inches
- Fittings & Losses= 1.50928
- Elbow/Bend:
  - Mitre, General, 90 deg., K= 1.13, Quantity= 1
  - Smooth Flanged, r/D=1, 90 deg., K= 0.38, Quantity= 1

Pipe 12 Detailed Input Data
- Name:
- Geometry: Cylindrical Pipe
- Material: Steel - ANSI 1/2 inch STD (schedule 40)
- Inner Diameter= 0.622 inches
- Length= 0.5 feet
- Absolute Roughness= 0.0018 inches
- Fittings & Losses= 0.1763804
- Area Change:
  - Contraction to Pipe Area, K= 0.18, Quantity= 1

Pipe 13 Detailed Input Data
- Name: Pipe
- Geometry: Cylindrical Pipe
- Material: Steel - ANSI 1/2 inch STD (schedule 40)
- Inner Diameter= 0.622 inches
- Length= 3.5 feet
- Absolute Roughness= 0.0018 inches
- Fittings & Losses= 0.886744
- Elbow/Bend:
  - Smooth Flanged, r/D=1.5, 90 deg., K= 0.36, Quantity= 2
- Valve:
  - Ball, PO=100, K= 0.08, Quantity= 1
- Other:
  - Tee, Through flow (dead branch), K= 0.04, Quantity= 2

Pipe 14 Detailed Input Data
- Name: Pipe
- Geometry: Cylindrical Pipe
- Material: Steel - ANSI 1/2 inch STD (schedule 40)
- Inner Diameter= 0.622 inches
- Length= 0.5 feet
- Absolute Roughness= 0.0018 inches
- Fittings & Losses= 1.1
- Other:
  - Tee, Branch flow (dead run), K= 1.10, Quantity= 1

Pipe 15 Detailed Input Data
- Name: Pipe
- Geometry: Cylindrical Pipe
- Material: Steel - ANSI 1/2 inch STD (schedule 40)
- Inner Diameter= 0.622 inches
- Length= 2 feet
- Absolute Roughness= 0.0018 inches
- Fittings & Losses= 0.404336

CALCULATION SHEET

Project No. 079701.18.01	Calculation No. 079701.18.01-M-001	Rev. 0	Page No. 29 of 115
Title: Tank Side Cesium Removal Process System Flow Analysis			
Prepared By: JF Gallegos	Date: 7/22/19	Checked By: KW Dixon	Date: 7/22/19

AFT Fathom 9 (Model) 7/18/2019 Page 12	AFT Fathom Model	

Elbow/Bend:
Smooth Flanged, r/D=1.5, 90 deg., K= 0.36, Quantity= 1
Other:
Tee, Through flow (dead branch), K= 0.04, Quantity= 1

Pipe 16 Detailed Input Data
Name: Pipe
Geometry: Cylindrical Pipe
Material: Steel - ANSI 2 inch STD (schedule 40)
Inner Diameter= 2.067 inches
Length= 3 feet
Absolute Roughness= 0.0018 inches
Fittings & Losses= 1.47732
Elbow/Bend:
Smooth Flanged, r/D=6, 90 deg., K= 0.32, Quantity= 1
Valve:
Ball, PO=100, K= 0.06, Quantity= 1
Other:
Tee, Branch flow (dead run), K= 1.10, Quantity= 1

Pipe 17 Detailed Input Data
Name: Pipe
Geometry: Cylindrical Pipe
Material: Steel - ANSI 1 inch STD (schedule 40)
Inner Diameter= 1.049 inches
Length= 3 feet
Absolute Roughness= 0.0018 inches
Fittings & Losses= 0.427668
Elbow/Bend:
Smooth Flanged, r/D=1.5, 90 deg., K= 0.32, Quantity= 1
Valve:
Ball, PO=100, K= 0.07, Quantity= 1
Other:
Tee, Through flow (dead branch), K= 0.04, Quantity= 1

Pipe 18 Detailed Input Data
Name: Pipe
Geometry: Cylindrical Pipe
Material: Steel - ANSI 1/2 inch STD (schedule 40)
Inner Diameter= 0.622 inches
Length= 2.5 feet
Absolute Roughness= 0.0018 inches
Fittings & Losses= 2.564336
Elbow/Bend:
Smooth Flanged, r/D=1.5, 90 deg., K= 0.36, Quantity= 1
Other:
Tee, Branch flow (dead run), K= 1.10, Quantity= 2

Pipe 19 Detailed Input Data
Name: Pipe
Geometry: Cylindrical Pipe
Material: Steel - ANSI 1/2 inch STD (schedule 40)
Inner Diameter= 0.622 inches
Length= 0.5 feet
Absolute Roughness= 0.0018 inches
Fittings & Losses= 0

CALCULATION SHEET

Project No. 079701.18.01	Calculation No. 079701.18.01-M-001	Rev. 0	Page No. 30 of 115
Title: Tank Side Cesium Removal Process System Flow Analysis			
Prepared By: JF Gallegos	Date: 7/22/19	Checked By: KW Dixon	Date: 7/22/19

AFT Fathom 9 (Model) 7/18/2019 Page 13	AFT Fathom Model	

Pipe 20 Detailed Input Data
Name: Pipe
Geometry: Cylindrical Pipe
Material: Steel - ANSI 1/2 inch STD (schedule 40)
Inner Diameter= 0.622 inches
Length= 7 feet
Absolute Roughness= 0.0018 inches
Fittings & Losses= 1.504336
Elbow/Bend:
Smooth Flanged, r/D=1.5, 90 deg., K= 0.36, Quantity= 1
Other:
Tee, Through flow (dead branch), K= 0.04, Quantity= 1
Tee, Branch flow (dead run), K= 1.10, Quantity= 1

Pipe 21 Detailed Input Data
Name: Pipe
Geometry: Cylindrical Pipe
Material: Steel - ANSI 1/2 inch STD (schedule 40)
Inner Diameter= 0.622 inches
Length= 0.5 feet
Absolute Roughness= 0.0018 inches
Fittings & Losses= 2.2
Other:
Tee, Branch flow (dead run), K= 1.10, Quantity= 2

Pipe 22 Detailed Input Data
Name: Pipe
Geometry: Cylindrical Pipe
Material: Steel - ANSI 1/2 inch STD (schedule 40)
Inner Diameter= 0.622 inches
Length= 1 feet
Absolute Roughness= 0.0018 inches
Fittings & Losses= 0.04
Other:
Tee, Through flow (dead branch), K= 0.04, Quantity= 1

Pipe 23 Detailed Input Data
Name: Pipe
Geometry: Cylindrical Pipe
Material: Steel - ANSI 1/2 inch STD (schedule 40)
Inner Diameter= 0.622 inches
Length= 1 feet
Absolute Roughness= 0.0018 inches
Fittings & Losses= 0.118072
Valve:
Ball, PO=100, K= 0.08, Quantity= 1
Other:
Tee, Through flow (dead branch), K= 0.04, Quantity= 1

Pipe 24 Detailed Input Data
Name: Inlet Hose
Geometry: Cylindrical Pipe
Material: Steel - ANSI 1 inch STD (schedule 40)
Inner Diameter= 1.049 inches
Length= 1.5 feet
Absolute Roughness= 0.0018 inches
Fittings & Losses= 2.998949

CALCULATION SHEET

Project No. 079701.18.01	Calculation No. 079701.18.01-M-001	Rev. 0	Page No. 31 of 115
Title: Tank Side Cesium Removal Process System Flow Analysis			
Prepared By: JF Gallegos	Date: 7/22/19	Checked By: KW Dixon	Date: 7/22/19

AFT Fathom 9 (Model) 7/18/2019 Page 14	AFT Fathom Model	

Elbow/Bend:
Smooth Flanged, r/D=1.5, 45 deg., K= 0.23, Quantity= 3
Area Change:
Expansion to Pipe Area, K= 2.32, Quantity= 1

Pipe 25 Detailed Input Data
Name: Outlet Hose
Geometry: Cylindrical Pipe
Material: Steel - ANSI 1 inch STD (schedule 40)
Inner Diameter= 1.049 inches
Length= 2 feet
Absolute Roughness= 0.0018 inches
Fittings & Losses= 0.957768
Elbow/Bend:
Smooth Flanged, r/D=1.5, 90 deg., K= 0.32, Quantity= 3

Pipe 26 Detailed Input Data
Name: Pipe
Geometry: Cylindrical Pipe
Material: Steel - ANSI 1/2 inch STD (schedule 40)
Inner Diameter= 0.622 inches
Length= 2.5 feet
Absolute Roughness= 0.0018 inches
Fittings & Losses= 0.2911789
Valve:
Ball, PO=100, K= 0.08, Quantity= 1
Other:
Tee, Through flow (dead branch), K= 0.04, Quantity= 2
Area Change:
Contraction to Pipe Area, K= 0.13, Quantity= 1

Pipe 27 Detailed Input Data
Name: Pipe
Geometry: Cylindrical Pipe
Material: Steel - ANSI 1/2 inch STD (schedule 40)
Inner Diameter= 0.622 inches
Length= 0.5 feet
Absolute Roughness= 0.0018 inches
Fittings & Losses= 0.04
Other:
Tee, Through flow (dead branch), K= 0.04, Quantity= 1

Pipe 28 Detailed Input Data
Name: Pipe
Geometry: Cylindrical Pipe
Material: Steel - ANSI 1/2 inch STD (schedule 40)
Inner Diameter= 0.622 inches
Length= 0.5 feet
Absolute Roughness= 0.0018 inches
Fittings & Losses= 1.1
Other:
Tee, Branch flow (dead run), K= 1.10, Quantity= 1

Pipe 29 Detailed Input Data
Name: Pipe
Geometry: Cylindrical Pipe
Material: Steel - ANSI 1/2 inch STD (schedule 40)

CALCULATION SHEET

Project No. 079701.18.01	Calculation No. 079701.18.01-M-001	Rev. 0	Page No. 32 of 115
Title: Tank Side Cesium Removal Process System Flow Analysis			
Prepared By: JF Gallegos	Date: 7/22/19	Checked By: KW Dixon	Date: 7/22/19

AFT Fathom 9 (Model) 7/18/2019 Page 15	AFT Fathom Model	

Inner Diameter= 0.622 inches
Length= 2 feet
Absolute Roughness= 0.0018 inches
Fittings & Losses= 0

Pipe 30 Detailed Input Data
Name: Pipe
Geometry: Cylindrical Pipe
Material: Steel - ANSI 1/2 inch STD (schedule 40)
Inner Diameter= 0.622 inches
Length= 0.5 feet
Absolute Roughness= 0.0018 inches
Fittings & Losses= 1.1
Other:
Tee, Branch flow (dead run), K= 1.10, Quantity= 1

Pipe 31 Detailed Input Data
Name: Pipe
Geometry: Cylindrical Pipe
Material: Steel - ANSI 1/2 inch STD (schedule 40)
Inner Diameter= 0.622 inches
Length= 2 feet
Absolute Roughness= 0.0018 inches
Fittings & Losses= 0.118072
Valve:
Ball, PO=100, K= 0.08, Quantity= 1
Other:
Tee, Through flow (dead branch), K= 0.04, Quantity= 1

Pipe 32 Detailed Input Data
Name: Inlet Hose
Geometry: Cylindrical Pipe
Material: Steel - ANSI 1 inch STD (schedule 40)
Inner Diameter= 1.049 inches
Length= 1.5 feet
Absolute Roughness= 0.0018 inches
Fittings & Losses= 2.998949
Elbow/Bend:
Smooth Flanged, r/D=1.5, 45 deg., K= 0.23, Quantity= 3
Area Change:
Expansion to Pipe Area, K= 2.32, Quantity= 1

Pipe 33 Detailed Input Data
Name: Outlet Hose
Geometry: Cylindrical Pipe
Material: Steel - ANSI 1 inch STD (schedule 40)
Inner Diameter= 1.049 inches
Length= 2 feet
Absolute Roughness= 0.0018 inches
Fittings & Losses= 0.957768
Elbow/Bend:
Smooth Flanged, r/D=1.5, 90 deg., K= 0.32, Quantity= 3

Pipe 34 Detailed Input Data
Name: Pipe
Geometry: Cylindrical Pipe
Material: Steel - ANSI 1/2 inch STD (schedule 40)

CALCULATION SHEET

Project No. 079701.18.01	Calculation No. 079701.18.01-M-001	Rev. 0	Page No. 33 of 115
Title: Tank Side Cesium Removal Process System Flow Analysis			
Prepared By: JF Gallegos	Date: 7/22/19	Checked By: KW Dixon	Date: 7/22/19

AFT Fathom 9 (Model) 7/18/2019 Page 16	AFT Fathom Model	

Inner Diameter= 0.622 inches
Length= 3 feet
Absolute Roughness= 0.0018 inches
Fittings & Losses= 0.3311789
Valve:
Ball, PO=100, K= 0.08, Quantity= 1
Other:
Tee, Through flow (dead branch), K= 0.04, Quantity= 3
Area Change:
Contraction to Pipe Area, K= 0.13, Quantity= 1

Pipe 35 Detailed Input Data
Name: Pipe
Geometry: Cylindrical Pipe
Material: Steel - ANSI 1/2 inch STD (schedule 40)
Inner Diameter= 0.622 inches
Length= 2 feet
Absolute Roughness= 0.0018 inches
Fittings & Losses= 0

Pipe 36 Detailed Input Data
Name: Pipe
Geometry: Cylindrical Pipe
Material: Steel - ANSI 1/2 inch STD (schedule 40)
Inner Diameter= 0.622 inches
Length= 0.5 feet
Absolute Roughness= 0.0018 inches
Fittings & Losses= 1.1
Other:
Tee, Branch flow (dead run), K= 1.10, Quantity= 1

Pipe 37 Detailed Input Data
Name: Pipe
Geometry: Cylindrical Pipe
Material: Steel - ANSI 1/2 inch STD (schedule 40)
Inner Diameter= 0.622 inches
Length= 0.5 feet
Absolute Roughness= 0.0018 inches
Fittings & Losses= 0.04
Other:
Tee, Through flow (dead branch), K= 0.04, Quantity= 1

Pipe 38 Detailed Input Data
Name: Pipe
Geometry: Cylindrical Pipe
Material: Steel - ANSI 1/2 inch STD (schedule 40)
Inner Diameter= 0.622 inches
Length= 1.5 feet
Absolute Roughness= 0.0018 inches
Fittings & Losses= 0.118072
Valve:
Ball, PO=100, K= 0.08, Quantity= 1
Other:
Tee, Through flow (dead branch), K= 0.04, Quantity= 1

Pipe 39 Detailed Input Data
Name: Inlet Hose

CALCULATION SHEET

Project No. 079701.18.01	Calculation No. 079701.18.01-M-001	Rev. 0	Page No. 34 of 115
Title: Tank Side Cesium Removal Process System Flow Analysis			
Prepared By: JF Gallegos	Date: 7/22/19	Checked By: KW Dixon	Date: 7/22/19

AFT Fathom 9 (Model) 7/18/2019 Page 17	AFT Fathom Model	

Geometry: Cylindrical Pipe
Material: Steel - ANSI 1 inch STD (schedule 40)
Inner Diameter= 1.049 inches
Length= 1.5 feet
Absolute Roughness= 0.0018 inches
Fittings & Losses= 2.998949
Elbow/Bend:
Smooth Flanged, r/D=1.5, 45 deg., K= 0.23, Quantity= 3
Area Change:
Expansion to Pipe Area, K= 2.32, Quantity= 1

Pipe 40 Detailed Input Data
Name: Outlet Hose
Geometry: Cylindrical Pipe
Material: Steel - ANSI 1 inch STD (schedule 40)
Inner Diameter= 1.049 inches
Length= 2 feet
Absolute Roughness= 0.0018 inches
Fittings & Losses= 0.957768
Elbow/Bend:
Smooth Flanged, r/D=1.5, 90 deg., K= 0.32, Quantity= 3

Pipe 41 Detailed Input Data
Name: Pipe
Geometry: Cylindrical Pipe
Material: Steel - ANSI 1/2 inch STD (schedule 40)
Inner Diameter= 0.622 inches
Length= 1.5 feet
Absolute Roughness= 0.0018 inches
Fittings & Losses= 0.1331069
Area Change:
Contraction to Pipe Area, K= 0.13, Quantity= 1

Pipe 42 Detailed Input Data
Name: Pipe
Geometry: Cylindrical Pipe
Material: Steel - ANSI 1/2 inch STD (schedule 40)
Inner Diameter= 0.622 inches
Length= 0.5 feet
Absolute Roughness= 0.0018 inches
Fittings & Losses= 0

Pipe 43 Detailed Input Data
Name: Pipe
Geometry: Cylindrical Pipe
Material: Steel - ANSI 1/2 inch STD (schedule 40)
Inner Diameter= 0.622 inches
Length= 1 feet
Absolute Roughness= 0.0018 inches
Fittings & Losses= 0.12
Other:
Tee, Through flow (dead branch), K= 0.04, Quantity= 3

Pipe 44 Detailed Input Data
Name: Pipe
Geometry: Cylindrical Pipe
Material: Steel - ANSI 1/2 inch STD (schedule 40)

CALCULATION SHEET

Project No. 079701.18.01	Calculation No. 079701.18.01-M-001	Rev. 0	Page No. 35 of 115
Title: Tank Side Cesium Removal Process System Flow Analysis			
Prepared By: JF Gallegos	Date: 7/22/19	Checked By: KW Dixon	Date: 7/22/19

AFT Fathom 9 (Model) 7/18/2019 Page 18	AFT Fathom Model	

Inner Diameter= 0.622 inches
Length= 0.5 feet
Absolute Roughness= 0.0018 inches
Fittings & Losses= 1.1
Other:
Tee, Branch flow (dead run), K= 1.10, Quantity= 1

Pipe 45 Detailed Input Data
Name: Pipe
Geometry: Cylindrical Pipe
Material: Steel - ANSI 1/2 inch STD (schedule 40)
Inner Diameter= 0.622 inches
Length= 4 feet
Absolute Roughness= 0.0018 inches
Fittings & Losses= 0.444336
Elbow/Bend:
Smooth Flanged, r/D=1.5, 90 deg., K= 0.36, Quantity= 1
Other:
Tee, Through flow (dead branch), K= 0.04, Quantity= 2

Pipe 46 Detailed Input Data
Name: Pipe
Geometry: Cylindrical Pipe
Material: Steel - ANSI 1/2 inch STD (schedule 40)
Inner Diameter= 0.622 inches
Length= 1 feet
Absolute Roughness= 0.0018 inches
Fittings & Losses= 1.1
Other:
Tee, Branch flow (dead run), K= 1.10, Quantity= 1

Pipe 47 Detailed Input Data
Name: Pipe
Geometry: Cylindrical Pipe
Material: Steel - ANSI 1/2 inch STD (schedule 40)
Inner Diameter= 0.622 inches
Length= 4 feet
Absolute Roughness= 0.0018 inches
Fittings & Losses= 0.768672
Elbow/Bend:
Smooth Flanged, r/D=1.5, 90 deg., K= 0.36, Quantity= 2
Other:
Tee, Through flow (dead branch), K= 0.04, Quantity= 1

Pipe 48 Detailed Input Data
Name: Pipe
Geometry: Cylindrical Pipe
Material: Steel - ANSI 1/2 inch STD (schedule 40)
Inner Diameter= 0.622 inches
Length= 8 feet
Absolute Roughness= 0.0018 inches
Fittings & Losses= 1.093008
Elbow/Bend:
Smooth Flanged, r/D=1.5, 90 deg., K= 0.36, Quantity= 3

Pipe 49 Detailed Input Data
Name: Pipe

CALCULATION SHEET

Project No. 079701.18.01	Calculation No. 079701.18.01-M-001	Rev. 0	Page No. 36 of 115
Title: Tank Side Cesium Removal Process System Flow Analysis			
Prepared By: JF Gallegos	Date: 7/22/19	Checked By: KW Dixon	Date: 7/22/19

AFT Fathom 9 (Model) 7/18/2019 Page 19	AFT Fathom Model	

Geometry: Cylindrical Pipe
Material: Steel - ANSI 1/2 inch STD (schedule 40)
Inner Diameter= 0.622 inches
Length= 5 feet
Absolute Roughness= 0.0018 inches
Fittings & Losses= 0.768672
Elbow/Bend:
Smooth Flanged, r/D=1.5, 90 deg., K= 0.36, Quantity= 2
Other:
Tee, Through flow (dead branch), K= 0.04, Quantity= 1

Pipe 50 Detailed Input Data
Name: Pipe
Geometry: Cylindrical Pipe
Material: Steel - ANSI 1/2 inch STD (schedule 40)
Inner Diameter= 0.622 inches
Length= 6 feet
Absolute Roughness= 0.0018 inches
Fittings & Losses= 1.173008
Elbow/Bend:
Smooth Flanged, r/D=1.5, 90 deg., K= 0.36, Quantity= 3
Other:
Tee, Through flow (dead branch), K= 0.04, Quantity= 2

Pipe 51 Detailed Input Data
Name: Pipe
Geometry: Cylindrical Pipe
Material: Steel - ANSI 1/2 inch STD (schedule 40)
Inner Diameter= 0.622 inches
Length= 1 feet
Absolute Roughness= 0.0018 inches
Fittings & Losses= 0

Pipe 52 Detailed Input Data
Name: Pipe
Geometry: Cylindrical Pipe
Material: Steel - ANSI 1/2 inch STD (schedule 40)
Inner Diameter= 0.622 inches
Length= 32 feet
Absolute Roughness= 0.0018 inches
Fittings & Losses= 1.86168
Elbow/Bend:
Smooth Flanged, r/D=1.5, 90 deg., K= 0.36, Quantity= 5
Other:
Tee, Through flow (dead branch), K= 0.04, Quantity= 1

Pipe 53 Detailed Input Data
Name: Pipe
Geometry: Cylindrical Pipe
Material: Steel - ANSI 1/2 inch STD (schedule 40)
Inner Diameter= 0.622 inches
Length= 2 feet
Absolute Roughness= 0.0018 inches
Fittings & Losses= 0

Pipe 54 Detailed Input Data
Name: Treated Effluent HIHTL (From TSCR)

CALCULATION SHEET

Project No. 079701.18.01	Calculation No. 079701.18.01-M-001	Rev. 0	Page No. 37 of 115
Title: Tank Side Cesium Removal Process System Flow Analysis			
Prepared By: JF Gallegos	Date: 7/22/19	Checked By: KW Dixon	Date: 7/22/19

AFT Fathom 9 (Model) 7/18/2019 Page 20	AFT Fathom Model	

Geometry: Cylindrical Pipe
Material: Unspecified
Inner Diameter= 2 inches
Length= 211 feet
Absolute Roughness= 0.00126 inches
Fittings & Losses= 1.615
Elbow/Bend:
Smooth Flanged, r/D=6, 90 deg., K= 0.32, Quantity= 5

Pipe 55 Detailed Input Data
Name: Pipe
Geometry: Cylindrical Pipe
Material: Steel - ANSI 1/2 inch STD (schedule 40)
Inner Diameter= 0.622 inches
Length= 1 feet
Absolute Roughness= 0.0018 inches
Fittings & Losses= 0.404336
Elbow/Bend:
Smooth Flanged, r/D=1.5, 90 deg., K= 0.36, Quantity= 1
Other:
Tee, Through flow (dead branch), K= 0.04, Quantity= 1

Pipe 56 Detailed Input Data
Name: Pipe
Geometry: Cylindrical Pipe
Material: Steel - ANSI 1/2 inch STD (schedule 40)
Inner Diameter= 0.622 inches
Length= 1.5 feet
Absolute Roughness= 0.0018 inches
Fittings & Losses= 1.1
Other:
Tee, Branch flow (dead run), K= 1.10, Quantity= 1

Pipe 57 Detailed Input Data
Name: Pipe
Geometry: Cylindrical Pipe
Material: Steel - ANSI 2 inch STD (schedule 40)
Inner Diameter= 2.067 inches
Length= 3 feet
Absolute Roughness= 0.0018 inches
Fittings & Losses= 1.47732
Elbow/Bend:
Smooth Flanged, r/D=6, 90 deg., K= 0.32, Quantity= 1
Valve:
Ball, PO=100, K= 0.06, Quantity= 1
Other:
Tee, Branch flow (dead run), K= 1.10, Quantity= 1

Pipe 58 Detailed Input Data
Name: Pipe
Geometry: Cylindrical Pipe
Material: Steel - ANSI 1 inch STD (schedule 40)
Inner Diameter= 1.049 inches
Length= 3 feet
Absolute Roughness= 0.0018 inches
Fittings & Losses= 0.427668
Elbow/Bend:

CALCULATION SHEET

Project No. 079701.18.01	Calculation No. 079701.18.01-M-001	Rev. 0	Page No. 38 of 115
Title: Tank Side Cesium Removal Process System Flow Analysis			
Prepared By: JF Gallegos	Date: 7/22/19	Checked By: KW Dixon	Date: 7/22/19

AFT Fathom 9 (Model) 7/18/2019 Page 21	AFT Fathom Model	

Smooth Flanged, r/D=1.5, 90 deg., K= 0.32, Quantity= 1
Valve:
Ball, PO=100, K= 0.07, Quantity= 1
Other:
Tee, Through flow (dead branch), K= 0.04, Quantity= 1

Pipe 59 Detailed Input Data
Name: Pipe
Geometry: Cylindrical Pipe
Material: Steel - ANSI 1/2 inch STD (schedule 40)
Inner Diameter= 0.622 inches
Length= 2.5 feet
Absolute Roughness= 0.0018 inches
Fittings & Losses= 2.564336
Elbow/Bend:
Smooth Flanged, r/D=1.5, 90 deg., K= 0.36, Quantity= 1
Other:
Tee, Branch flow (dead run), K= 1.10, Quantity= 2

Pipe 60 Detailed Input Data
Name: Pipe
Geometry: Cylindrical Pipe
Material: Steel - ANSI 1/2 inch STD (schedule 40)
Inner Diameter= 0.622 inches
Length= 0.5 feet
Absolute Roughness= 0.0018 inches
Fittings & Losses= 0

Pipe 61 Detailed Input Data
Name: Pipe
Geometry: Cylindrical Pipe
Material: Steel - ANSI 1/2 inch STD (schedule 40)
Inner Diameter= 0.622 inches
Length= 12 feet
Absolute Roughness= 0.0018 inches
Fittings & Losses= 2.92168
Elbow/Bend:
Smooth Flanged, r/D=1.5, 90 deg., K= 0.36, Quantity= 5
Other:
Tee, Branch flow (dead run), K= 1.10, Quantity= 1

Pipe 62 Detailed Input Data
Name: Pipe
Geometry: Cylindrical Pipe
Material: Steel - ANSI 1/2 inch STD (schedule 40)
Inner Diameter= 0.622 inches
Length= 11.5 feet
Absolute Roughness= 0.0018 inches
Fittings & Losses= 1.464336
Elbow/Bend:
Smooth Flanged, r/D=1.5, 90 deg., K= 0.36, Quantity= 1
Other:
Tee, Branch flow (dead run), K= 1.10, Quantity= 1

Pipe 63 Detailed Input Data
Name: Pipe
Geometry: Cylindrical Pipe

CALCULATION SHEET

Project No. 079701.18.01	Calculation No. 079701.18.01-M-001	Rev. 0	Page No. 39 of 115
Title: Tank Side Cesium Removal Process System Flow Analysis			
Prepared By: JF Gallegos	Date: 7/22/19	Checked By: KW Dixon	Date: 7/22/19

AFT Fathom 9 (Model) 7/18/2019 Page 22	AFT Fathom Model	

Material: Steel - ANSI 1/2 inch STD (schedule 40)
Inner Diameter= 0.622 inches
Length= 0.5 feet
Absolute Roughness= 0.0018 inches
Fittings & Losses= 0.08
Other:
Tee, Through flow (dead branch), K= 0.04, Quantity= 2

Pipe 64 Detailed Input Data
Name: Pipe
Geometry: Cylindrical Pipe
Material: Steel - ANSI 1/2 inch STD (schedule 40)
Inner Diameter= 0.622 inches
Length= 2 feet
Absolute Roughness= 0.0018 inches
Fittings & Losses= 0.04
Other:
Tee, Through flow (dead branch), K= 0.04, Quantity= 1

Pipe 65 Detailed Input Data
Name: Pipe
Geometry: Cylindrical Pipe
Material: Steel - ANSI 1/2 inch STD (schedule 40)
Inner Diameter= 0.622 inches
Length= 1 feet
Absolute Roughness= 0.0018 inches
Fittings & Losses= 1.14
Other:
Tee, Through flow (dead branch), K= 0.04, Quantity= 1
Tee, Branch flow (dead run), K= 1.10, Quantity= 1

Pipe 66 Detailed Input Data
Name: Pipe
Geometry: Cylindrical Pipe
Material: Steel - ANSI 1/2 inch STD (schedule 40)
Inner Diameter= 0.622 inches
Length= 9.5 feet
Absolute Roughness= 0.0018 inches
Fittings & Losses= 2.557344
Elbow/Bend:
Smooth Flanged, r/D=1.5, 90 deg., K= 0.36, Quantity= 4
Other:
Tee, Branch flow (dead run), K= 1.10, Quantity= 1

Pipe 67 Detailed Input Data
Name: Pipe
Geometry: Cylindrical Pipe
Material: Steel - ANSI 1/2 inch STD (schedule 40)
Inner Diameter= 0.622 inches
Length= 0.5 feet
Absolute Roughness= 0.0018 inches
Fittings & Losses= 0.04
Other:
Tee, Through flow (dead branch), K= 0.04, Quantity= 1

Pipe 68 Detailed Input Data
Name: Pipe

CALCULATION SHEET

Project No. 079701.18.01	Calculation No. 079701.18.01-M-001	Rev. 0	Page No. 40 of 115
Title: Tank Side Cesium Removal Process System Flow Analysis			
Prepared By: JF Gallegos	Date: 7/22/19	Checked By: KW Dixon	Date: 7/22/19

AFT Fathom 9 (Model) 7/18/2019 Page 23	AFT Fathom Model	

Geometry: Cylindrical Pipe
Material: Steel - ANSI 1/2 inch STD (schedule 40)
Inner Diameter= 0.622 inches
Length= 2.5 feet
Absolute Roughness= 0.0018 inches
Fittings & Losses= 0.04
Other:
Tee, Through flow (dead branch), K= 0.04, Quantity= 1

Pipe 70 Detailed Input Data
Name: Pipe
Geometry: Cylindrical Pipe
Material: Steel - ANSI 1/2 inch STD (schedule 40)
Inner Diameter= 0.622 inches
Length= 2 feet
Absolute Roughness= 0.0018 inches
Fittings & Losses= 0.04
Other:
Tee, Through flow (dead branch), K= 0.04, Quantity= 1

Pipe 71 Detailed Input Data
Name: Pipe
Geometry: Cylindrical Pipe
Material: Steel - ANSI 1/2 inch STD (schedule 40)
Inner Diameter= 0.622 inches
Length= 0.5 feet
Absolute Roughness= 0.0018 inches
Fittings & Losses= 0.04
Other:
Tee, Through flow (dead branch), K= 0.04, Quantity= 1

Pipe 72 Detailed Input Data
Name: Pipe
Geometry: Cylindrical Pipe
Material: Steel - ANSI 1/2 inch STD (schedule 40)
Inner Diameter= 0.622 inches
Length= 0.5 feet
Absolute Roughness= 0.0018 inches
Fittings & Losses= 1.464336
Elbow/Bend:
Smooth Flanged, r/D=1.5, 90 deg., K= 0.36, Quantity= 1
Other:
Tee, Branch flow (dead run), K= 1.10, Quantity= 1

Pipe 89 Detailed Input Data
Name: Pipe
Geometry: Cylindrical Pipe
Material: Steel - ANSI 1/2 inch STD (schedule 40)
Inner Diameter= 0.622 inches
Length= 0.5 feet
Absolute Roughness= 0.0018 inches
Fittings & Losses= 1.1
Other:
Tee, Branch flow (dead run), K= 1.10, Quantity= 1

Pipe 91 Detailed Input Data
Name: Pipe

CALCULATION SHEET

Project No. 079701.18.01	Calculation No. 079701.18.01-M-001	Rev. 0	Page No. 41 of 115
Title: Tank Side Cesium Removal Process System Flow Analysis			
Prepared By: JF Gallegos	Date: 7/22/19	Checked By: KW Dixon	Date: 7/22/19

AFT Fathom 9 (Model) 7/18/2019 Page 24	AFT Fathom Model	

Geometry: Cylindrical Pipe
Material: Steel - ANSI 1/2 inch STD (schedule 40)
Inner Diameter= 0.622 inches
Length= 0.5 feet
Absolute Roughness= 0.0018 inches
Fittings & Losses= 1.1
Other:
Tee, Branch flow (dead run), K= 1.10, Quantity= 1

Area Change Table

Area Change	Name	Object Defined	Inlet Elevation	Elevation Units	Initial Pressure	Initial Pressure Units	Database Source	Type	Geometry
7		Yes	681	feet	951.7	feet		Conical	Contraction
9	Area Change	Yes	681	feet	899.0	feet		Conical	Expansion
54	Area Change	Yes	681	feet				Conical	Expansion

Area Change	Angle	Loss Factor
7	30.	0.173546
9	30.	0.08336683
54	45.	0.8118146

Assigned Pressure Table

Assigned Pressure	Name	Object Defined	Inlet Elevation	Elevation Units	Initial Pressure	Initial Pressure Units	Database Source	Pressure
12	AP-07F	Yes	677	feet	1.000	atm		1
55	AP-106 Riser 2	Yes	680	feet	1.000	atm		1

Assigned Pressure	Pressure Units	Pressure Type	Balance Energy	Balance Concentration	(Pipe #1) K In, K Out	(Pipe #2) K In, K Out	(Pipe #3) K In, K Out	(Pipe #4) K In, K Out
12	atm	Stagnation	No	No	(P11) 0, 1			
55	atm	Stagnation	No	No	(P54) 0, 1			

Assigned Pressure	(Pipe #5) K In, K Out	(Pipe #6) K In, K Out	(Pipe #7) K In, K Out	(Pipe #8) K In, K Out	(Pipe #9) K In, K Out	(Pipe #10) K In, K Out	(Pipe #11) K In, K Out	(Pipe #12) K In, K Out
12								
55								

Assigned Pressure	(Pipe #13) K In, K Out	(Pipe #14) K In, K Out	(Pipe #15) K In, K Out	(Pipe #16) K In, K Out	(Pipe #17) K In, K Out	(Pipe #18) K In, K Out	(Pipe #19) K In, K Out	(Pipe #20) K In, K Out
12								
55								

Assigned Pressure	(Pipe #21) K In, K Out	(Pipe #22) K In, K Out	(Pipe #23) K In, K Out	(Pipe #24) K In, K Out	(Pipe #25) K In, K Out
12					
55					

CALCULATION SHEET

Project No. 079701.18.01	Calculation No. 079701.18.01-M-001	Rev. 0	Page No. 42 of 115
Title: Tank Side Cesium Removal Process System Flow Analysis			
Prepared By: JF Gallegos	Date: 7/22/19	Checked By: KW Dixon	Date: 7/22/19

AFT Fathom 9 (Model) 7/18/2019 Page 25	AFT Fathom Model	

Branch Table

Branch	Name	Object Defined	Inlet Elevation	Elevation Units	Initial Pressure	Initial Pressure Units	Database Source	Special Condition
4	Pump Discharge Nozzle	Yes	675.2	feet				N/A
5	Branch	Yes	675.2	feet				N/A
6	Branch	Yes	677.2	feet				N/A
8	Branch	Yes	681	feet				N/A
10	Branch	Yes	677.2	feet				N/A
13	Branch	Yes	681	feet				N/A
15	Branch	Yes	681	feet				N/A
17	Branch	Yes	681	feet				N/A
19	Branch	Yes	681	feet				N/A
20	Branch	Yes	687	feet				N/A
22	Branch	Yes	687	feet				N/A
23	Branch	Yes	687	feet				N/A
25	Branch	Yes	687	feet				N/A
26	Branch	Yes	687	feet				N/A
28	Branch	Yes	687	feet				N/A
29	Branch	Yes	687	feet				N/A
31	Branch	Yes	687	feet				N/A
33	Branch	Yes	687	feet				N/A
35	Branch	Yes	687	feet				N/A
36	Branch	Yes	687	feet				N/A
38	Branch	Yes	687	feet				N/A
39	Branch	Yes	687	feet				N/A
41	Branch	Yes	687	feet				N/A
43	Branch	Yes	687	feet				N/A
45	Branch	Yes	687	feet				N/A
57	Branch	Yes	681	feet				N/A
59	Branch	Yes	681	feet				N/A

CALCULATION SHEET

Project No. 079701.18.01	Calculation No. 079701.18.01-M-001	Rev. 0	Page No. 43 of 115
Title: Tank Side Cesium Removal Process System Flow Analysis			
Prepared By: JF Gallegos	Date: 7/22/19	Checked By: KW Dixon	Date: 7/22/19

AFT Fathom 9 (Model) 7/18/2019 Page 26	AFT Fathom Model	

Branch	Boundary Flow (+ = in/- = out)	Boundary Flow Units	(Pipe #1) K In, K Out	(Pipe #2) K In, K Out	(Pipe #3) K In, K Out	(Pipe #4) K In, K Out	(Pipe #5) K In, K Out	(Pipe #6) K In, K Out
4			(P3) 0, 0	(P4) 0, 0				
5			(P4) 0, 0	(P5) 0, 0				
6			(P5) 0, 0	(P6) 0, 0				
8			(P7) 0, 0	(P8) 0, 0	(P12) 0, 0			
10			(P9) 0, 0	(P10) 0, 0				
13			(P13) 0, 0	(P14) 0, 0	(P55) 0, 0			
15			(P15) 0, 0	(P16) 0, 0				
17			(P17) 0, 0	(P18) 0, 0				
19			(P19) 0, 0	(P20) 0, 0	(P60) 0, 0			
20			(P20) 0, 0	(P21) 0, 0	(P61) 0, 0	(P63) 0, 0		
22			(P22) 0, 0	(P23) 0, 0	(P62) 0, 0			
23			(P23) 0, 0	(P24) 0, 0				
25			(P25) 0, 0	(P26) 0, 0				
26			(P26) 0, 0	(P27) 0, 0	(P65) 0, 0			
28			(P28) 0, 0	(P29) 0, 0	(P64) 0, 0			
29			(P29) 0, 0	(P30) 0, 0	(P67) 0, 0			
31			(P31) 0, 0	(P32) 0, 0				
33			(P33) 0, 0	(P34) 0, 0				
35			(P35) 0, 0	(P68) 0, 0	(P89) 0, 0			
36			(P35) 0, 0	(P36) 0, 0	(P71) 0, 0			
38			(P37) 0, 0	(P38) 0, 0	(P91) 0, 0			
39			(P38) 0, 0	(P39) 0, 0				
41			(P40) 0, 0	(P41) 0, 0				
43			(P42) 0, 0	(P43) 0, 0	(P72) 0, 0			
45			(P44) 0, 0	(P45) 0, 0	(P66) 0, 0	(P70) 0, 0		
57			(P56) 0, 0	(P57) 0, 0				
59			(P58) 0, 0	(P59) 0, 0				

CALCULATION SHEET

Project No. 079701.18.01	Calculation No. 079701.18.01-M-001	Rev. 0	Page No. 44 of 115
Title: Tank Side Cesium Removal Process System Flow Analysis			
Prepared By: JF Gallegos	Date: 7/22/19	Checked By: KW Dixon	Date: 7/22/19

AFT Fathom 9 (Model) 7/18/2019 Page 27	AFT Fathom Model	

Branch	(Pipe #7) K In, K Out	(Pipe #8) K In, K Out	(Pipe #9) K In, K Out	(Pipe #10) K In, K Out	(Pipe #11) K In, K Out	(Pipe #12) K In, K Out	(Pipe #13) K In, K Out	(Pipe #14) K In, K Out	(Pipe #15) K In, K Out
4									
5									
6									
8									
10									
13									
15									
17									
19									
20									
22									
23									
25									
26									
28									
29									
31									
33									
35									
36									
38									
39									
41									
43									
45									
57									
59									

CALCULATION SHEET

Project No. 079701.18.01	Calculation No. 079701.18.01-M-001	Rev. 0	Page No. 45 of 115
Title: Tank Side Cesium Removal Process System Flow Analysis			
Prepared By: JF Gallegos	Date: 7/22/19	Checked By: KW Dixon	Date: 7/22/19

AFT Fathom 9 (Model) 7/18/2019 Page 28	AFT Fathom Model	

Branch	(Pipe #16) K In, K Out	(Pipe #17) K In, K Out	(Pipe #18) K In, K Out	(Pipe #19) K In, K Out	(Pipe #20) K In, K Out	(Pipe #21) K In, K Out	(Pipe #22) K In, K Out	(Pipe #23) K In, K Out	(Pipe #24) K In, K Out	(Pipe #25) K In, K Out
4										
5										
6										
8										
10										
13										
15										
17										
19										
20										
22										
23										
25										
26										
28										
29										
31										
33										
35										
36										
38										
39										
41										
43										
45										
57										
59										

Control Valve Table

Control Valve	Name	Object Defined	Inlet Elevation	Elevation Units	Initial Pressure	Initial Pressure Units	Database Source	Special Condition	Valve Type
51	WP-PCV-557	Yes	687	feet				None	PSV
81	WP-FCV-306	Yes	681	feet				None	FCV

Control Valve	Control Setting	Control Units	Pressure/ Head Type	Inlet Failure Type	Outlet Failure Type	Full Open Loss Type	Full Open Loss
51	50	psig	Static	Close	Fully Open	None	N/A
81	5	gal/min	N/A	Fully Open	N/A	None	N/A

General Component Table

CALCULATION SHEET

Project No. 079701.18.01	Calculation No. 079701.18.01-M-001	Rev. 0	Page No. 46 of 115
Title: Tank Side Cesium Removal Process System Flow Analysis			
Prepared By: JF Gallegos	Date: 7/22/19	Checked By: KW Dixon	Date: 7/22/19

AFT Fathom 9 (Model)
7/18/2019
Page 29

AFT Fathom Model

General Component	Name	Object Defined	Inlet Elevation	Elevation Units	Initial Pressure	Initial Pressure Units
16	Pre-Filter (WP-FLT-325A)	Yes	681	feet		

General Component	Name	Object Defined	Inlet Elevation	Elevation Units	Initial Pressure	Initial Pressure Units
24	Ion-Exchange Column (WP-IX-400A)	Yes	687	feet		
32	Ion-Exchange Column (WP-IX-400B)	Yes	687	feet		
40	Ion-Exchange Column (WP-IX-400C)	Yes	687	feet		
47	Media Trap	Yes	687	feet		
49	Delay Tank	Yes	687	feet		
58	Pre-Filter (WP-FLT-325B)	Yes	681	feet		

General Component	Database Source	Special Condition	Loss Model	Loss Value	Independent Variable	Ind. Variable Units	Dependent Variable
16		None	Resistance Curve	Variable	Vol. Flow Rate	gal/min	Pressure Loss

General Component	Database Source	Special Condition	Loss Model	Loss Value	Independent Variable	Ind. Variable Units	Dependent Variable
24		None	Resistance Curve	Variable	Vol. Flow Rate	gal/min	Pressure Loss
32		None	Resistance Curve	Variable	Vol. Flow Rate	gal/min	Pressure Loss
40		None	Resistance Curve	Variable	Vol. Flow Rate	gal/min	Pressure Loss
47		None	Resistance Curve	Variable	Vol. Flow Rate	gal/min	Pressure Loss
49		None	K Constant	0			
58		None	Resistance Curve	Variable	Vol. Flow Rate	gal/min	Pressure Loss

General Component	Dep. Variable Units	Loss Constant a	Loss Constant b	Loss Constant c	Loss Constant d	Loss Constant e
16	psid	-4.440892E-16	-0.4	0.12	0	0

General Component	Dep. Variable Units	Loss Constant a	Loss Constant b	Loss Constant c	Loss Constant d	Loss Constant e
24	psid	-1.776357E-15	-0.8	0.48	0	0
32	psid	8.881784E-16	-1.6	0.56	0	0
40	psid	5.77316E-15	-4.440892E-15	0.4	0	0
47	psid	-4.440892E-16	-0.4	0.12	0	0
49						
58	psid	-4.440892E-16	-0.4	0.12	0	0

Orifice Table

Orifice	Name	Object Defined	Inlet Elevation	Elevation Units	Initial Pressure	Initial Pressure Units	Database Source	Orifice Type	Flow Area Type
100	Orifice	Yes	687	feet				Sharp-Edged	Diameter
101	Orifice	Yes	677	feet				Sharp-Edged	Diameter

Orifice	Dimension	Dimension Units	R/D	Restricted Area	Restricted Area Units	Loss Model	Loss Value	Independent Variable	Ind. Variable Units	Dependent Variable
100	0.26563	inches				K Constant	65.24963			
101	0.531	inches				K Constant	529.3999			

CALCULATION SHEET

Project No. 079701.18.01	Calculation No. 079701.18.01-M-001	Rev. 0	Page No. 47 of 115
Title: Tank Side Cesium Removal Process System Flow Analysis			
Prepared By: JF Gallegos	Date: 7/22/19	Checked By: KW Dixon	Date: 7/22/19

AFT Fathom 9 (Model)
7/18/2019
Page 30

AFT Fathom Model

Orifice	Dep. Variable Units	Loss Constant a	Loss Constant b	Loss Constant c	Loss Constant d	Loss Constant e
100						
101						

Pump Table

Pump	Name	Object Defined	Inlet Elevation	Elevation Units	Initial Pressure	Initial Pressure Units	Database Source	Special Condition	Pump Type
1	Pump AP-07F	Yes	625.9	feet	625.5	feet		None	Pump Curve

Pump	Design Flow Rate	Design Flow Rate Units	Current Configuration	Independent Variable	Ind. Variable Units	Dependent Variable	Dep. Variable Units	Pump Curve Constant a
1				Vol. Flow Rate	gal/min	Head Rise	feet	426.922

Pump	Pump Curve Constant b	Pump Curve Constant c	Pump Curve Constant d	Pump Curve Constant e	Runout Flow Rate	Runout Flow Rate Units	Speed	Control When Exceeded Only
1	-0.3101783	-0.002943075	0	0			100	

Pump	Heat Added To Fluid	Heat Added Units
1	0	Percent

Valve Table

Valve	Name	Object Defined	Inlet Elevation	Elevation Units	Initial Pressure	Initial Pressure Units	Database Source	Special Condition	Exit Valve
14	Valve	Yes	681	feet				None	No
18	Valve	Yes	681	feet				None	No
21	Valve	Yes	687	feet				None	No
27	Valve	Yes	687	feet				None	No
30	Valve	Yes	687	feet				None	No
34	Valve	Yes	687	feet				None	No
37	Valve	Yes	687	feet				Closed	No
42	WP-AOV-408C Fail Close	Yes	687	feet				None	No
44	Valve	Yes	687	feet				None	No
46	Valve	Yes	687	feet				None	No
48	Valve	Yes	687	feet				None	No
50	Valve	Yes	687	feet				None	No
53	WP-AOV-560 Fail Close	Yes	681	feet				None	No
56	Valve	Yes	681	feet				Closed	No
60	Valve	Yes	681	feet				None	No
61	Valve	Yes	687	feet				Closed	No
62	Valve	Yes	687	feet				Closed	No
63	Valve	Yes	687	feet				Closed	No
64	Valve	Yes	687	feet				Closed	No

CALCULATION SHEET

Project No. 079701.18.01	Calculation No. 079701.18.01-M-001	Rev. 0	Page No. 48 of 115
Title: Tank Side Cesium Removal Process System Flow Analysis			
Prepared By: JF Gallegos	Date: 7/22/19	Checked By: KW Dixon	Date: 7/22/19

AFT Fathom 9 (Model)
7/18/2019
Page 31

AFT Fathom Model

Valve	Name	Object Defined	Inlet Elevation	Elevation Units	Initial Pressure	Initial Pressure Units	Database Source	Special Condition	Exit Valve
65	Valve	Yes	687	feet				None	No
66	Valve	Yes	687	feet				Closed	No

Valve	Exit Pressure	Exit Pressure Units	Restricted Area	Restricted Area Units	Loss Model	Loss Source	Loss Factor	Percent Open	Open Pct. Data Exists
14					K Constant	N/A	0.078072		No
18					K Constant	N/A	0.078072		No
21					Cv	Cv From Table	32	100	Yes
27					Cv	Cv From Table	32	100	Yes
30					Cv	Cv From Table	32	100	Yes
34					Cv	Cv From Table	32	100	Yes
37					Cv	Cv From Table	32	100	Yes
42					Cv	Cv From Table	32	100	Yes
44					Cv	Cv From Table	32	100	Yes
46					Cv	Cv From Table	32	100	Yes
48					K Constant	N/A	0.078072		No
50					K Constant	N/A	0.078072		No
53					Cv	Cv From Table	32	100	Yes
56					K Constant	N/A	0.078072		No
60					K Constant	N/A	0.078072		No
61					Cv	Cv From Table	32	100	Yes
62					Cv	Cv From Table	32	100	Yes
63					Cv	Cv From Table	32	100	Yes
64					Cv	Cv From Table	32	100	Yes

Valve	Exit Pressure	Exit Pressure Units	Restricted Area	Restricted Area Units	Loss Model	Loss Source	Loss Factor	Percent Open	Open Pct. Data Exists
65					Cv	Cv From Table	32	100	Yes
66					Cv	Cv From Table	32	100	Yes

CALCULATION SHEET

Project No. 079701.18.01	Calculation No. 079701.18.01-M-001	Rev. 0	Page No. 49 of 115
Title: Tank Side Cesium Removal Process System Flow Analysis			
Prepared By: JF Gallegos	Date: 7/22/19	Checked By: KW Dixon	Date: 7/22/19

AFT Fathom 9 (Model) 7/18/2019 Page 32	AFT Fathom Model	

Valve	Independent Variable	Ind. Variable Units	Dependent Variable	Dep. Variable Units	Loss Constant a	Loss Constant b	Loss Constant c	Loss Constant d	Loss Constant e
14									
18									
21									
27									
30									
34									
37									
42									
44									
46									
48									
50									
53									
56									
60									
61									
62									
63									
64									

Valve	Independent Variable	Ind. Variable Units	Dependent Variable	Dep. Variable Units	Loss Constant a	Loss Constant b	Loss Constant c	Loss Constant d	Loss Constant e
65									
66									

CALCULATION SHEET

Project No. 079701.18.01	Calculation No. 079701.18.01-M-001	Rev. 0	Page No. 50 of 115
Title: Tank Side Cesium Removal Process System Flow Analysis			
Prepared By: JF Gallegos	Date: 7/22/19	Checked By: KW Dixon	Date: 7/22/19

APPENDIX D

FATHOM MODEL INPUTS FOR HIGH HEAD LOSS

CALCULATION SHEET

Project No. 079701.18.01	Calculation No. 079701.18.01-M-001	Rev. 0	Page No. 51 of 115
Title: Tank Side Cesium Removal Process System Flow Analysis			
Prepared By: JF Gallegos	Date: 7/22/19	Checked By: KW Dixon	Date: 7/22/19

AFT Fathom 9 (Model) 7/18/2019 Page 1	AFT Fathom Model	

General

Title: AFT Fathom Model
Input File: P:\Clients\Atkins Energy Federal EPC, Inc\078906.18.01 - Design of TSCR Upgrades\Calculations\Mechanical\M-002 \Rev 0\Fathom V&V\TSCR Pump Sizing.fth
Scenario: Base Scenario/Dirty

Number Of Pipes= 71
Number Of Junctions= 65

Pressure/Head Tolerance= 0.0001 relative change
Flow Rate Tolerance= 0.0001 relative change
Temperature Tolerance= 0.0001 relative change
Flow Relaxation= (Automatic)
Pressure Relaxation= (Automatic)

Constant Fluid Property Model
Fluid Database: User Specified
Fluid= User Specified
Density= 1.25 kg/liter
Viscosity= 5 centipoise
Vapor Pressure= 7.52 psia
Viscosity Model= Newtonian
Apply laminar and non-Newtonian correction to: Pipe Fittings & Losses, Junction K factors, Junction Special Losses, Junction Polynomials
Corrections applied to the following junctions: Branch, Reservoir, Assigned Flow, Assigned Pressure, Area Change, Tee or Wye, Spray Discharge, Relief Valve

Ambient Pressure (constant)= 1 atm
Gravitational Acceleration= 1 g
Turbulent Flow Above Reynolds Number= 4000
Laminar Flow Below Reynolds Number= 2300

Pipes

Pipe	Name	Pipe Defined	Length	Length Units	Hydraulic Diameter	Hydraulic Diam. Units	Friction Data Set	Roughness
1	Pump Piping	Yes	2.2	feet	6.065	inches	Standard	0.0018
4	Jumper AP07F-WT-J-[P1-P2-(A)]	Yes	5	feet	2.067	inches	Standard	0.0018
5	Jumper AP-07F-WT-EPDMJ-[A-B]	Yes	45	inches	2	inches	Unspecified	0.00126
6	Process Feed HIHTL (To TSCR)	Yes	330	feet	2	inches	Unspecified	0.00126
7		Yes	3.5	feet	1.61	inches	Standard	0.0018
8		Yes	5.5	feet	1.61	inches	Standard	0.0018
9	Feed Recirc HIHTL (From TSCR)	Yes	335	feet	2	inches	Unspecified	0.00126
10	Jumper AP07F-WT-EPDMJ-[C-D]	Yes	55	inches	2	inches	Unspecified	0.00126
11	Recirc Dropleg (H-14-111336)	Yes	1	feet	2.067	inches	Standard	0.0018
12		Yes	0.5	feet	0.622	inches	Standard	0.0018
13	Pipe	Yes	3.5	feet	0.622	inches	Standard	0.0018
14	Pipe	Yes	0.5	feet	0.622	inches	Standard	0.0018

CALCULATION SHEET

Project No. 079701.18.01	Calculation No. 079701.18.01-M-001	Rev. 0	Page No. 52 of 115
Title: Tank Side Cesium Removal Process System Flow Analysis			
Prepared By: JF Gallegos	Date: 7/22/19	Checked By: KW Dixon	Date: 7/22/19

AFT Fathom 9 (Model)
7/18/2019
Page 2

AFT Fathom Model

Pipe	Name	Pipe Defined	Length	Length Units	Hydraulic Diameter	Hydraulic Diam. Units	Friction Data Set	Roughness
15	Pipe	Yes	2	feet	0.622	inches	Standard	0.0018
16	Pipe	Yes	3	feet	2.067	inches	Standard	0.0018
17	Pipe	Yes	3	feet	1.049	inches	Standard	0.0018
18	Pipe	Yes	2.5	feet	0.622	inches	Standard	0.0018
19	Pipe	Yes	0.5	feet	0.622	inches	Standard	0.0018
20	Pipe	Yes	7	feet	0.622	inches	Standard	0.0018
21	Pipe	Yes	0.5	feet	0.622	inches	Standard	0.0018
22	Pipe	Yes	1	feet	0.622	inches	Standard	0.0018
23	Pipe	Yes	1	feet	0.622	inches	Standard	0.0018
24	Inlet Hose	Yes	1.5	feet	1.049	inches	Standard	0.0018
25	Outlet Hose	Yes	2	feet	1.049	inches	Standard	0.0018
26	Pipe	Yes	2.5	feet	0.622	inches	Standard	0.0018
27	Pipe	Yes	0.5	feet	0.622	inches	Standard	0.0018
28	Pipe	Yes	0.5	feet	0.622	inches	Standard	0.0018
29	Pipe	Yes	2	feet	0.622	inches	Standard	0.0018
30	Pipe	Yes	0.5	feet	0.622	inches	Standard	0.0018
31	Pipe	Yes	2	feet	0.622	inches	Standard	0.0018
32	Inlet Hose	Yes	1.5	feet	1.049	inches	Standard	0.0018
33	Outlet Hose	Yes	2	feet	1.049	inches	Standard	0.0018
34	Pipe	Yes	3	feet	0.622	inches	Standard	0.0018
35	Pipe	Yes	2	feet	0.622	inches	Standard	0.0018
36	Pipe	Yes	0.5	feet	0.622	inches	Standard	0.0018
37	Pipe	Yes	0.5	feet	0.622	inches	Standard	0.0018
38	Pipe	Yes	1.5	feet	0.622	inches	Standard	0.0018
39	Inlet Hose	Yes	1.5	feet	1.049	inches	Standard	0.0018
40	Outlet Hose	Yes	2	feet	1.049	inches	Standard	0.0018
41	Pipe	Yes	1.5	feet	0.622	inches	Standard	0.0018
42	Pipe	Yes	0.5	feet	0.622	inches	Standard	0.0018
43	Pipe	Yes	1	feet	0.622	inches	Standard	0.0018
44	Pipe	Yes	0.5	feet	0.622	inches	Standard	0.0018
45	Pipe	Yes	4	feet	0.622	inches	Standard	0.0018
46	Pipe	Yes	1	feet	0.622	inches	Standard	0.0018
47	Pipe	Yes	4	feet	0.622	inches	Standard	0.0018
48	Pipe	Yes	8	feet	0.622	inches	Standard	0.0018
49	Pipe	Yes	5	feet	0.622	inches	Standard	0.0018
50	Pipe	Yes	6	feet	0.622	inches	Standard	0.0018
51	Pipe	Yes	1	feet	0.622	inches	Standard	0.0018
52	Pipe	Yes	32	feet	0.622	inches	Standard	0.0018
53	Pipe	Yes	2	feet	0.622	inches	Standard	0.0018
54	Treated Effluent HIHTL (From TSCR)	Yes	211	feet	2	inches	Unspecified	0.00126

CALCULATION SHEET

Project No. 079701.18.01	Calculation No. 079701.18.01-M-001	Rev. 0	Page No. 53 of 115
Title: Tank Side Cesium Removal Process System Flow Analysis			
Prepared By: JF Gallegos	Date: 7/22/19	Checked By: KW Dixon	Date: 7/22/19

AFT Fathom 9 (Model)
7/18/2019
Page 3

AFT Fathom Model

Pipe	Name	Pipe Defined	Length	Length Units	Hydraulic Diameter	Hydraulic Diam. Units	Friction Data Set	Roughness
55	Pipe	Yes	1	feet	0.622	inches	Standard	0.0018
56	Pipe	Yes	1.5	feet	0.622	inches	Standard	0.0018
57	Pipe	Yes	3	feet	2.067	inches	Standard	0.0018
58	Pipe	Yes	3	feet	1.049	inches	Standard	0.0018
59	Pipe	Yes	2.5	feet	0.622	inches	Standard	0.0018
60	Pipe	Yes	0.5	feet	0.622	inches	Standard	0.0018
61	Pipe	Yes	12	feet	0.622	inches	Standard	0.0018
62	Pipe	Yes	11.5	feet	0.622	inches	Standard	0.0018
63	Pipe	Yes	0.5	feet	0.622	inches	Standard	0.0018
64	Pipe	Yes	2	feet	0.622	inches	Standard	0.0018
65	Pipe	Yes	1	feet	0.622	inches	Standard	0.0018
66	Pipe	Yes	9.5	feet	0.622	inches	Standard	0.0018
67	Pipe	Yes	0.5	feet	0.622	inches	Standard	0.0018
68	Pipe	Yes	2.5	feet	0.622	inches	Standard	0.0018
70	Pipe	Yes	2	feet	0.622	inches	Standard	0.0018
71	Pipe	Yes	0.5	feet	0.622	inches	Standard	0.0018
72	Pipe	Yes	0.5	feet	0.622	inches	Standard	0.0018
89	Pipe	Yes	0.5	feet	0.622	inches	Standard	0.0018
91	Pipe	Yes	0.5	feet	0.622	inches	Standard	0.0018

Pipe	Roughness Units	Losses (K)	Initial Flow	Initial Flow Units	Junctions (Up,Down)	Geometry	Material	Size
1	inches	1.1974	79.54	gal/min	1, 4	Cylindrical Pipe	Steel - ANSI	6 inch
4	inches	2.226188			4, 5	Cylindrical Pipe	Steel - ANSI	2 inch
5	inches	2.546			5, 6	Cylindrical Pipe	User Specified	
6	inches	3.496	49.00	gal/min	6, 7	Cylindrical Pipe	User Specified	
7	inches	0.06168	49.00	gal/min	7, 8	Cylindrical Pipe	Steel - ANSI	1-1/2 inch
8	inches	0.34952	44.02	gal/min	8, 9	Cylindrical Pipe	Steel - ANSI	1-1/2 inch
9	inches	3.496	44.02	gal/min	9, 10	Cylindrical Pipe	User Specified	
10	inches	2.546			10, 11	Cylindrical Pipe	User Specified	
11	inches	1.50928	44.02	gal/min	11, 12	Cylindrical Pipe	Steel - ANSI	2 inch
12	inches	0.1763804	5.000	gal/min	8, 81	Cylindrical Pipe	Steel - ANSI	1/2 inch
13	inches	0.886744			81, 13	Cylindrical Pipe	Steel - ANSI	1/2 inch
14	inches	1.1			13, 14	Cylindrical Pipe	Steel - ANSI	1/2 inch

CALCULATION SHEET

Project No. 079701.18.01	Calculation No. 079701.18.01-M-001	Rev. 0	Page No. 54 of 115
Title: Tank Side Cesium Removal Process System Flow Analysis			
Prepared By: JF Gallegos	Date: 7/22/19	Checked By: KW Dixon	Date: 7/22/19

AFT Fathom 9 (Model)
7/18/2019
Page 4

AFT Fathom Model

Pipe	Roughness Units	Losses (K)	Initial Flow	Initial Flow Units	Junctions (Up,Down)	Geometry	Material	Size
15	inches	0.404336			14, 15	Cylindrical Pipe	Steel - ANSI	1/2 inch
16	inches	1.47732			15, 16	Cylindrical Pipe	Steel - ANSI	2 inch
17	inches	0.427668			16, 17	Cylindrical Pipe	Steel - ANSI	1 inch
18	inches	2.564336			17, 18	Cylindrical Pipe	Steel - ANSI	1/2 inch
19	inches	0			18, 19	Cylindrical Pipe	Steel - ANSI	1/2 inch
20	inches	1.504336			19, 20	Cylindrical Pipe	Steel - ANSI	1/2 inch
21	inches	2.2			20, 21	Cylindrical Pipe	Steel - ANSI	1/2 inch
22	inches	0.04			21, 22	Cylindrical Pipe	Steel - ANSI	1/2 inch
23	inches	0.118072			22, 23	Cylindrical Pipe	Steel - ANSI	1/2 inch
24	inches	2.998949			23, 24	Cylindrical Pipe	Steel - ANSI	1 inch
25	inches	0.957768			24, 25	Cylindrical Pipe	Steel - ANSI	1 inch
26	inches	0.2911789			25, 26	Cylindrical Pipe	Steel - ANSI	1/2 inch
27	inches	0.04			26, 27	Cylindrical Pipe	Steel - ANSI	1/2 inch
28	inches	1.1			27, 28	Cylindrical Pipe	Steel - ANSI	1/2 inch
29	inches	0			28, 29	Cylindrical Pipe	Steel - ANSI	1/2 inch
30	inches	1.1			29, 30	Cylindrical Pipe	Steel - ANSI	1/2 inch
31	inches	0.118072			30, 31	Cylindrical Pipe	Steel - ANSI	1/2 inch
32	inches	2.998949			31, 32	Cylindrical Pipe	Steel - ANSI	1 inch
33	inches	0.957768			32, 33	Cylindrical Pipe	Steel - ANSI	1 inch
34	inches	0.3311789			33, 34	Cylindrical Pipe	Steel - ANSI	1/2 inch
35	inches	0			35, 36	Cylindrical Pipe	Steel - ANSI	1/2 inch
36	inches	1.1			36, 37	Cylindrical Pipe	Steel - ANSI	1/2 inch
37	inches	0.04			37, 38	Cylindrical Pipe	Steel - ANSI	1/2 inch
38	inches	0.118072			38, 39	Cylindrical Pipe	Steel - ANSI	1/2 inch
39	inches	2.998949			39, 40	Cylindrical Pipe	Steel - ANSI	1 inch
40	inches	0.957768			40, 41	Cylindrical Pipe	Steel - ANSI	1 inch
41	inches	0.1331069			41, 42	Cylindrical Pipe	Steel - ANSI	1/2 inch
42	inches	0			42, 43	Cylindrical Pipe	Steel - ANSI	1/2 inch
43	inches	0.12			43, 44	Cylindrical Pipe	Steel - ANSI	1/2 inch
44	inches	1.1			44, 45	Cylindrical Pipe	Steel - ANSI	1/2 inch
45	inches	0.444336			45, 46	Cylindrical Pipe	Steel - ANSI	1/2 inch
46	inches	1.1			46, 47	Cylindrical Pipe	Steel - ANSI	1/2 inch
47	inches	0.768672			47, 48	Cylindrical Pipe	Steel - ANSI	1/2 inch
48	inches	1.093008			48, 49	Cylindrical Pipe	Steel - ANSI	1/2 inch
49	inches	0.768672			49, 50	Cylindrical Pipe	Steel - ANSI	1/2 inch
50	inches	1.173008			50, 51	Cylindrical Pipe	Steel - ANSI	1/2 inch
51	inches	0			51, 52	Cylindrical Pipe	Steel - ANSI	1/2 inch
52	inches	1.86168			52, 53	Cylindrical Pipe	Steel - ANSI	1/2 inch
53	inches	0			53, 54	Cylindrical Pipe	Steel - ANSI	1/2 inch
54	inches	1.615	5.000	gal/min	54, 55	Cylindrical Pipe	User Specified	

CALCULATION SHEET

Project No. 079701.18.01	Calculation No. 079701.18.01-M-001	Rev. 0	Page No. 55 of 115
Title: Tank Side Cesium Removal Process System Flow Analysis			
Prepared By: JF Gallegos	Date: 7/22/19	Checked By: KW Dixon	Date: 7/22/19

AFT Fathom 9 (Model) 7/18/2019 Page 5	AFT Fathom Model	

Pipe	Roughness Units	Losses (K)	Initial Flow	Initial Flow Units	Junctions (Up,Down)	Geometry	Material	Size
55	inches	0.404336			13, 56	Cylindrical Pipe	Steel - ANSI	1/2 inch
56	inches	1.1			56, 57	Cylindrical Pipe	Steel - ANSI	1/2 inch
57	inches	1.47732			57, 58	Cylindrical Pipe	Steel - ANSI	2 inch
58	inches	0.427668			58, 59	Cylindrical Pipe	Steel - ANSI	1 inch
59	inches	2.564336			59, 60	Cylindrical Pipe	Steel - ANSI	1/2 inch
60	inches	0			60, 19	Cylindrical Pipe	Steel - ANSI	1/2 inch
61	inches	2.92168			20, 64	Cylindrical Pipe	Steel - ANSI	1/2 inch
62	inches	1.464336			66, 22	Cylindrical Pipe	Steel - ANSI	1/2 inch
63	inches	0.08			20, 61	Cylindrical Pipe	Steel - ANSI	1/2 inch
64	inches	0.04			61, 28	Cylindrical Pipe	Steel - ANSI	1/2 inch
65	inches	1.14			26, 62	Cylindrical Pipe	Steel - ANSI	1/2 inch
66	inches	2.557344			62, 45	Cylindrical Pipe	Steel - ANSI	1/2 inch
67	inches	0.04			29, 63	Cylindrical Pipe	Steel - ANSI	1/2 inch
68	inches	0.04			63, 35	Cylindrical Pipe	Steel - ANSI	1/2 inch
70	inches	0.04			65, 45	Cylindrical Pipe	Steel - ANSI	1/2 inch
71	inches	0.04			36, 65	Cylindrical Pipe	Steel - ANSI	1/2 inch
72	inches	1.464336			43, 66	Cylindrical Pipe	Steel - ANSI	1/2 inch
89	inches	1.1			34, 35	Cylindrical Pipe	Steel - ANSI	1/2 inch
91	inches	1.1			64, 38	Cylindrical Pipe	Steel - ANSI	1/2 inch

Pipe	Type	Special Condition
1	schedule 40	None
4	schedule 40	None
5		None
6		None
7	STD (schedule 40)	None
8	STD (schedule 40)	None
9		None
10		None
11	schedule 40	None
12	STD (schedule 40)	None
13	STD (schedule 40)	None
14	STD (schedule 40)	None

CALCULATION SHEET

Project No. 079701.18.01	Calculation No. 079701.18.01-M-001	Rev. 0	Page No. 56 of 115
Title: Tank Side Cesium Removal Process System Flow Analysis			
Prepared By: JF Gallegos	Date: 7/22/19	Checked By: KW Dixon	Date: 7/22/19

AFT Fathom 9 (Model)
7/18/2019
Page 6

AFT Fathom Model

Pipe	Type	Special Condition
15	STD (schedule 40)	None
16	STD (schedule 40)	None
17	STD (schedule 40)	None
18	STD (schedule 40)	None
19	STD (schedule 40)	None
20	STD (schedule 40)	None
21	STD (schedule 40)	None
22	STD (schedule 40)	None
23	STD (schedule 40)	None
24	STD (schedule 40)	None
25	STD (schedule 40)	None
26	STD (schedule 40)	None
27	STD (schedule 40)	None
28	STD (schedule 40)	None
29	STD (schedule 40)	None
30	STD (schedule 40)	None
31	STD (schedule 40)	None
32	STD (schedule 40)	None
33	STD (schedule 40)	None
34	STD (schedule 40)	None
35	STD (schedule 40)	None
36	STD (schedule 40)	None
37	STD (schedule 40)	None
38	STD (schedule 40)	None
39	STD (schedule 40)	None
40	STD (schedule 40)	None
41	STD (schedule 40)	None
42	STD (schedule 40)	None
43	STD (schedule 40)	None
44	STD (schedule 40)	None
45	STD (schedule 40)	None
46	STD (schedule 40)	None
47	STD (schedule 40)	None
48	STD (schedule 40)	None
49	STD (schedule 40)	None
50	STD (schedule 40)	None
51	STD (schedule 40)	None
52	STD (schedule 40)	None
53	STD (schedule 40)	None
54		None

CALCULATION SHEET

Project No. 079701.18.01	Calculation No. 079701.18.01-M-001	Rev. 0	Page No. 57 of 115
Title: Tank Side Cesium Removal Process System Flow Analysis			
Prepared By: JF Gallegos	Date: 7/22/19	Checked By: KW Dixon	Date: 7/22/19

AFT Fathom 9 (Model) 7/18/2019 Page 7	AFT Fathom Model	

Pipe	Type	Special Condition
55	STD (schedule 40)	None
56	STD (schedule 40)	None
57	STD (schedule 40)	None
58	STD (schedule 40)	None
59	STD (schedule 40)	None
60	STD (schedule 40)	None
61	STD (schedule 40)	None
62	STD (schedule 40)	None
63	STD (schedule 40)	None
64	STD (schedule 40)	None
65	STD (schedule 40)	None
66	STD (schedule 40)	None
67	STD (schedule 40)	None
68	STD (schedule 40)	None
70	STD (schedule 40)	None
71	STD (schedule 40)	None
72	STD (schedule 40)	None
89	STD (schedule 40)	None
91	STD (schedule 40)	None

Pipe Fittings & Losses

Pipe	Total K	Area Change	Elbow/Bend Mitre	Elbow/Bend Smooth Flanged	Valve Ball	Valve Three-way	Other Tee
1	1.2		1 (0.9)	1 (0.3)			
4	2.23		1 (1.13)	2 (0.53)		1 (0.57)	
5	2.55		2 (2.28)	1 (0.27)			
6	3.5			11 (3.5)			
7	0.06				1 (0.06)		
8	0.35			1 (0.29)	1 (0.06)		
9	3.5			11 (3.5)			
10	2.55		2 (2.28)	1 (0.27)			
11	1.51		1 (1.13)	1 (0.38)			
12	0.18	1 (0.18)					
13	0.89			2 (0.73)	1 (0.08)		2 (0.08)
14	1.1						1 (1.1)
15	0.4			1 (0.36)			1 (0.04)
16	1.48			1 (0.32)	1 (0.06)		1 (1.1)
17	0.43			1 (0.32)	1 (0.07)		1 (0.04)
18	2.56			1 (0.36)			2 (2.2)
20	1.5			1 (0.36)			2 (1.14)

CALCULATION SHEET

Project No. 079701.18.01	Calculation No. 079701.18.01-M-001	Rev. 0	Page No. 58 of 115
Title: Tank Side Cesium Removal Process System Flow Analysis			
Prepared By: JF Gallegos	Date: 7/22/19	Checked By: KW Dixon	Date: 7/22/19

AFT Fathom 9 (Model)
7/18/2019
Page 8

AFT Fathom Model

Pipe	Total K	Area Change	Elbow/Bend Mitre	Elbow/Bend Smooth Flanged	Valve Ball	Valve Three-way	Other Tee
21	2.2						2 (2.2)
22	0.04						1 (0.04)
23	0.12				1 (0.08)		1 (0.04)
24	3.0	1 (2.32)		3 (0.68)			
25	0.96			3 (0.96)			
26	0.29	1 (0.13)			1 (0.08)		2 (0.08)
27	0.04						1 (0.04)
28	1.1						1 (1.1)
30	1.1						1 (1.1)
31	0.12				1 (0.08)		1 (0.04)
32	3.0	1 (2.32)		3 (0.68)			
33	0.96			3 (0.96)			
34	0.33	1 (0.13)			1 (0.08)		3 (0.12)
36	1.1						1 (1.1)
37	0.04						1 (0.04)
38	0.12				1 (0.08)		1 (0.04)
39	3.0	1 (2.32)		3 (0.68)			
40	0.96			3 (0.96)			
41	0.13	1 (0.13)					
43	0.12						3 (0.12)
44	1.1						1 (1.1)
45	0.44			1 (0.36)			2 (0.08)
46	1.1						1 (1.1)
47	0.77			2 (0.73)			1 (0.04)
48	1.09			3 (1.09)			
49	0.77			2 (0.73)			1 (0.04)
50	1.17			3 (1.09)			2 (0.08)
52	1.86			5 (1.82)			1 (0.04)
54	1.62			5 (1.62)			
55	0.4			1 (0.36)			1 (0.04)
56	1.1						1 (1.1)
57	1.48			1 (0.32)	1 (0.06)		1 (1.1)
58	0.43			1 (0.32)	1 (0.07)		1 (0.04)
59	2.56			1 (0.36)			2 (2.2)
61	2.92			5 (1.82)			1 (1.1)
62	1.46			1 (0.36)			1 (1.1)
63	0.08						2 (0.08)
64	0.04						1 (0.04)
65	1.14						2 (1.14)
66	2.56			4 (1.46)			1 (1.1)

CALCULATION SHEET

Project No. 079701.18.01	Calculation No. 079701.18.01-M-001	Rev. 0	Page No. 59 of 115
Title: Tank Side Cesium Removal Process System Flow Analysis			
Prepared By: JF Gallegos	Date: 7/22/19	Checked By: KW Dixon	Date: 7/22/19

AFT Fathom 9 (Model)
7/18/2019
Page 9

AFT Fathom Model

Pipe	Total K	Area Change	Elbow/Bend Mitre	Elbow/Bend Smooth Flanged	Valve Ball	Valve Three-way	Other Tee
67	0.04						1 (0.04)
68	0.04						1 (0.04)
70	0.04						1 (0.04)
71	0.04						1 (0.04)
72	1.46			1 (0.36)			1 (1.1)
89	1.1						1 (1.1)
91	1.1						1 (1.1)

Pipe Detail Summary

Pipe 1 Detailed Input Data
Name: Pump Piping
Geometry: Cylindrical Pipe
Material: Steel - ANSI 6 inch schedule 40
Inner Diameter= 6.065 inches
Length= 2.2 feet
Absolute Roughness= 0.0018 inches
Fittings & Losses= 1.1974
Elbow/Bend:
Mitre, General, 90 deg., K= 0.90, Quantity= 1
Smooth Flanged, r/D=1, 90 deg., K= 0.30, Quantity= 1

Pipe 4 Detailed Input Data
Name: Jumper AP07F-WT-J-[P1-P2-(A)]
Geometry: Cylindrical Pipe
Material: Steel - ANSI 2 inch schedule 40
Inner Diameter= 2.067 inches
Length= 5 feet
Absolute Roughness= 0.0018 inches
Fittings & Losses= 2.226188
Elbow/Bend:
Mitre, General, 90 deg., K= 1.13, Quantity= 1
Smooth Flanged, r/D=1.5, 90 deg., K= 0.26, Quantity= 2
Valve:
Three-way, Through flow, K= 0.57, Quantity= 1

Pipe 5 Detailed Input Data
Name: Jumper AP-07F-WT-EPDMJ-[A-B]
Geometry: Cylindrical Pipe
Material: Unspecified
Inner Diameter= 2 inches
Length= 45 inches
Absolute Roughness= 0.00126 inches
Fittings & Losses= 2.546
Elbow/Bend:
Mitre, General, 90 deg., K= 1.14, Quantity= 2
Smooth Flanged, r/D=1.5, 90 deg., K= 0.27, Quantity= 1

Pipe 6 Detailed Input Data
Name: Process Feed HIHTL (To TSCR)
Geometry: Cylindrical Pipe

CALCULATION SHEET

Project No. 079701.18.01	Calculation No. 079701.18.01-M-001	Rev. 0	Page No. 60 of 115
Title: Tank Side Cesium Removal Process System Flow Analysis			
Prepared By: JF Gallegos	Date: 7/22/19	Checked By: KW Dixon	Date: 7/22/19

AFT Fathom 9 (Model) 7/18/2019 Page 10	AFT Fathom Model	

Material: Unspecified
Inner Diameter= 2 inches
Length= 330 feet
Absolute Roughness= 0.00126 inches
Fittings & Losses= 3.496
Elbow/Bend:
Smooth Flanged, r/D=1.5, 90 deg., K= 0.27, Quantity= 1
Smooth Flanged, r/D=6, 90 deg., K= 0.32, Quantity= 10

Pipe 7 Detailed Input Data
Name:
Geometry: Cylindrical Pipe
Material: Steel - ANSI 1-1/2 inch STD (schedule 40)
Inner Diameter= 1.61 inches
Length= 3.5 feet
Absolute Roughness= 0.0018 inches
Fittings & Losses= 0.06168
Valve:
Ball, PO=100, K= 0.06, Quantity= 1

Pipe 8 Detailed Input Data
Name:
Geometry: Cylindrical Pipe
Material: Steel - ANSI 1-1/2 inch STD (schedule 40)
Inner Diameter= 1.61 inches
Length= 5.5 feet
Absolute Roughness= 0.0018 inches
Fittings & Losses= 0.34952
Elbow/Bend:
Smooth Flanged, r/D=1.5, 90 deg., K= 0.29, Quantity= 1
Valve:
Ball, PO=100, K= 0.06, Quantity= 1

Pipe 9 Detailed Input Data
Name: Feed Recirc HIHTL (From TSCR)
Geometry: Cylindrical Pipe
Material: Unspecified
Inner Diameter= 2 inches
Length= 335 feet
Absolute Roughness= 0.00126 inches
Fittings & Losses= 3.496
Elbow/Bend:
Smooth Flanged, r/D=1.5, 90 deg., K= 0.27, Quantity= 1
Smooth Flanged, r/D=6, 90 deg., K= 0.32, Quantity= 10

Pipe 10 Detailed Input Data
Name: Jumper AP07F-WT-EPDMJ-[C-D]
Geometry: Cylindrical Pipe
Material: Unspecified
Inner Diameter= 2 inches
Length= 55 inches
Absolute Roughness= 0.00126 inches
Fittings & Losses= 2.546
Elbow/Bend:
Mitre, General, 90 deg., K= 1.14, Quantity= 2
Smooth Flanged, r/D=1.5, 90 deg., K= 0.27, Quantity= 1

CALCULATION SHEET

Project No. 079701.18.01	Calculation No. 079701.18.01-M-001	Rev. 0	Page No. 61 of 115
Title: Tank Side Cesium Removal Process System Flow Analysis			
Prepared By: JF Gallegos	Date: 7/22/19	Checked By: KW Dixon	Date: 7/22/19

AFT Fathom 9 (Model) 7/18/2019 Page 11	AFT Fathom Model	

Pipe 11 Detailed Input Data
- Name: Recirc Dropleg (H-14-111336)
- Geometry: Cylindrical Pipe
- Material: Steel - ANSI 2 inch schedule 40
- Inner Diameter= 2.067 inches
- Length= 1 feet
- Absolute Roughness= 0.0018 inches
- Fittings & Losses= 1.50928
- Elbow/Bend:
  - Mitre, General, 90 deg., K= 1.13, Quantity= 1
  - Smooth Flanged, r/D=1, 90 deg., K= 0.38, Quantity= 1

Pipe 12 Detailed Input Data
- Name:
- Geometry: Cylindrical Pipe
- Material: Steel - ANSI 1/2 inch STD (schedule 40)
- Inner Diameter= 0.622 inches
- Length= 0.5 feet
- Absolute Roughness= 0.0018 inches
- Fittings & Losses= 0.1763804
- Area Change:
  - Contraction to Pipe Area, K= 0.18, Quantity= 1

Pipe 13 Detailed Input Data
- Name: Pipe
- Geometry: Cylindrical Pipe
- Material: Steel - ANSI 1/2 inch STD (schedule 40)
- Inner Diameter= 0.622 inches
- Length= 3.5 feet
- Absolute Roughness= 0.0018 inches
- Fittings & Losses= 0.886744
- Elbow/Bend:
  - Smooth Flanged, r/D=1.5, 90 deg., K= 0.36, Quantity= 2
- Valve:
  - Ball, PO=100, K= 0.08, Quantity= 1
- Other:
  - Tee, Through flow (dead branch), K= 0.04, Quantity= 2

Pipe 14 Detailed Input Data
- Name: Pipe
- Geometry: Cylindrical Pipe
- Material: Steel - ANSI 1/2 inch STD (schedule 40)
- Inner Diameter= 0.622 inches
- Length= 0.5 feet
- Absolute Roughness= 0.0018 inches
- Fittings & Losses= 1.1
- Other:
  - Tee, Branch flow (dead run), K= 1.10, Quantity= 1

Pipe 15 Detailed Input Data
- Name: Pipe
- Geometry: Cylindrical Pipe
- Material: Steel - ANSI 1/2 inch STD (schedule 40)
- Inner Diameter= 0.622 inches
- Length= 2 feet
- Absolute Roughness= 0.0018 inches
- Fittings & Losses= 0.404336

CALCULATION SHEET

Project No. 079701.18.01	Calculation No. 079701.18.01-M-001	Rev. 0	Page No. 62 of 115
Title: Tank Side Cesium Removal Process System Flow Analysis			
Prepared By: JF Gallegos	Date: 7/22/19	Checked By: KW Dixon	Date: 7/22/19

AFT Fathom 9 (Model) 7/18/2019 Page 12	AFT Fathom Model	

Elbow/Bend:
Smooth Flanged, r/D=1.5, 90 deg., K= 0.36, Quantity= 1
Other:
Tee, Through flow (dead branch), K= 0.04, Quantity= 1

Pipe 16 Detailed Input Data
Name: Pipe
Geometry: Cylindrical Pipe
Material: Steel - ANSI 2 inch STD (schedule 40)
Inner Diameter= 2.067 inches
Length= 3 feet
Absolute Roughness= 0.0018 inches
Fittings & Losses= 1.47732
Elbow/Bend:
Smooth Flanged, r/D=6, 90 deg., K= 0.32, Quantity= 1
Valve:
Ball, PO=100, K= 0.06, Quantity= 1
Other:
Tee, Branch flow (dead run), K= 1.10, Quantity= 1

Pipe 17 Detailed Input Data
Name: Pipe
Geometry: Cylindrical Pipe
Material: Steel - ANSI 1 inch STD (schedule 40)
Inner Diameter= 1.049 inches
Length= 3 feet
Absolute Roughness= 0.0018 inches
Fittings & Losses= 0.427668
Elbow/Bend:
Smooth Flanged, r/D=1.5, 90 deg., K= 0.32, Quantity= 1
Valve:
Ball, PO=100, K= 0.07, Quantity= 1
Other:
Tee, Through flow (dead branch), K= 0.04, Quantity= 1

Pipe 18 Detailed Input Data
Name: Pipe
Geometry: Cylindrical Pipe
Material: Steel - ANSI 1/2 inch STD (schedule 40)
Inner Diameter= 0.622 inches
Length= 2.5 feet
Absolute Roughness= 0.0018 inches
Fittings & Losses= 2.564336
Elbow/Bend:
Smooth Flanged, r/D=1.5, 90 deg., K= 0.36, Quantity= 1
Other:
Tee, Branch flow (dead run), K= 1.10, Quantity= 2

Pipe 19 Detailed Input Data
Name: Pipe
Geometry: Cylindrical Pipe
Material: Steel - ANSI 1/2 inch STD (schedule 40)
Inner Diameter= 0.622 inches
Length= 0.5 feet
Absolute Roughness= 0.0018 inches
Fittings & Losses= 0

CALCULATION SHEET

Project No. 079701.18.01	Calculation No. 079701.18.01-M-001	Rev. 0	Page No. 63 of 115
Title: Tank Side Cesium Removal Process System Flow Analysis			
Prepared By: JF Gallegos	Date: 7/22/19	Checked By: KW Dixon	Date: 7/22/19

AFT Fathom 9 (Model) 7/18/2019 Page 13	AFT Fathom Model	

Pipe 20 Detailed Input Data
Name: Pipe
Geometry: Cylindrical Pipe
Material: Steel - ANSI 1/2 inch STD (schedule 40)
Inner Diameter= 0.622 inches
Length= 7 feet
Absolute Roughness= 0.0018 inches
Fittings & Losses= 1.504336
Elbow/Bend:
Smooth Flanged, r/D=1.5, 90 deg., K= 0.36, Quantity= 1
Other:
Tee, Through flow (dead branch), K= 0.04, Quantity= 1
Tee, Branch flow (dead run), K= 1.10, Quantity= 1

Pipe 21 Detailed Input Data
Name: Pipe
Geometry: Cylindrical Pipe
Material: Steel - ANSI 1/2 inch STD (schedule 40)
Inner Diameter= 0.622 inches
Length= 0.5 feet
Absolute Roughness= 0.0018 inches
Fittings & Losses= 2.2
Other:
Tee, Branch flow (dead run), K= 1.10, Quantity= 2

Pipe 22 Detailed Input Data
Name: Pipe
Geometry: Cylindrical Pipe
Material: Steel - ANSI 1/2 inch STD (schedule 40)
Inner Diameter= 0.622 inches
Length= 1 feet
Absolute Roughness= 0.0018 inches
Fittings & Losses= 0.04
Other:
Tee, Through flow (dead branch), K= 0.04, Quantity= 1

Pipe 23 Detailed Input Data
Name: Pipe
Geometry: Cylindrical Pipe
Material: Steel - ANSI 1/2 inch STD (schedule 40)
Inner Diameter= 0.622 inches
Length= 1 feet
Absolute Roughness= 0.0018 inches
Fittings & Losses= 0.118072
Valve:
Ball, PO=100, K= 0.08, Quantity= 1
Other:
Tee, Through flow (dead branch), K= 0.04, Quantity= 1

Pipe 24 Detailed Input Data
Name: Inlet Hose
Geometry: Cylindrical Pipe
Material: Steel - ANSI 1 inch STD (schedule 40)
Inner Diameter= 1.049 inches
Length= 1.5 feet
Absolute Roughness= 0.0018 inches
Fittings & Losses= 2.998949

CALCULATION SHEET

Project No. 079701.18.01	Calculation No. 079701.18.01-M-001	Rev. 0	Page No. 64 of 115
Title: Tank Side Cesium Removal Process System Flow Analysis			
Prepared By: JF Gallegos	Date: 7/22/19	Checked By: KW Dixon	Date: 7/22/19

AFT Fathom 9 (Model) 7/18/2019 Page 14	AFT Fathom Model	

Elbow/Bend:
Smooth Flanged, r/D=1.5, 45 deg., K= 0.23, Quantity= 3
Area Change:
Expansion to Pipe Area, K= 2.32, Quantity= 1

Pipe 25 Detailed Input Data
Name: Outlet Hose
Geometry: Cylindrical Pipe
Material: Steel - ANSI 1 inch STD (schedule 40)
Inner Diameter= 1.049 inches
Length= 2 feet
Absolute Roughness= 0.0018 inches
Fittings & Losses= 0.957768
Elbow/Bend:
Smooth Flanged, r/D=1.5, 90 deg., K= 0.32, Quantity= 3

Pipe 26 Detailed Input Data
Name: Pipe
Geometry: Cylindrical Pipe
Material: Steel - ANSI 1/2 inch STD (schedule 40)
Inner Diameter= 0.622 inches
Length= 2.5 feet
Absolute Roughness= 0.0018 inches
Fittings & Losses= 0.2911789
Valve:
Ball, PO=100, K= 0.08, Quantity= 1
Other:
Tee, Through flow (dead branch), K= 0.04, Quantity= 2
Area Change:
Contraction to Pipe Area, K= 0.13, Quantity= 1

Pipe 27 Detailed Input Data
Name: Pipe
Geometry: Cylindrical Pipe
Material: Steel - ANSI 1/2 inch STD (schedule 40)
Inner Diameter= 0.622 inches
Length= 0.5 feet
Absolute Roughness= 0.0018 inches
Fittings & Losses= 0.04
Other:
Tee, Through flow (dead branch), K= 0.04, Quantity= 1

Pipe 28 Detailed Input Data
Name: Pipe
Geometry: Cylindrical Pipe
Material: Steel - ANSI 1/2 inch STD (schedule 40)
Inner Diameter= 0.622 inches
Length= 0.5 feet
Absolute Roughness= 0.0018 inches
Fittings & Losses= 1.1
Other:
Tee, Branch flow (dead run), K= 1.10, Quantity= 1

Pipe 29 Detailed Input Data
Name: Pipe
Geometry: Cylindrical Pipe
Material: Steel - ANSI 1/2 inch STD (schedule 40)

CALCULATION SHEET

Project No. 079701.18.01	Calculation No. 079701.18.01-M-001	Rev. 0	Page No. 65 of 115
Title: Tank Side Cesium Removal Process System Flow Analysis			
Prepared By: JF Gallegos	Date: 7/22/19	Checked By: KW Dixon	Date: 7/22/19

AFT Fathom 9 (Model) 7/18/2019 Page 15	AFT Fathom Model	

Inner Diameter= 0.622 inches
Length= 2 feet
Absolute Roughness= 0.0018 inches
Fittings & Losses= 0

Pipe 30 Detailed Input Data
Name: Pipe
Geometry: Cylindrical Pipe
Material: Steel - ANSI 1/2 inch STD (schedule 40)
Inner Diameter= 0.622 inches
Length= 0.5 feet
Absolute Roughness= 0.0018 inches
Fittings & Losses= 1.1
Other:
Tee, Branch flow (dead run), K= 1.10, Quantity= 1

Pipe 31 Detailed Input Data
Name: Pipe
Geometry: Cylindrical Pipe
Material: Steel - ANSI 1/2 inch STD (schedule 40)
Inner Diameter= 0.622 inches
Length= 2 feet
Absolute Roughness= 0.0018 inches
Fittings & Losses= 0.118072
Valve:
Ball, PO=100, K= 0.08, Quantity= 1
Other:
Tee, Through flow (dead branch), K= 0.04, Quantity= 1

Pipe 32 Detailed Input Data
Name: Inlet Hose
Geometry: Cylindrical Pipe
Material: Steel - ANSI 1 inch STD (schedule 40)
Inner Diameter= 1.049 inches
Length= 1.5 feet
Absolute Roughness= 0.0018 inches
Fittings & Losses= 2.998949
Elbow/Bend:
Smooth Flanged, r/D=1.5, 45 deg., K= 0.23, Quantity= 3
Area Change:
Expansion to Pipe Area, K= 2.32, Quantity= 1

Pipe 33 Detailed Input Data
Name: Outlet Hose
Geometry: Cylindrical Pipe
Material: Steel - ANSI 1 inch STD (schedule 40)
Inner Diameter= 1.049 inches
Length= 2 feet
Absolute Roughness= 0.0018 inches
Fittings & Losses= 0.957768
Elbow/Bend:
Smooth Flanged, r/D=1.5, 90 deg., K= 0.32, Quantity= 3

Pipe 34 Detailed Input Data
Name: Pipe
Geometry: Cylindrical Pipe
Material: Steel - ANSI 1/2 inch STD (schedule 40)

CALCULATION SHEET

Project No. 079701.18.01	Calculation No. 079701.18.01-M-001	Rev. 0	Page No. 66 of 115
Title: Tank Side Cesium Removal Process System Flow Analysis			
Prepared By: JF Gallegos	Date: 7/22/19	Checked By: KW Dixon	Date: 7/22/19

AFT Fathom 9 (Model) 7/18/2019 Page 16	AFT Fathom Model	

Inner Diameter= 0.622 inches
Length= 3 feet
Absolute Roughness= 0.0018 inches
Fittings & Losses= 0.3311789
Valve:
Ball, PO=100, K= 0.08, Quantity= 1
Other:
Tee, Through flow (dead branch), K= 0.04, Quantity= 3
Area Change:
Contraction to Pipe Area, K= 0.13, Quantity= 1

Pipe 35 Detailed Input Data
Name: Pipe
Geometry: Cylindrical Pipe
Material: Steel - ANSI 1/2 inch STD (schedule 40)
Inner Diameter= 0.622 inches
Length= 2 feet
Absolute Roughness= 0.0018 inches
Fittings & Losses= 0

Pipe 36 Detailed Input Data
Name: Pipe
Geometry: Cylindrical Pipe
Material: Steel - ANSI 1/2 inch STD (schedule 40)
Inner Diameter= 0.622 inches
Length= 0.5 feet
Absolute Roughness= 0.0018 inches
Fittings & Losses= 1.1
Other:
Tee, Branch flow (dead run), K= 1.10, Quantity= 1

Pipe 37 Detailed Input Data
Name: Pipe
Geometry: Cylindrical Pipe
Material: Steel - ANSI 1/2 inch STD (schedule 40)
Inner Diameter= 0.622 inches
Length= 0.5 feet
Absolute Roughness= 0.0018 inches
Fittings & Losses= 0.04
Other:
Tee, Through flow (dead branch), K= 0.04, Quantity= 1

Pipe 38 Detailed Input Data
Name: Pipe
Geometry: Cylindrical Pipe
Material: Steel - ANSI 1/2 inch STD (schedule 40)
Inner Diameter= 0.622 inches
Length= 1.5 feet
Absolute Roughness= 0.0018 inches
Fittings & Losses= 0.118072
Valve:
Ball, PO=100, K= 0.08, Quantity= 1
Other:
Tee, Through flow (dead branch), K= 0.04, Quantity= 1

Pipe 39 Detailed Input Data
Name: Inlet Hose

CALCULATION SHEET

Project No. 079701.18.01	Calculation No. 079701.18.01-M-001	Rev. 0	Page No. 67 of 115
Title: Tank Side Cesium Removal Process System Flow Analysis			
Prepared By: JF Gallegos	Date: 7/22/19	Checked By: KW Dixon	Date: 7/22/19

AFT Fathom 9 (Model) 7/18/2019 Page 17	AFT Fathom Model	

Geometry: Cylindrical Pipe
Material: Steel - ANSI 1 inch STD (schedule 40)
Inner Diameter= 1.049 inches
Length= 1.5 feet
Absolute Roughness= 0.0018 inches
Fittings & Losses= 2.998949
Elbow/Bend:
Smooth Flanged, r/D=1.5, 45 deg., K= 0.23, Quantity= 3
Area Change:
Expansion to Pipe Area, K= 2.32, Quantity= 1

Pipe 40 Detailed Input Data
Name: Outlet Hose
Geometry: Cylindrical Pipe
Material: Steel - ANSI 1 inch STD (schedule 40)
Inner Diameter= 1.049 inches
Length= 2 feet
Absolute Roughness= 0.0018 inches
Fittings & Losses= 0.957768
Elbow/Bend:
Smooth Flanged, r/D=1.5, 90 deg., K= 0.32, Quantity= 3

Pipe 41 Detailed Input Data
Name: Pipe
Geometry: Cylindrical Pipe
Material: Steel - ANSI 1/2 inch STD (schedule 40)
Inner Diameter= 0.622 inches
Length= 1.5 feet
Absolute Roughness= 0.0018 inches
Fittings & Losses= 0.1331069
Area Change:
Contraction to Pipe Area, K= 0.13, Quantity= 1

Pipe 42 Detailed Input Data
Name: Pipe
Geometry: Cylindrical Pipe
Material: Steel - ANSI 1/2 inch STD (schedule 40)
Inner Diameter= 0.622 inches
Length= 0.5 feet
Absolute Roughness= 0.0018 inches
Fittings & Losses= 0

Pipe 43 Detailed Input Data
Name: Pipe
Geometry: Cylindrical Pipe
Material: Steel - ANSI 1/2 inch STD (schedule 40)
Inner Diameter= 0.622 inches
Length= 1 feet
Absolute Roughness= 0.0018 inches
Fittings & Losses= 0.12
Other:
Tee, Through flow (dead branch), K= 0.04, Quantity= 3

Pipe 44 Detailed Input Data
Name: Pipe
Geometry: Cylindrical Pipe
Material: Steel - ANSI 1/2 inch STD (schedule 40)

CALCULATION SHEET

Project No. 079701.18.01	Calculation No. 079701.18.01-M-001	Rev. 0	Page No. 68 of 115
Title: Tank Side Cesium Removal Process System Flow Analysis			
Prepared By: JF Gallegos	Date: 7/22/19	Checked By: KW Dixon	Date: 7/22/19

AFT Fathom 9 (Model) 7/18/2019 Page 18	AFT Fathom Model	

Inner Diameter= 0.622 inches
Length= 0.5 feet
Absolute Roughness= 0.0018 inches
Fittings & Losses= 1.1
Other:
Tee, Branch flow (dead run), K= 1.10, Quantity= 1

Pipe 45 Detailed Input Data
Name: Pipe
Geometry: Cylindrical Pipe
Material: Steel - ANSI 1/2 inch STD (schedule 40)
Inner Diameter= 0.622 inches
Length= 4 feet
Absolute Roughness= 0.0018 inches
Fittings & Losses= 0.444336
Elbow/Bend:
Smooth Flanged, r/D=1.5, 90 deg., K= 0.36, Quantity= 1
Other:
Tee, Through flow (dead branch), K= 0.04, Quantity= 2

Pipe 46 Detailed Input Data
Name: Pipe
Geometry: Cylindrical Pipe
Material: Steel - ANSI 1/2 inch STD (schedule 40)
Inner Diameter= 0.622 inches
Length= 1 feet
Absolute Roughness= 0.0018 inches
Fittings & Losses= 1.1
Other:
Tee, Branch flow (dead run), K= 1.10, Quantity= 1

Pipe 47 Detailed Input Data
Name: Pipe
Geometry: Cylindrical Pipe
Material: Steel - ANSI 1/2 inch STD (schedule 40)
Inner Diameter= 0.622 inches
Length= 4 feet
Absolute Roughness= 0.0018 inches
Fittings & Losses= 0.768672
Elbow/Bend:
Smooth Flanged, r/D=1.5, 90 deg., K= 0.36, Quantity= 2
Other:
Tee, Through flow (dead branch), K= 0.04, Quantity= 1

Pipe 48 Detailed Input Data
Name: Pipe
Geometry: Cylindrical Pipe
Material: Steel - ANSI 1/2 inch STD (schedule 40)
Inner Diameter= 0.622 inches
Length= 8 feet
Absolute Roughness= 0.0018 inches
Fittings & Losses= 1.093008
Elbow/Bend:
Smooth Flanged, r/D=1.5, 90 deg., K= 0.36, Quantity= 3

Pipe 49 Detailed Input Data
Name: Pipe

CALCULATION SHEET

Project No. 079701.18.01	Calculation No. 079701.18.01-M-001	Rev. 0	Page No. 69 of 115
Title: Tank Side Cesium Removal Process System Flow Analysis			
Prepared By: JF Gallegos	Date: 7/22/19	Checked By: KW Dixon	Date: 7/22/19

AFT Fathom 9 (Model) 7/18/2019 Page 19	AFT Fathom Model	

Geometry: Cylindrical Pipe
Material: Steel - ANSI 1/2 inch STD (schedule 40)
Inner Diameter= 0.622 inches
Length= 5 feet
Absolute Roughness= 0.0018 inches
Fittings & Losses= 0.768672
Elbow/Bend:
Smooth Flanged, r/D=1.5, 90 deg., K= 0.36, Quantity= 2
Other:
Tee, Through flow (dead branch), K= 0.04, Quantity= 1

Pipe 50 Detailed Input Data
Name: Pipe
Geometry: Cylindrical Pipe
Material: Steel - ANSI 1/2 inch STD (schedule 40)
Inner Diameter= 0.622 inches
Length= 6 feet
Absolute Roughness= 0.0018 inches
Fittings & Losses= 1.173008
Elbow/Bend:
Smooth Flanged, r/D=1.5, 90 deg., K= 0.36, Quantity= 3
Other:
Tee, Through flow (dead branch), K= 0.04, Quantity= 2

Pipe 51 Detailed Input Data
Name: Pipe
Geometry: Cylindrical Pipe
Material: Steel - ANSI 1/2 inch STD (schedule 40)
Inner Diameter= 0.622 inches
Length= 1 feet
Absolute Roughness= 0.0018 inches
Fittings & Losses= 0

Pipe 52 Detailed Input Data
Name: Pipe
Geometry: Cylindrical Pipe
Material: Steel - ANSI 1/2 inch STD (schedule 40)
Inner Diameter= 0.622 inches
Length= 32 feet
Absolute Roughness= 0.0018 inches
Fittings & Losses= 1.86168
Elbow/Bend:
Smooth Flanged, r/D=1.5, 90 deg., K= 0.36, Quantity= 5
Other:
Tee, Through flow (dead branch), K= 0.04, Quantity= 1

Pipe 53 Detailed Input Data
Name: Pipe
Geometry: Cylindrical Pipe
Material: Steel - ANSI 1/2 inch STD (schedule 40)
Inner Diameter= 0.622 inches
Length= 2 feet
Absolute Roughness= 0.0018 inches
Fittings & Losses= 0

Pipe 54 Detailed Input Data
Name: Treated Effluent HIHTL (From TSCR)

CALCULATION SHEET

Project No. 079701.18.01	Calculation No. 079701.18.01-M-001	Rev. 0	Page No. 70 of 115
Title: Tank Side Cesium Removal Process System Flow Analysis			
Prepared By: JF Gallegos	Date: 7/22/19	Checked By: KW Dixon	Date: 7/22/19

AFT Fathom 9 (Model) 7/18/2019 Page 20	AFT Fathom Model	

Geometry: Cylindrical Pipe
Material: Unspecified
Inner Diameter= 2 inches
Length= 211 feet
Absolute Roughness= 0.00126 inches
Fittings & Losses= 1.615
Elbow/Bend:
Smooth Flanged, r/D=6, 90 deg., K= 0.32, Quantity= 5

Pipe 55 Detailed Input Data
Name: Pipe
Geometry: Cylindrical Pipe
Material: Steel - ANSI 1/2 inch STD (schedule 40)
Inner Diameter= 0.622 inches
Length= 1 feet
Absolute Roughness= 0.0018 inches
Fittings & Losses= 0.404336
Elbow/Bend:
Smooth Flanged, r/D=1.5, 90 deg., K= 0.36, Quantity= 1
Other:
Tee, Through flow (dead branch), K= 0.04, Quantity= 1

Pipe 56 Detailed Input Data
Name: Pipe
Geometry: Cylindrical Pipe
Material: Steel - ANSI 1/2 inch STD (schedule 40)
Inner Diameter= 0.622 inches
Length= 1.5 feet
Absolute Roughness= 0.0018 inches
Fittings & Losses= 1.1
Other:
Tee, Branch flow (dead run), K= 1.10, Quantity= 1

Pipe 57 Detailed Input Data
Name: Pipe
Geometry: Cylindrical Pipe
Material: Steel - ANSI 2 inch STD (schedule 40)
Inner Diameter= 2.067 inches
Length= 3 feet
Absolute Roughness= 0.0018 inches
Fittings & Losses= 1.47732
Elbow/Bend:
Smooth Flanged, r/D=6, 90 deg., K= 0.32, Quantity= 1
Valve:
Ball, PO=100, K= 0.06, Quantity= 1
Other:
Tee, Branch flow (dead run), K= 1.10, Quantity= 1

Pipe 58 Detailed Input Data
Name: Pipe
Geometry: Cylindrical Pipe
Material: Steel - ANSI 1 inch STD (schedule 40)
Inner Diameter= 1.049 inches
Length= 3 feet
Absolute Roughness= 0.0018 inches
Fittings & Losses= 0.427668
Elbow/Bend:

CALCULATION SHEET

Project No. 079701.18.01	Calculation No. 079701.18.01-M-001	Rev. 0	Page No. 71 of 115
Title: Tank Side Cesium Removal Process System Flow Analysis			
Prepared By: JF Gallegos	Date: 7/22/19	Checked By: KW Dixon	Date: 7/22/19

AFT Fathom 9 (Model) 7/18/2019 Page 21	AFT Fathom Model	

Smooth Flanged, r/D=1.5, 90 deg., K= 0.32, Quantity= 1
Valve:
Ball, PO=100, K= 0.07, Quantity= 1
Other:
Tee, Through flow (dead branch), K= 0.04, Quantity= 1

Pipe 59 Detailed Input Data
Name: Pipe
Geometry: Cylindrical Pipe
Material: Steel - ANSI 1/2 inch STD (schedule 40)
Inner Diameter= 0.622 inches
Length= 2.5 feet
Absolute Roughness= 0.0018 inches
Fittings & Losses= 2.564336
Elbow/Bend:
Smooth Flanged, r/D=1.5, 90 deg., K= 0.36, Quantity= 1
Other:
Tee, Branch flow (dead run), K= 1.10, Quantity= 2

Pipe 60 Detailed Input Data
Name: Pipe
Geometry: Cylindrical Pipe
Material: Steel - ANSI 1/2 inch STD (schedule 40)
Inner Diameter= 0.622 inches
Length= 0.5 feet
Absolute Roughness= 0.0018 inches
Fittings & Losses= 0

Pipe 61 Detailed Input Data
Name: Pipe
Geometry: Cylindrical Pipe
Material: Steel - ANSI 1/2 inch STD (schedule 40)
Inner Diameter= 0.622 inches
Length= 12 feet
Absolute Roughness= 0.0018 inches
Fittings & Losses= 2.92168
Elbow/Bend:
Smooth Flanged, r/D=1.5, 90 deg., K= 0.36, Quantity= 5
Other:
Tee, Branch flow (dead run), K= 1.10, Quantity= 1

Pipe 62 Detailed Input Data
Name: Pipe
Geometry: Cylindrical Pipe
Material: Steel - ANSI 1/2 inch STD (schedule 40)
Inner Diameter= 0.622 inches
Length= 11.5 feet
Absolute Roughness= 0.0018 inches
Fittings & Losses= 1.464336
Elbow/Bend:
Smooth Flanged, r/D=1.5, 90 deg., K= 0.36, Quantity= 1
Other:
Tee, Branch flow (dead run), K= 1.10, Quantity= 1

Pipe 63 Detailed Input Data
Name: Pipe
Geometry: Cylindrical Pipe

CALCULATION SHEET

Project No. 079701.18.01	Calculation No. 079701.18.01-M-001	Rev. 0	Page No. 72 of 115
Title: Tank Side Cesium Removal Process System Flow Analysis			
Prepared By: JF Gallegos	Date: 7/22/19	Checked By: KW Dixon	Date: 7/22/19

AFT Fathom 9 (Model) 7/18/2019 Page 22	AFT Fathom Model	

Material: Steel - ANSI 1/2 inch STD (schedule 40)
Inner Diameter= 0.622 inches
Length= 0.5 feet
Absolute Roughness= 0.0018 inches
Fittings & Losses= 0.08
Other:
Tee, Through flow (dead branch), K= 0.04, Quantity= 2

Pipe 64 Detailed Input Data
Name: Pipe
Geometry: Cylindrical Pipe
Material: Steel - ANSI 1/2 inch STD (schedule 40)
Inner Diameter= 0.622 inches
Length= 2 feet
Absolute Roughness= 0.0018 inches
Fittings & Losses= 0.04
Other:
Tee, Through flow (dead branch), K= 0.04, Quantity= 1

Pipe 65 Detailed Input Data
Name: Pipe
Geometry: Cylindrical Pipe
Material: Steel - ANSI 1/2 inch STD (schedule 40)
Inner Diameter= 0.622 inches
Length= 1 feet
Absolute Roughness= 0.0018 inches
Fittings & Losses= 1.14
Other:
Tee, Through flow (dead branch), K= 0.04, Quantity= 1
Tee, Branch flow (dead run), K= 1.10, Quantity= 1

Pipe 66 Detailed Input Data
Name: Pipe
Geometry: Cylindrical Pipe
Material: Steel - ANSI 1/2 inch STD (schedule 40)
Inner Diameter= 0.622 inches
Length= 9.5 feet
Absolute Roughness= 0.0018 inches
Fittings & Losses= 2.557344
Elbow/Bend:
Smooth Flanged, r/D=1.5, 90 deg., K= 0.36, Quantity= 4
Other:
Tee, Branch flow (dead run), K= 1.10, Quantity= 1

Pipe 67 Detailed Input Data
Name: Pipe
Geometry: Cylindrical Pipe
Material: Steel - ANSI 1/2 inch STD (schedule 40)
Inner Diameter= 0.622 inches
Length= 0.5 feet
Absolute Roughness= 0.0018 inches
Fittings & Losses= 0.04
Other:
Tee, Through flow (dead branch), K= 0.04, Quantity= 1

Pipe 68 Detailed Input Data
Name: Pipe

CALCULATION SHEET

Project No. 079701.18.01	Calculation No. 079701.18.01-M-001	Rev. 0	Page No. 73 of 115
Title: Tank Side Cesium Removal Process System Flow Analysis			
Prepared By: JF Gallegos	Date: 7/22/19	Checked By: KW Dixon	Date: 7/22/19

AFT Fathom 9 (Model) 7/18/2019 Page 23	AFT Fathom Model	

Geometry: Cylindrical Pipe
Material: Steel - ANSI 1/2 inch STD (schedule 40)
Inner Diameter= 0.622 inches
Length= 2.5 feet
Absolute Roughness= 0.0018 inches
Fittings & Losses= 0.04
Other:
Tee, Through flow (dead branch), K= 0.04, Quantity= 1

Pipe 70 Detailed Input Data
Name: Pipe
Geometry: Cylindrical Pipe
Material: Steel - ANSI 1/2 inch STD (schedule 40)
Inner Diameter= 0.622 inches
Length= 2 feet
Absolute Roughness= 0.0018 inches
Fittings & Losses= 0.04
Other:
Tee, Through flow (dead branch), K= 0.04, Quantity= 1

Pipe 71 Detailed Input Data
Name: Pipe
Geometry: Cylindrical Pipe
Material: Steel - ANSI 1/2 inch STD (schedule 40)
Inner Diameter= 0.622 inches
Length= 0.5 feet
Absolute Roughness= 0.0018 inches
Fittings & Losses= 0.04
Other:
Tee, Through flow (dead branch), K= 0.04, Quantity= 1

Pipe 72 Detailed Input Data
Name: Pipe
Geometry: Cylindrical Pipe
Material: Steel - ANSI 1/2 inch STD (schedule 40)
Inner Diameter= 0.622 inches
Length= 0.5 feet
Absolute Roughness= 0.0018 inches
Fittings & Losses= 1.464336
Elbow/Bend:
Smooth Flanged, r/D=1.5, 90 deg., K= 0.36, Quantity= 1
Other:
Tee, Branch flow (dead run), K= 1.10, Quantity= 1

Pipe 89 Detailed Input Data
Name: Pipe
Geometry: Cylindrical Pipe
Material: Steel - ANSI 1/2 inch STD (schedule 40)
Inner Diameter= 0.622 inches
Length= 0.5 feet
Absolute Roughness= 0.0018 inches
Fittings & Losses= 1.1
Other:
Tee, Branch flow (dead run), K= 1.10, Quantity= 1

Pipe 91 Detailed Input Data
Name: Pipe

CALCULATION SHEET

Project No. 079701.18.01	Calculation No. 079701.18.01-M-001	Rev. 0	Page No. 74 of 115
Title: Tank Side Cesium Removal Process System Flow Analysis			
Prepared By: JF Gallegos	Date: 7/22/19	Checked By: KW Dixon	Date: 7/22/19

AFT Fathom 9 (Model) 7/18/2019 Page 24	AFT Fathom Model	

Geometry: Cylindrical Pipe
Material: Steel - ANSI 1/2 inch STD (schedule 40)
Inner Diameter= 0.622 inches
Length= 0.5 feet
Absolute Roughness= 0.0018 inches
Fittings & Losses= 1.1
Other:
Tee, Branch flow (dead run), K= 1.10, Quantity= 1

Area Change Table

Area Change	Name	Object Defined	Inlet Elevation	Elevation Units	Initial Pressure	Initial Pressure Units	Database Source	Type	Geometry
7		Yes	681	feet	951.7	feet		Conical	Contraction
9	Area Change	Yes	681	feet	899.0	feet		Conical	Expansion
54	Area Change	Yes	681	feet				Conical	Expansion

Area Change	Angle	Loss Factor
7	30.	0.173546
9	30.	0.08336683
54	45.	0.8118146

Assigned Pressure Table

Assigned Pressure	Name	Object Defined	Inlet Elevation	Elevation Units	Initial Pressure	Initial Pressure Units	Database Source	Pressure
12	AP-07F	Yes	677	feet	1.000	atm		1
55	AP-106 Riser 2	Yes	680	feet	1.000	atm		1

Assigned Pressure	Pressure Units	Pressure Type	Balance Energy	Balance Concentration	(Pipe #1) K In, K Out	(Pipe #2) K In, K Out	(Pipe #3) K In, K Out	(Pipe #4) K In, K Out
12	atm	Stagnation	No	No	(P11) 0, 1			
55	atm	Stagnation	No	No	(P54) 0, 1			

Assigned Pressure	(Pipe #5) K In, K Out	(Pipe #6) K In, K Out	(Pipe #7) K In, K Out	(Pipe #8) K In, K Out	(Pipe #9) K In, K Out	(Pipe #10) K In, K Out	(Pipe #11) K In, K Out	(Pipe #12) K In, K Out
12								
55								

Assigned Pressure	(Pipe #13) K In, K Out	(Pipe #14) K In, K Out	(Pipe #15) K In, K Out	(Pipe #16) K In, K Out	(Pipe #17) K In, K Out	(Pipe #18) K In, K Out	(Pipe #19) K In, K Out	(Pipe #20) K In, K Out
12								
55								

Assigned Pressure	(Pipe #21) K In, K Out	(Pipe #22) K In, K Out	(Pipe #23) K In, K Out	(Pipe #24) K In, K Out	(Pipe #25) K In, K Out
12					
55					

CALCULATION SHEET

Project No. 079701.18.01	Calculation No. 079701.18.01-M-001	Rev. 0	Page No. 75 of 115
Title: Tank Side Cesium Removal Process System Flow Analysis			
Prepared By: JF Gallegos	Date: 7/22/19	Checked By: KW Dixon	Date: 7/22/19

AFT Fathom 9 (Model) 7/18/2019 Page 25	AFT Fathom Model	

Branch Table

Branch	Name	Object Defined	Inlet Elevation	Elevation Units	Initial Pressure	Initial Pressure Units	Database Source	Special Condition
4	Pump Discharge Nozzle	Yes	675.2	feet				N/A
5	Branch	Yes	675.2	feet				N/A
6	Branch	Yes	677.2	feet				N/A
8	Branch	Yes	681	feet				N/A
10	Branch	Yes	677.2	feet				N/A
13	Branch	Yes	681	feet				N/A
15	Branch	Yes	681	feet				N/A
17	Branch	Yes	681	feet				N/A
19	Branch	Yes	681	feet				N/A
20	Branch	Yes	687	feet				N/A
22	Branch	Yes	687	feet				N/A
23	Branch	Yes	687	feet				N/A
25	Branch	Yes	687	feet				N/A
26	Branch	Yes	687	feet				N/A
28	Branch	Yes	687	feet				N/A
29	Branch	Yes	687	feet				N/A
31	Branch	Yes	687	feet				N/A
33	Branch	Yes	687	feet				N/A
35	Branch	Yes	687	feet				N/A
36	Branch	Yes	687	feet				N/A
38	Branch	Yes	687	feet				N/A
39	Branch	Yes	687	feet				N/A
41	Branch	Yes	687	feet				N/A
43	Branch	Yes	687	feet				N/A
45	Branch	Yes	687	feet				N/A
57	Branch	Yes	681	feet				N/A
59	Branch	Yes	681	feet				N/A

CALCULATION SHEET

Project No. 079701.18.01	Calculation No. 079701.18.01-M-001	Rev. 0	Page No. 76 of 115
Title: Tank Side Cesium Removal Process System Flow Analysis			
Prepared By: JF Gallegos	Date: 7/22/19	Checked By: KW Dixon	Date: 7/22/19

AFT Fathom 9 (Model) 7/18/2019 Page 26	AFT Fathom Model	

Branch	Boundary Flow (+ = in/- = out)	Boundary Flow Units	(Pipe #1) K In, K Out	(Pipe #2) K In, K Out	(Pipe #3) K In, K Out	(Pipe #4) K In, K Out	(Pipe #5) K In, K Out	(Pipe #6) K In, K Out
4			(P1) 0, 0	(P4) 0, 0				
5			(P4) 0, 0	(P5) 0, 0				
6			(P5) 0, 0	(P6) 0, 0				
8			(P7) 0, 0	(P8) 0, 0	(P12) 0, 0			
10			(P9) 0, 0	(P10) 0, 0				
13			(P13) 0, 0	(P14) 0, 0	(P55) 0, 0			
15			(P15) 0, 0	(P16) 0, 0				
17			(P17) 0, 0	(P18) 0, 0				
19			(P19) 0, 0	(P20) 0, 0	(P60) 0, 0			
20			(P20) 0, 0	(P21) 0, 0	(P61) 0, 0	(P63) 0, 0		
22			(P22) 0, 0	(P23) 0, 0	(P62) 0, 0			
23			(P23) 0, 0	(P24) 0, 0				
25			(P25) 0, 0	(P26) 0, 0				
26			(P26) 0, 0	(P27) 0, 0	(P65) 0, 0			
28			(P28) 0, 0	(P29) 0, 0	(P64) 0, 0			
29			(P29) 0, 0	(P30) 0, 0	(P67) 0, 0			
31			(P31) 0, 0	(P32) 0, 0				
33			(P33) 0, 0	(P34) 0, 0				
35			(P35) 0, 0	(P68) 0, 0	(P89) 0, 0			
36			(P35) 0, 0	(P36) 0, 0	(P71) 0, 0			
38			(P37) 0, 0	(P38) 0, 0	(P91) 0, 0			
39			(P38) 0, 0	(P39) 0, 0				
41			(P40) 0, 0	(P41) 0, 0				
43			(P42) 0, 0	(P43) 0, 0	(P72) 0, 0			
45			(P44) 0, 0	(P45) 0, 0	(P66) 0, 0	(P70) 0, 0		
57			(P56) 0, 0	(P57) 0, 0				
59			(P58) 0, 0	(P59) 0, 0				

CALCULATION SHEET

Project No. 079701.18.01	Calculation No. 079701.18.01-M-001	Rev. 0	Page No. 77 of 115
Title: Tank Side Cesium Removal Process System Flow Analysis			
Prepared By: JF Gallegos	Date: 7/22/19	Checked By: KW Dixon	Date: 7/22/19

AFT Fathom 9 (Model) 7/18/2019 Page 27	AFT Fathom Model	

Branch	(Pipe #7) K In, K Out	(Pipe #8) K In, K Out	(Pipe #9) K In, K Out	(Pipe #10) K In, K Out	(Pipe #11) K In, K Out	(Pipe #12) K In, K Out	(Pipe #13) K In, K Out	(Pipe #14) K In, K Out	(Pipe #15) K In, K Out
4									
5									
6									
8									
10									
13									
15									
17									
19									
20									
22									
23									
25									
26									
28									
29									
31									
33									
35									
36									
38									
39									
41									
43									
45									
57									
59									

CALCULATION SHEET

Project No. 079701.18.01	Calculation No. 079701.18.01-M-001	Rev. 0	Page No. 78 of 115
Title: Tank Side Cesium Removal Process System Flow Analysis			
Prepared By: JF Gallegos	Date: 7/22/19	Checked By: KW Dixon	Date: 7/22/19

AFT Fathom 9 (Model)
7/18/2019
Page 28

AFT Fathom Model

Branch	(Pipe #16) K In, K Out	(Pipe #17) K In, K Out	(Pipe #18) K In, K Out	(Pipe #19) K In, K Out	(Pipe #20) K In, K Out	(Pipe #21) K In, K Out	(Pipe #22) K In, K Out	(Pipe #23) K In, K Out	(Pipe #24) K In, K Out	(Pipe #25) K In, K Out
4										
5										
6										
8										
10										
13										
15										
17										
19										
20										
22										
23										
25										
26										
28										
29										
31										
33										
35										
36										
38										
39										
41										
43										
45										
57										
59										

Control Valve Table

Control Valve	Name	Object Defined	Inlet Elevation	Elevation Units	Initial Pressure	Initial Pressure Units	Database Source	Special Condition	Valve Type
51	WP-PCV-557	Yes	687	feet				None	PSV
81	WP-FCV-306	Yes	681	feet				None	FCV

Control Valve	Control Setting	Control Units	Pressure/ Head Type	Inlet Failure Type	Outlet Failure Type	Full Open Loss Type	Full Open Loss
51	50	psig	Static	Close	Fully Open	None	N/A
81	5	gal/min	N/A	Fully Open	N/A	None	N/A

General Component Table

CALCULATION SHEET

Project No. 079701.18.01	Calculation No. 079701.18.01-M-001	Rev. 0	Page No. 79 of 115
Title: Tank Side Cesium Removal Process System Flow Analysis			
Prepared By: JF Gallegos	Date: 7/22/19	Checked By: KW Dixon	Date: 7/22/19

AFT Fathom 9 (Model)
7/18/2019
Page 29

AFT Fathom Model

General Component	Name	Object Defined	Inlet Elevation	Elevation Units	Initial Pressure	Initial Pressure Units
16	Pre-Filter (WP-FLT-325A)	Yes	681	feet		

General Component	Name	Object Defined	Inlet Elevation	Elevation Units	Initial Pressure	Initial Pressure Units
24	Ion-Exchange Column (WP-IX-400A)	Yes	687	feet		
32	Ion-Exchange Column (WP-IX-400B)	Yes	687	feet		
40	Ion-Exchange Column (WP-IX-400C)	Yes	687	feet		
47	Media Trap	Yes	687	feet		
49	Delay Tank	Yes	687	feet		
58	Pre-Filter (WP-FLT-325B)	Yes	681	feet		

General Component	Database Source	Special Condition	Loss Model	Loss Value	Independent Variable	Ind. Variable Units	Dependent Variable
16		None	Resistance Curve	Variable	Vol. Flow Rate	gal/min	Pressure Loss

General Component	Database Source	Special Condition	Loss Model	Loss Value	Independent Variable	Ind. Variable Units	Dependent Variable
24		None	Resistance Curve	Variable	Vol. Flow Rate	gal/min	Pressure Loss
32		None	Resistance Curve	Variable	Vol. Flow Rate	gal/min	Pressure Loss
40		None	Resistance Curve	Variable	Vol. Flow Rate	gal/min	Pressure Loss
47		None	Resistance Curve	Variable	Vol. Flow Rate	gal/min	Pressure Loss
49		None	K Constant	0			
58		None	Resistance Curve	Variable	Vol. Flow Rate	gal/min	Head Loss

General Component	Dep. Variable Units	Loss Constant a	Loss Constant b	Loss Constant c	Loss Constant d	Loss Constant e
16	psid	4.440892E-16	-0.8	0.28	0	0

General Component	Dep. Variable Units	Loss Constant a	Loss Constant b	Loss Constant c	Loss Constant d	Loss Constant e
24	psid	-2.664535E-15	4.440892E-15	0.6	0	0
32	psid	-1.332268E-15	1.2	0.36	0	0
40	psid	-1.776357E-15	-0.8	0.48	0	0
47	psid	2.88658E-15	-2.220446E-15	0.2	0	0
49						
58	feet	4.440892E-16	-0.8	0.28	0	0

Orifice Table

Orifice	Name	Object Defined	Inlet Elevation	Elevation Units	Initial Pressure	Initial Pressure Units	Database Source	Orifice Type	Flow Area Type
11	Orifice	Yes	677	feet				Sharp-Edged	Diameter
52	Orifice	Yes	687	feet				Sharp-Edged	Diameter

Orifice	Dimension	Dimension Units	R/D	Restricted Area	Restricted Area Units	Loss Model	Loss Value	Independent Variable	Ind. Variable Units	Dependent Variable
11	0.531	inches				K Constant	529.3999			
52	0.26563	inches				K Constant	65.24963			

CALCULATION SHEET

Project No. 079701.18.01	Calculation No. 079701.18.01-M-001	Rev. 0	Page No. 80 of 115
Title: Tank Side Cesium Removal Process System Flow Analysis			
Prepared By: JF Gallegos	Date: 7/22/19	Checked By: KW Dixon	Date: 7/22/19

AFT Fathom 9 (Model)
7/18/2019
Page 30

AFT Fathom Model

Orifice	Dep. Variable Units	Loss Constant a	Loss Constant b	Loss Constant c	Loss Constant d	Loss Constant e
11						
52						

Pump Table

Pump	Name	Object Defined	Inlet Elevation	Elevation Units	Initial Pressure	Initial Pressure Units	Database Source	Special Condition	Pump Type
1	Pump AP-07F	Yes	625.9	feet	625.5	feet		None	Pump Curve

Pump	Design Flow Rate	Design Flow Rate Units	Current Configuration	Independent Variable	Ind. Variable Units	Dependent Variable	Dep. Variable Units	Pump Curve Constant a
1				Vol. Flow Rate	gal/min	Head Rise	feet	426.922

Pump	Pump Curve Constant b	Pump Curve Constant c	Pump Curve Constant d	Pump Curve Constant e	Runout Flow Rate	Runout Flow Rate Units	Speed	Control When Exceeded Only
1	-0.3101783	-0.002943075	0	0			100	

Pump	Heat Added To Fluid	Heat Added Units
1	0	Percent

Valve Table

Valve	Name	Object Defined	Inlet Elevation	Elevation Units	Initial Pressure	Initial Pressure Units	Database Source	Special Condition	Exit Valve
14	Valve	Yes	681	feet				None	No
18	Valve	Yes	681	feet				None	No
21	Valve	Yes	687	feet				Closed	No
27	Valve	Yes	687	feet				None	No
30	Valve	Yes	687	feet				None	No
34	Valve	Yes	687	feet				None	No
37	Valve	Yes	687	feet				Closed	No
42	WP-AOV-408C Fail Close	Yes	687	feet				None	No
44	Valve	Yes	687	feet				Closed	No
46	Valve	Yes	687	feet				None	No
48	Valve	Yes	687	feet				None	No
50	Valve	Yes	687	feet				None	No
53	WP-AOV-560 Fail Close	Yes	681	feet				None	No
56	Valve	Yes	681	feet				Closed	No
60	Valve	Yes	681	feet				None	No
61	Valve	Yes	687	feet				Closed	No
62	Valve	Yes	687	feet				Closed	No
63	Valve	Yes	687	feet				Closed	No
64	Valve	Yes	687	feet				None	No

CALCULATION SHEET

Project No. 079701.18.01	Calculation No. 079701.18.01-M-001	Rev. 0	Page No. 81 of 115
Title: Tank Side Cesium Removal Process System Flow Analysis			
Prepared By: JF Gallegos	Date: 7/22/19	Checked By: KW Dixon	Date: 7/22/19

AFT Fathom 9 (Model)
7/18/2019
Page 31

AFT Fathom Model

Valve	Name	Object Defined	Inlet Elevation	Elevation Units	Initial Pressure	Initial Pressure Units	Database Source	Special Condition	Exit Valve
65	Valve	Yes	687	feet				None	No
66	Valve	Yes	687	feet				None	No

Valve	Exit Pressure	Exit Pressure Units	Restricted Area	Restricted Area Units	Loss Model	Loss Source	Loss Factor	Percent Open	Open Pct. Data Exists
14					K Constant	N/A	0.078072		No
18					K Constant	N/A	0.078072		No
21					Cv	Cv From Table	32	100	Yes
27					Cv	Cv From Table	32	100	Yes
30					Cv	Cv From Table	32	100	Yes
34					Cv	Cv From Table	32	100	Yes
37					Cv	Cv From Table	32	100	Yes
42					Cv	Cv From Table	32	100	Yes
44					Cv	Cv From Table	32	100	Yes
46					Cv	Cv From Table	32	100	Yes
48					K Constant	N/A	0.078072		No
50					K Constant	N/A	0.078072		No
53					Cv	Cv From Table	32	100	Yes
56					K Constant	N/A	0.078072		No
60					K Constant	N/A	0.078072		No
61					Cv	Cv From Table	32	100	Yes
62					Cv	Cv From Table	32	100	Yes
63					Cv	Cv From Table	32	100	Yes
64					Cv	Cv From Table	32	100	Yes

Valve	Exit Pressure	Exit Pressure Units	Restricted Area	Restricted Area Units	Loss Model	Loss Source	Loss Factor	Percent Open	Open Pct. Data Exists
65					Cv	Cv From Table	32	100	Yes
66					Cv	Cv From Table	32	100	Yes

CALCULATION SHEET

Project No. 079701.18.01	Calculation No. 079701.18.01-M-001	Rev. 0	Page No. 82 of 115
Title: Tank Side Cesium Removal Process System Flow Analysis			
Prepared By: JF Gallegos	Date: 7/22/19	Checked By: KW Dixon	Date: 7/22/19

AFT Fathom 9 (Model) 7/18/2019 Page 32	AFT Fathom Model	

Valve	Independent Variable	Ind. Variable Units	Dependent Variable	Dep. Variable Units	Loss Constant a	Loss Constant b	Loss Constant c	Loss Constant d	Loss Constant e
14									
18									
21									
27									
30									
34									
37									
42									
44									
46									
48									
50									
53									
56									
60									
61									
62									
63									
64									

Valve	Independent Variable	Ind. Variable Units	Dependent Variable	Dep. Variable Units	Loss Constant a	Loss Constant b	Loss Constant c	Loss Constant d	Loss Constant e
65									
66									

CALCULATION SHEET

Project No. 079701.18.01	Calculation No. 079701.18.01-M-001	Rev. 0	Page No. 83 of 115
Title: Tank Side Cesium Removal Process System Flow Analysis			
Prepared By: JF Gallegos	Date: 7/22/19	Checked By: KW Dixon	Date: 7/22/19

APPENDIX E

FATHOM MODEL OUTPUTS FOR LOW HEAD LOSS

CALCULATION SHEET

Project No. 079701.18.01	Calculation No. 079701.18.01-M-001	Rev. 0	Page No. 84 of 115
Title: Tank Side Cesium Removal Process System Flow Analysis			
Prepared By: JF Gallegos	Date: 7/22/19	Checked By: KW Dixon	Date: 7/22/19

AFT Fathom 9 (Output) 7/18/2019 Page 1	AFT Fathom Model	

Model Reference Information

General

Title: AFT Fathom Model
Analysis run on: 7/18/2019 8:40:31 AM
Application version: AFT Fathom Version 9 (2016.01.20)
Input File: P:\Clients\Atkins Energy Federal EPC, Inc\078906.18.01 - Design of TSCR Upgrades\Calculations\Mechanical\M-002 \Rev 0\Fathom V&V\TSCR Pump Sizing.fth
Scenario: Base Scenario/Clean
Output File: P:\Clients\Atkins Energy Federal EPC, Inc\078906.18.01 - Design of TSCR Upgrades\Calculations\Mechanical\M-002 \Rev 0\Fathom V&V\TSCR Pump Sizing_1.out

Execution Time= 0.80 seconds
Total Number Of Head/Pressure Iterations= 345
Total Number Of Flow Iterations= 29
Total Number Of Temperature Iterations= 0
Number Of Pipes= 71
Number Of Junctions= 65
Matrix Method= Gaussian Elimination

Pressure/Head Tolerance= 0.0001 relative change
Flow Rate Tolerance= 0.0001 relative change
Temperature Tolerance= 0.0001 relative change
Flow Relaxation= (Automatic)
Pressure Relaxation= (Automatic)

Constant Fluid Property Model
Fluid Database: User Specified
Fluid= User Specified
Density= 1.28 kg/liter
Viscosity= 2 centipoise
Vapor Pressure= 7.52 psia
Viscosity Model= Newtonian
Apply laminar and non-Newtonian correction to: Pipe Fittings & Losses, Junction K factors, Junction Special Losses, Junction Polynomials
Corrections applied to the following junctions: Branch, Reservoir, Assigned Flow, Assigned Pressure, Area Change, Tee or Wye, Spray Discharge, Relief Valve

Ambient Pressure (constant)= 1 atm
Gravitational Acceleration= 1 g
Turbulent Flow Above Reynolds Number= 4000
Laminar Flow Below Reynolds Number= 2300
Total Inflow= 64.99 gal/min
Total Outflow= 64.99 gal/min
Maximum Static Pressure is 226.3 psia at Pipe 3 Inlet
Minimum Static Pressure is 14.21 psia at Pipe 53 Outlet

Warnings

No Warnings

Pump Summary

CALCULATION SHEET

Project No. 079701.18.01	Calculation No. 079701.18.01-M-001	Rev. 0	Page No. 85 of 115
Title: Tank Side Cesium Removal Process System Flow Analysis			
Prepared By: JF Gallegos	Date: 7/22/19	Checked By: KW Dixon	Date: 7/22/19

AFT Fathom 9 (Output)
7/18/2019
Page 2

AFT Fathom Model

Jct	Results Diagram	Name	Vol. Flow (gal/min)	Mass Flow (lbm/sec)	dP (psid)	dH (feet)	Overall Efficiency (Percent)	Speed (Percent)	Overall Power (hp)	BEP (gal/min)	% of BEP (Percent)
1	Show ...	Pump AP-07F	64.99	11.57	218.8	394.3	N/A	100.0	8.294	N/A	N/A

Jct	NPSHA (feet)	NPSHR (feet)
1	49.23	N/A

Valve Summary

Jct	Name	Valve Type	Vol. Flow (gal/min)	Mass Flow (lbm/sec)	dP Stag. (psid)	dH (feet)	P Static In (psig)	Cv	K
14	Valve	REGULAR	5.000	0.8902	0.01876	0.03382	82.6291	41.3130	0.07807
18	Valve	REGULAR	5.000	0.8902	0.01876	0.03382	80.1730	41.3130	0.07807
21	Valve	REGULAR	5.000	0.8902	0.03128	0.05636	74.7387	32.0000	0.13013
27	Valve	REGULAR	5.000	0.8902	0.03128	0.05636	65.6850	32.0000	0.13013
30	Valve	REGULAR	5.000	0.8902	0.03128	0.05636	64.6766	32.0000	0.13013
34	Valve	REGULAR	5.000	0.8902	0.03128	0.05636	57.6324	32.0000	0.13013
X37	Valve	REGULAR	0.000	0.0000	N/A	N/A	57.2035	N/A	N/A
42	WP-AOV-408C Fail Close	REGULAR	0.000	0.0000	N/A	N/A	56.7793	N/A	N/A
44	Valve	REGULAR	0.000	0.0000	N/A	N/A	56.7793	N/A	N/A
46	Valve	REGULAR	5.000	0.8902	0.03128	0.05636	55.8343	32.0000	0.13013
48	Valve	REGULAR	5.000	0.8902	0.01876	0.03382	53.6066	41.3130	0.07807
50	Valve	REGULAR	5.000	0.8902	0.01876	0.03382	51.1974	41.3130	0.07807
53	WP-AOV-560 Fail Close	REGULAR	5.000	0.8902	0.03128	0.05636	-0.1559	32.0000	0.13013
X56	Valve	REGULAR	0.000	0.0000	N/A	N/A	83.2086	N/A	N/A
60	Valve	REGULAR	0.000	0.0000	N/A	N/A	80.3199	N/A	N/A
X61	Valve	REGULAR	0.000	0.0000	N/A	N/A	75.5826	N/A	N/A
X62	Valve	REGULAR	0.000	0.0000	N/A	N/A	66.0097	N/A	N/A
X63	Valve	REGULAR	0.000	0.0000	N/A	N/A	65.2560	N/A	N/A
X64	Valve	REGULAR	0.000	0.0000	N/A	N/A	75.5826	N/A	N/A
65	Valve	REGULAR	5.000	0.8902	0.03128	0.05636	56.8788	32.0000	0.13013
X66	Valve	REGULAR	0.000	0.0000	N/A	N/A	56.7793	N/A	N/A
51	WP-PCV-557	PSV	5.000	0.8902	32.42294	58.42864	50.0000	0.9939	134.89730
81	WP-FCV-306	FCV	5.000	0.8902	103.63836	186.76430	187.3428	0.5559	431.19270

CALCULATION SHEET

Project No. 079701.18.01	Calculation No. 079701.18.01-M-001	Rev. 0	Page No. 86 of 115
Title: Tank Side Cesium Removal Process System Flow Analysis			
Prepared By: JF Gallegos	Date: 7/22/19	Checked By: KW Dixon	Date: 7/22/19

AFT Fathom 9 (Output) 7/18/2019 Page 3	AFT Fathom Model	

Jct	Valve State	Open Percentage (Percent)
14	Open	N/A
18	Open	N/A
21	Open	100.00
27	Open	100.00
30	Open	100.00
34	Open	100.00
X37	Closed By User	N/A
42	Open	N/A
44	Open	N/A
46	Open	100.00
48	Open	N/A
50	Open	N/A
53	Open	100.00
X56	Closed By User	N/A
60	Open	N/A
X61	Closed By User	N/A
X62	Closed By User	N/A
X63	Closed By User	N/A
X64	Closed By User	N/A
65	Open	100.00
X66	Closed By User	N/A
51	Open	50.22
81	Open	35.04

Pipe Output Table

Pipe	Name	Vol. Flow Rate (gal/min)	Velocity (feet/sec)	P Static Max (psig)	P Static Min (psig)	Elevation Inlet (feet)	Elevation Outlet (feet)	dP Stag. Total (psid)
3	Pump Piping	64.986	0.7217	211.6043	211.5984	675.2	675.2	0.005888
4	Jumper AP07F-WT-J-[P1-P2-(A)]	64.986	6.2134	211.2699	210.3075	675.2	675.2	0.962394
5	Jumper AP-07F-WT-EPDMJ-[A-B]	64.986	6.6367	210.2606	207.9955	675.2	677.2	2.265119
6	Process Feed HIHTL (To TSCR)	64.986	6.6367	207.9955	187.9952	677.2	681.0	20.000343
7		64.986	10.2414	187.4046	186.7958	681.0	681.0	0.608791
8		59.987	9.4535	186.9296	185.9279	681.0	681.0	1.001767
9	Feed Recirc HIHTL (From TSCR)	59.987	6.1261	186.3107	172.7918	681.0	677.2	13.518846
10	Jumper AP07F-WT-EPDMJ-[C-D]	59.987	6.1261	172.7918	171.8805	677.2	677.0	0.911320
11	Recirc Dropleg (H-14-111336)	59.987	5.7354	0.5870	0.0000	677.0	677.0	0.587002
12		5.000	5.2793	187.4599	187.3428	681.0	681.0	0.117122
13	Pipe	5.000	5.2793	83.7045	82.9682	681.0	681.0	0.736232
14	Pipe	5.000	5.2793	82.9682	82.6291	681.0	681.0	0.339117

CALCULATION SHEET

Project No. 079701.18.01	Calculation No. 079701.18.01-M-001	Rev. 0	Page No. 87 of 115
Title: Tank Side Cesium Removal Process System Flow Analysis			
Prepared By: JF Gallegos	Date: 7/22/19	Checked By: KW Dixon	Date: 7/22/19

AFT Fathom 9 (Output)
7/18/2019
Page 4

AFT Fathom Model

Pipe	Name	Vol. Flow Rate (gal/min)	Velocity (feet/sec)	P Static Max (psig)	P Static Min (psig)	Elevation Inlet (feet)	Elevation Outlet (feet)	dP Stag. Total (psid)
15	Pipe	5.000	5.2793	82.6104	82.2143	681.0	681.0	0.396098
16	Pipe	5.000	0.4781	82.4527	82.4484	681.0	681.0	0.004236
17	Pipe	5.000	1.8561	81.4207	81.3736	681.0	681.0	0.047033
18	Pipe	5.000	5.2793	81.1630	80.1730	681.0	681.0	0.989989
19	Pipe	5.000	5.2793	80.1542	80.0795	681.0	681.0	0.074729
20	Pipe	5.000	5.2793	80.0795	75.3422	681.0	687.0	4.737265
21	Pipe	5.000	5.2793	75.3422	74.7387	687.0	687.0	0.603505
22	Pipe	5.000	5.2793	74.7075	74.5484	687.0	687.0	0.159071
23	Pipe	5.000	5.2793	74.5484	74.3706	687.0	687.0	0.177836
24	Inlet Hose	5.000	1.8561	74.5812	74.4749	687.0	687.0	0.106263
25	Outlet Hose	5.000	1.8561	66.4749	66.4236	687.0	687.0	0.051340
26	Pipe	5.000	5.2793	66.2130	65.7693	687.0	687.0	0.443629
27	Pipe	5.000	5.2793	65.7693	65.6850	687.0	687.0	0.084343
28	Pipe	5.000	5.2793	65.6537	65.3146	687.0	687.0	0.339117
29	Pipe	5.000	5.2793	65.3146	65.0157	687.0	687.0	0.298915
30	Pipe	5.000	5.2793	65.0157	64.6766	687.0	687.0	0.339117
31	Pipe	5.000	5.2793	64.6453	64.3180	687.0	687.0	0.327294
32	Inlet Hose	5.000	1.8561	64.5286	64.4224	687.0	687.0	0.106263
33	Outlet Hose	5.000	1.8561	58.4224	58.3710	687.0	687.0	0.051340
34	Pipe	5.000	5.2793	58.1604	57.6324	687.0	687.0	0.527972
35	Pipe	5.000	5.2793	57.2620	56.9631	687.0	687.0	0.298915
36	Pipe	0.000	0.0000	57.2035	57.2035	687.0	687.0	0.000000
37	Pipe	0.000	0.0000	56.7793	56.7793	687.0	687.0	0.000000
38	Pipe	0.000	0.0000	56.7793	56.7793	687.0	687.0	0.000000
39	Inlet Hose	0.000	0.0000	56.7793	56.7793	687.0	687.0	0.000000
40	Outlet Hose	0.000	0.0000	56.7793	56.7793	687.0	687.0	0.000000
41	Pipe	0.000	0.0000	56.7793	56.7793	687.0	687.0	0.000000
42	Pipe	0.000	0.0000	56.7793	56.7793	687.0	687.0	0.000000
43	Pipe	0.000	0.0000	56.7793	56.7793	687.0	687.0	0.000000
44	Pipe	0.000	0.0000	56.7793	56.7793	687.0	687.0	0.000000
45	Pipe	5.000	5.2793	56.5390	55.8343	687.0	687.0	0.704627
46	Pipe	5.000	5.2793	55.8030	55.3892	687.0	687.0	0.413845
47	Pipe	5.000	5.2793	54.3892	53.6066	687.0	687.0	0.782582
48	Pipe	5.000	5.2793	53.5879	52.1295	687.0	687.0	1.458367
49	Pipe	5.000	5.2793	52.1295	51.1974	687.0	687.0	0.932039
50	Pipe	5.000	5.2793	51.1787	50.0000	687.0	687.0	1.178680
51	Pipe	5.000	5.2793	17.5771	17.4276	687.0	687.0	0.149457
52	Pipe	5.000	5.2793	1.7447	-0.1559	687.0	681.0	1.900604
53	Pipe	5.000	5.2793	-0.1872	-0.4861	681.0	681.0	0.298915
54	Treated Effluent HIHTL (From TSCR)	5.000	0.5106	0.0000	-0.4431	681.0	680.0	-0.443138

CALCULATION SHEET

Project No. 079701.18.01	Calculation No. 079701.18.01-M-001	Rev. 0	Page No. 88 of 115
Title: Tank Side Cesium Removal Process System Flow Analysis			
Prepared By: JF Gallegos	Date: 7/22/19	Checked By: KW Dixon	Date: 7/22/19

AFT Fathom 9 (Output)
7/18/2019
Page 5

AFT Fathom Model

Pipe	Name	Vol. Flow Rate (gal/min)	Velocity (feet/sec)	P Static Max (psig)	P Static Min (psig)	Elevation Inlet (feet)	Elevation Outlet (feet)	dP Stag. Total (psid)
55	Pipe	0.000	0.0000	83.2086	83.2086	681.0	681.0	0.000000
56	Pipe	0.000	0.0000	80.3199	80.3199	681.0	681.0	0.000000
57	Pipe	0.000	0.0000	80.3199	80.3199	681.0	681.0	0.000000
58	Pipe	0.000	0.0000	80.3199	80.3199	681.0	681.0	0.000000
59	Pipe	0.000	0.0000	80.3199	80.3199	681.0	681.0	0.000000
60	Pipe	0.000	0.0000	80.3199	80.3199	681.0	681.0	0.000000
61	Pipe	0.000	0.0000	75.5826	75.5826	687.0	687.0	0.000000
62	Pipe	0.000	0.0000	74.7887	74.7887	687.0	687.0	0.000000
63	Pipe	0.000	0.0000	75.5826	75.5826	687.0	687.0	0.000000
64	Pipe	0.000	0.0000	65.5549	65.5549	687.0	687.0	0.000000
65	Pipe	0.000	0.0000	66.0097	66.0097	687.0	687.0	0.000000
66	Pipe	0.000	0.0000	56.7793	56.7793	687.0	687.0	0.000000
67	Pipe	0.000	0.0000	65.2560	65.2560	687.0	687.0	0.000000
68	Pipe	0.000	0.0000	57.5024	57.5024	687.0	687.0	0.000000
70	Pipe	5.000	5.2793	56.8475	56.5390	687.0	687.0	0.308529
71	Pipe	5.000	5.2793	56.9631	56.8788	687.0	687.0	0.084343
72	Pipe	0.000	0.0000	56.7793	56.7793	687.0	687.0	0.000000
89	Pipe	5.000	5.2793	57.6011	57.2620	687.0	687.0	0.339117
91	Pipe	0.000	0.0000	56.7793	56.7793	687.0	687.0	0.000000

Pipe	dP Static Total (psid)	dP Gravity (psid)	dH (feet)	P Static In (psig)	P Static Out (psig)	P Stag. In (psig)	P Stag. Out (psig)
3	0.005888	0.0000	0.010610	211.6043	211.5984	211.60876	211.602875
4	0.962394	0.0000	1.734308	211.2699	210.3075	211.60287	210.640472
5	2.265119	1.1098	2.081919	210.2606	207.9955	210.64047	208.375366
6	20.000343	2.1087	32.242171	207.9955	187.9952	208.37537	188.375015
7	0.608791	0.0000	1.097088	187.4046	186.7958	188.30910	187.700302
8	1.001767	0.0000	1.805261	186.9296	185.9279	187.70030	186.698547
9	13.518846	-2.1087	28.161988	186.3107	172.7918	186.63429	173.115448
10	0.911320	-0.1110	1.842280	172.7918	171.8805	173.11545	172.204132
11	0.587002	0.0000	1.057823	0.5870	0.0000	0.87067	0.283672
12	0.117122	0.0000	0.211063	187.4599	187.3428	187.70030	187.583191
13	0.736232	0.0000	1.326747	83.7045	82.9682	83.94482	83.208603
14	0.339117	0.0000	0.611114	82.9682	82.6291	83.20860	82.869476

CALCULATION SHEET

Project No. 079701.18.01	Calculation No. 079701.18.01-M-001	Rev. 0	Page No. 89 of 115
Title: Tank Side Cesium Removal Process System Flow Analysis			
Prepared By: JF Gallegos	Date: 7/22/19	Checked By: KW Dixon	Date: 7/22/19

AFT Fathom 9 (Output)
7/18/2019
Page 6

AFT Fathom Model

Pipe	dP Static Total (psid)	dP Gravity (psid)	dH (feet)	P Static In (psig)	P Static Out (psig)	P Stag. In (psig)	P Stag. Out (psig)
15	0.396098	0.0000	0.713799	82.6104	82.2143	82.85071	82.454620
16	0.004236	0.0000	0.007634	82.4527	82.4484	82.45462	82.450378
17	0.047033	0.0000	0.084757	81.4207	81.3736	81.45038	81.403351
18	0.989989	0.0000	1.784036	81.1630	80.1730	81.40335	80.413361
19	0.074729	0.0000	0.134667	80.1542	80.0795	80.39459	80.319870
20	4.737265	3.3295	2.536915	80.0795	75.3422	80.31987	75.582596
21	0.603505	0.0000	1.087562	75.3422	74.7387	75.58260	74.979095
22	0.159071	0.0000	0.286659	74.7075	74.5484	74.94781	74.788742
23	0.177836	0.0000	0.320475	74.5484	74.3706	74.78874	74.610916
24	0.106263	0.0000	0.191495	74.5812	74.4749	74.61092	74.504654
25	0.051340	0.0000	0.092519	66.4749	66.4236	66.50465	66.453308
26	0.443629	0.0000	0.799454	66.2130	65.7693	66.45331	66.009674
27	0.084343	0.0000	0.151992	65.7693	65.6850	66.00967	65.925339
28	0.339117	0.0000	0.611114	65.6537	65.3146	65.89406	65.554947
29	0.298915	0.0000	0.538667	65.3146	65.0157	65.55495	65.256027
30	0.339117	0.0000	0.611114	65.0157	64.6766	65.25603	64.916916
31	0.327294	0.0000	0.589808	64.6453	64.3180	64.88564	64.558334
32	0.106263	0.0000	0.191495	64.5286	64.4224	64.55833	64.452072
33	0.051340	0.0000	0.092519	58.4224	58.3710	58.45208	58.400738
34	0.527972	0.0000	0.951446	58.1604	57.6324	58.40074	57.872761
35	0.298915	0.0000	0.538667	57.2620	56.9631	57.50237	57.203457
36	0.000000	0.0000	0.000000	57.2035	57.2035	57.20346	57.203457
37	0.000000	0.0000	0.000000	56.7793	56.7793	56.77931	56.779308
38	0.000000	0.0000	0.000000	56.7793	56.7793	56.77931	56.779308
39	0.000000	0.0000	0.000000	56.7793	56.7793	56.77931	56.779308
40	0.000000	0.0000	0.000000	56.7793	56.7793	56.77931	56.779308
41	0.000000	0.0000	0.000000	56.7793	56.7793	56.77931	56.779308
42	0.000000	0.0000	0.000000	56.7793	56.7793	56.77931	56.779308
43	0.000000	0.0000	0.000000	56.7793	56.7793	56.77931	56.779308
44	0.000000	0.0000	0.000000	56.7793	56.7793	56.77931	56.779308
45	0.704627	0.0000	1.269792	56.5390	55.8343	56.77931	56.074680
46	0.413845	0.0000	0.745781	55.8030	55.3892	56.04340	55.629559
47	0.782582	0.0000	1.410273	54.3892	53.6066	54.62956	53.846973
48	1.458367	0.0000	2.628089	53.5879	52.1295	53.82821	52.369846
49	0.932039	0.0000	1.679607	52.1295	51.1974	52.36985	51.437801
50	1.178680	0.0000	2.124072	51.1787	50.0000	51.41904	50.240360
51	0.149457	0.0000	0.269334	17.5771	17.4276	17.81742	17.667961
52	1.900604	-3.3295	9.425035	1.7447	-0.1559	1.98503	0.084424
53	0.298915	0.0000	0.538667	-0.1872	-0.4861	0.05315	-0.245768
54	-0.443138	-0.5549	0.201432	-0.4431	0.0000	-0.44089	0.002249

CALCULATION SHEET

Project No. 079701.18.01	Calculation No. 079701.18.01-M-001	Rev. 0	Page No. 90 of 115
Title: Tank Side Cesium Removal Process System Flow Analysis			
Prepared By: JF Gallegos	Date: 7/22/19	Checked By: KW Dixon	Date: 7/22/19

AFT Fathom 9 (Output)
7/18/2019
Page 7

AFT Fathom Model

Pipe	dP Static Total (psid)	dP Gravity (psid)	dH (feet)	P Static In (psig)	P Static Out (psig)	P Stag. In (psig)	P Stag. Out (psig)
55	0.000000	0.0000	0.000000	83.2086	83.2086	83.20860	83.208603
56	0.000000	0.0000	0.000000	80.3199	80.3199	80.31987	80.319870
57	0.000000	0.0000	0.000000	80.3199	80.3199	80.31987	80.319870
58	0.000000	0.0000	0.000000	80.3199	80.3199	80.31987	80.319870
59	0.000000	0.0000	0.000000	80.3199	80.3199	80.31987	80.319870
60	0.000000	0.0000	0.000000	80.3199	80.3199	80.31987	80.319870
61	0.000000	0.0000	0.000000	75.5826	75.5826	75.58260	75.582596
62	0.000000	0.0000	0.000000	74.7887	74.7887	74.78874	74.788742
63	0.000000	0.0000	0.000000	75.5826	75.5826	75.58260	75.582596
64	0.000000	0.0000	0.000000	65.5549	65.5549	65.55495	65.554947
65	0.000000	0.0000	0.000000	66.0097	66.0097	66.00967	66.009674
66	0.000000	0.0000	0.000000	56.7793	56.7793	56.77931	56.779308
67	0.000000	0.0000	0.000000	65.2560	65.2560	65.25603	65.256027
68	0.000000	0.0000	0.000000	57.5024	57.5024	57.50237	57.502369
70	0.308529	0.0000	0.555993	56.8475	56.5390	57.08783	56.779308
71	0.084343	0.0000	0.151992	56.9631	56.8788	57.20346	57.119114
72	0.000000	0.0000	0.000000	56.7793	56.7793	56.77931	56.779308
89	0.339117	0.0000	0.611114	57.6011	57.2620	57.84149	57.502369
91	0.000000	0.0000	0.000000	56.7793	56.7793	56.77931	56.779308

All Junction Table

Jct	Name	P Static In (psig)	P Static Out (psig)	P Stag. In (psig)	P Stag. Out (psig)	Vol. Flow Rate Thru Jct (gal/min)	Mass Flow Rate Thru Jct (lbm/sec)	Loss Factor (K)
1	Pump AP-07F	20.1389	211.604279	20.143417	211.60876	64.986	11.5699	0.00000
4	Pump Discharge Nozzle	211.5984	211.269943	211.602875	211.60287	64.986	11.5699	0.00000
5	Branch	210.3075	210.260635	210.640472	210.64047	64.986	11.5699	0.00000
6	Branch	207.9955	207.995529	208.375366	208.37537	64.986	11.5699	0.00000
7		187.9952	187.404587	188.375015	188.30910	64.986	11.5699	0.17355
8	Branch	187.1027	187.102676	187.700302	187.70030	N/A	N/A	0.00000
9	Area Change	185.9279	186.310654	186.698547	186.63429	59.987	10.6797	0.08337
10	Branch	172.7918	172.791809	173.115448	173.11545	59.987	10.6797	0.00000
12	AP-07F	0.0000	-0.283672	0.283672	0.00000	59.987	10.6797	1.00000
13	Branch	83.1018	83.101776	83.208603	83.20860	N/A	N/A	0.00000
14	Valve	82.6291	82.610352	82.869476	82.85071	5.000	0.8902	0.07807
15	Branch	82.2143	82.452652	82.454620	82.45462	5.000	0.8902	0.00000
16	Pre-Filter (WP-FLT-325A)	82.4484	81.420670	82.450378	81.45038	5.000	0.8902	507.40103
17	Branch	81.3736	81.162994	81.403351	81.40335	5.000	0.8902	0.00000
18	Valve	80.1730	80.154236	80.413361	80.39459	5.000	0.8902	0.07807
19	Branch	80.2130	80.213043	80.319870	80.31987	N/A	N/A	0.00000

CALCULATION SHEET

Project No. 079701.18.01	Calculation No. 079701.18.01-M-001	Rev. 0	Page No. 91 of 115
Title: Tank Side Cesium Removal Process System Flow Analysis			
Prepared By: JF Gallegos	Date: 7/22/19	Checked By: KW Dixon	Date: 7/22/19

AFT Fathom 9 (Output)
7/18/2019
Page 8

AFT Fathom Model

Jct	Name	P Static In (psig)	P Static Out (psig)	P Stag. In (psig)	P Stag. Out (psig)	Vol. Flow Rate Thru Jct (gal/min)	Mass Flow Rate Thru Jct (lbm/sec)	Loss Factor (K)
20	Branch	75.5225	75.522507	75.582596	75.58260	N/A	N/A	0.00000
21	Valve	74.7387	74.707458	74.979095	74.94781	5.000	0.8902	0.13013
22	Branch	74.6819	74.681915	74.788742	74.78874	N/A	N/A	0.00000
23	Branch	74.3706	74.581207	74.610916	74.61092	5.000	0.8902	0.00000
24	Ion-Exchange Column (WP-IX-400A)	74.4749	66.474945	74.504654	66.50465	5.000	0.8902	269.26590
25	Branch	66.4236	66.212952	66.453308	66.45331	5.000	0.8902	0.00000
26	Branch	65.9028	65.902847	66.009674	66.00967	N/A	N/A	0.00000
27	Valve	65.6850	65.653702	65.925339	65.89406	5.000	0.8902	0.13013
28	Branch	65.4481	65.448120	65.554947	65.55495	N/A	N/A	0.00000
29	Branch	65.1492	65.149200	65.256027	65.25603	N/A	N/A	0.00000
30	Valve	64.6766	64.645279	64.916916	64.88564	5.000	0.8902	0.13013
31	Branch	64.3180	64.528625	64.558334	64.55833	5.000	0.8902	0.00000
32	Ion-Exchange Column (WP-IX-400B)	64.4224	58.422367	64.452072	58.45208	5.000	0.8902	201.94946
33	Branch	58.3710	58.160381	58.400738	58.40074	5.000	0.8902	0.00000
34	Valve	57.6324	57.601131	57.872761	57.84149	5.000	0.8902	0.13013
35	Branch	57.3955	57.395542	57.502369	57.50237	N/A	N/A	0.00000
36	Branch	57.0966	57.096630	57.203457	57.20346	N/A	N/A	0.00000
X37	Valve	57.2035	56.779308	57.203457	56.77931	0.000	0.0000	0.00000
38	Branch	56.7793	56.779308	56.779308	56.77931	N/A	N/A	0.00000
39	Branch	56.7793	56.779308	56.779308	56.77931	0.000	0.0000	0.00000
40	Ion-Exchange Column (WP-IX-400C)	56.7793	56.779308	56.779308	56.77931	0.000	0.0000	0.00000
41	Branch	56.7793	56.779308	56.779308	56.77931	0.000	0.0000	0.00000
42	WP-AOV-408C Fail Close	56.7793	56.779308	56.779308	56.77931	0.000	0.0000	0.00000
43	Branch	56.7793	56.779308	56.779308	56.77931	N/A	N/A	0.00000
44	Valve	56.7793	56.779308	56.779308	56.77931	0.000	0.0000	0.00000
45	Branch	56.7192	56.719219	56.779308	56.77931	N/A	N/A	0.00000
46	Valve	55.8343	55.803043	56.074680	56.04340	5.000	0.8902	0.13013
47	Media Trap	55.3892	54.389202	55.629559	54.62956	5.000	0.8902	4.16055
48	Valve	53.6066	53.587856	53.846973	53.82821	5.000	0.8902	0.07807
49	Delay Tank	52.1295	52.129490	52.369846	52.36985	5.000	0.8902	0.00000
50	Valve	51.1974	51.178684	51.437801	51.41904	5.000	0.8902	0.07807
51	WP-PCV-557	50.0000	17.577065	50.240360	17.81742	5.000	0.8902	134.89731
53	WP-AOV-560 Fail Close	-0.1559	-0.187205	0.084424	0.05315	5.000	0.8902	0.13013
54	Area Change	-0.4861	-0.443138	-0.245768	-0.44089	5.000	0.8902	0.81181
55	AP-106 Riser 2	0.0000	-0.002249	0.002249	0.00000	5.000	0.8902	1.00000
X56	Valve	83.2086	80.319870	83.208603	80.31987	0.000	0.0000	0.00000
57	Branch	80.3199	80.319870	80.319870	80.31987	0.000	0.0000	0.00000
58	Pre-Filter (WP-FLT-325B)	80.3199	80.319870	80.319870	80.31987	0.000	0.0000	0.00000
59	Branch	80.3199	80.319870	80.319870	80.31987	0.000	0.0000	0.00000
60	Valve	80.3199	80.319870	80.319870	80.31987	0.000	0.0000	0.00000

CALCULATION SHEET

Project No. 079701.18.01	Calculation No. 079701.18.01-M-001	Rev. 0	Page No. 92 of 115
Title: Tank Side Cesium Removal Process System Flow Analysis			
Prepared By: JF Gallegos	Date: 7/22/19	Checked By: KW Dixon	Date: 7/22/19

AFT Fathom 9 (Output)
7/18/2019
Page 9

AFT Fathom Model

Jct	Name	P Static In (psig)	P Static Out (psig)	P Stag. In (psig)	P Stag. Out (psig)	Vol. Flow Rate Thru Jct (gal/min)	Mass Flow Rate Thru Jct (lbm/sec)	Loss Factor (K)
X61	Valve	75.5826	65.554947	75.582596	65.55495	0.000	0.0000	0.00000
X62	Valve	66.0097	56.779308	66.009674	56.77931	0.000	0.0000	0.00000
X63	Valve	65.2560	57.502369	65.256027	57.50237	0.000	0.0000	0.00000
X64	Valve	75.5826	56.779308	75.582596	56.77931	0.000	0.0000	0.00000
65	Valve	56.8788	56.847477	57.119114	57.08783	5.000	0.8902	0.13013
X66	Valve	56.7793	74.788742	56.779308	74.78874	0.000	0.0000	0.00000
81	WP-FCV-306	187.3428	83.704468	187.583191	83.94482	5.000	0.8902	431.19266
100	Orifice	17.4276	1.744677	17.667961	1.98503	5.000	0.8902	65.24963
101	Orifice	171.8805	0.587002	172.204132	0.87067	59.987	10.6797	529.39990

Area Change Table

Area Change	Name	P Static In (psig)	P Static Out (psig)	P Stag. In (psig)	P Stag. Out (psig)	Vol. Flow Rate Thru Jct (gal/min)	Mass Flow Rate Thru Jct (lbm/sec)	Loss Factor (K)
7		187.9952	187.404587	188.375015	188.30910	64.986	11.5699	0.17355
9	Area Change	185.9279	186.310654	186.698547	186.63429	59.987	10.6797	0.08337
54	Area Change	-0.4861	-0.443138	-0.245768	-0.44089	5.000	0.8902	0.81181

Control Valve Table

Control Valve	Name	P Static In (psig)	P Static Out (psig)	P Stag. In (psig)	P Stag. Out (psig)	Vol. Flow Rate Thru Jct (gal/min)	Mass Flow Rate Thru Jct (lbm/sec)	Loss Factor (K)
51	WP-PCV-557	50.0000	17.577065	50.240360	17.81742	5.000	0.8902	134.89731
81	WP-FCV-306	187.3428	83.704468	187.583191	83.94482	5.000	0.8902	431.19266

General Component Table

General Component	Name	P Static In (psig)	P Static Out (psig)	P Stag. In (psig)	P Stag. Out (psig)	Vol. Flow Rate Thru Jct (gal/min)	Mass Flow Rate Thru Jct (lbm/sec)	Loss Factor (K)
16	Pre-Filter (WP-FLT-325A)	82.4484	81.420670	82.450378	81.45038	5.000	0.8902	507.40103
24	Ion-Exchange Column (WP-IX-400A)	74.4749	66.474945	74.504654	66.50465	5.000	0.8902	269.26590
32	Ion-Exchange Column (WP-IX-400B)	64.4224	58.422367	64.452072	58.45208	5.000	0.8902	201.94946
40	Ion-Exchange Column (WP-IX-400C)	56.7793	56.779308	56.779308	56.77931	0.000	0.0000	0.00000
47	Media Trap	55.3892	54.389202	55.629559	54.62956	5.000	0.8902	4.16055
49	Delay Tank	52.1295	52.129490	52.369846	52.36985	5.000	0.8902	0.00000
58	Pre-Filter (WP-FLT-325B)	80.3199	80.319870	80.319870	80.31987	0.000	0.0000	0.00000

Orifice Table

CALCULATION SHEET

Project No. 079701.18.01	Calculation No. 079701.18.01-M-001	Rev. 0	Page No. 93 of 115
Title: Tank Side Cesium Removal Process System Flow Analysis			
Prepared By: JF Gallegos	Date: 7/22/19	Checked By: KW Dixon	Date: 7/22/19

AFT Fathom 9 (Output)
7/18/2019
Page 10

AFT Fathom Model

Orifice	Name	P Static In (psig)	P Static Out (psig)	P Stag. In (psig)	P Stag. Out (psig)	Vol. Flow Rate Thru Jct (gal/min)	Mass Flow Rate Thru Jct (lbm/sec)	Loss Factor (K)
100	Orifice	17.4276	1.744677	17.667961	1.98503	5.000	0.8902	65.24963
101	Orifice	171.8805	0.587002	172.204132	0.87067	59.987	10.6797	529.39990

Pump Table

Pump	Name	P Static In (psig)	P Static Out (psig)	P Stag. In (psig)	P Stag. Out (psig)	Vol. Flow Rate Thru Jct (gal/min)	Mass Flow Rate Thru Jct (lbm/sec)	Loss Factor (K)
1	Pump AP-07F	20.1389	211.604279	20.143417	211.60876	64.986	11.5699	0.00000

Valve Table

Valve	Name	P Static In (psig)	P Static Out (psig)	P Stag. In (psig)	P Stag. Out (psig)	Vol. Flow Rate Thru Jct (gal/min)	Mass Flow Rate Thru Jct (lbm/sec)	Loss Factor (K)
14	Valve	82.6291	82.610352	82.869476	82.85071	5.000	0.8902	0.07807
18	Valve	80.1730	80.154236	80.413361	80.39459	5.000	0.8902	0.07807
21	Valve	74.7387	74.707458	74.979095	74.94781	5.000	0.8902	0.13013
27	Valve	65.6850	65.653702	65.925339	65.89406	5.000	0.8902	0.13013
30	Valve	64.6766	64.645279	64.916916	64.88564	5.000	0.8902	0.13013
34	Valve	57.6324	57.601131	57.872761	57.84149	5.000	0.8902	0.13013
X37	Valve	57.2035	56.779308	57.203457	56.77931	0.000	0.0000	0.00000
42	WP-AOV-408C Fail Close	56.7793	56.779308	56.779308	56.77931	0.000	0.0000	0.00000
44	Valve	56.7793	56.779308	56.779308	56.77931	0.000	0.0000	0.00000
46	Valve	55.8343	55.803043	56.074680	56.04340	5.000	0.8902	0.13013
48	Valve	53.6066	53.587856	53.846973	53.82821	5.000	0.8902	0.07807
50	Valve	51.1974	51.178684	51.437801	51.41904	5.000	0.8902	0.07807
53	WP-AOV-560 Fail Close	-0.1559	-0.187205	0.084424	0.05315	5.000	0.8902	0.13013
X56	Valve	83.2086	80.319870	83.208603	80.31987	0.000	0.0000	0.00000
60	Valve	80.3199	80.319870	80.319870	80.31987	0.000	0.0000	0.00000
X61	Valve	75.5826	65.554947	75.582596	65.55495	0.000	0.0000	0.00000
X62	Valve	66.0097	56.779308	66.009674	56.77931	0.000	0.0000	0.00000
X63	Valve	65.2560	57.502369	65.256027	57.50237	0.000	0.0000	0.00000
X64	Valve	75.5826	56.779308	75.582596	56.77931	0.000	0.0000	0.00000
65	Valve	56.8788	56.847477	57.119114	57.08783	5.000	0.8902	0.13013
X66	Valve	56.7793	74.788742	56.779308	74.78874	0.000	0.0000	0.00000

CALCULATION SHEET

Project No. 079701.18.01	Calculation No. 079701.18.01-M-001	Rev. 0	Page No. 94 of 115
Title: Tank Side Cesium Removal Process System Flow Analysis			
Prepared By: JF Gallegos	Date: 7/22/19	Checked By: KW Dixon	Date: 7/22/19

APPENDIX F

FATHOM MODEL OUTPUTS FOR HIGH HEAD LOSS

CALCULATION SHEET

Project No. 079701.18.01	Calculation No. 079701.18.01-M-001	Rev. 0	Page No. 95 of 115
Title: Tank Side Cesium Removal Process System Flow Analysis			
Prepared By: JF Gallegos	Date: 7/22/19	Checked By: KW Dixon	Date: 7/22/19

AFT Fathom 9 (Output) 7/18/2019 Page 1	AFT Fathom Model	

Model Reference Information

General

Title: AFT Fathom Model
Analysis run on: 7/18/2019 8:40:39 AM
Application version: AFT Fathom Version 9 (2016.01.20)
Input File: P:\Clients\Atkins Energy Federal EPC, Inc\078906.18.01 - Design of TSCR Upgrades\Calculations\Mechanical\M-002 \Rev 0\Fathom V&V\TSCR Pump Sizing.fth
Scenario: Base Scenario/Dirty
Output File: P:\Clients\Atkins Energy Federal EPC, Inc\078906.18.01 - Design of TSCR Upgrades\Calculations\Mechanical\M-002 \Rev 0\Fathom V&V\TSCR Pump Sizing_2.out

Execution Time= 0.37 seconds
Total Number Of Head/Pressure Iterations= 359
Total Number Of Flow Iterations= 30
Total Number Of Temperature Iterations= 0
Number Of Pipes= 71
Number Of Junctions= 65
Matrix Method= Gaussian Elimination

Pressure/Head Tolerance= 0.0001 relative change
Flow Rate Tolerance= 0.0001 relative change
Temperature Tolerance= 0.0001 relative change
Flow Relaxation= (Automatic)
Pressure Relaxation= (Automatic)

Constant Fluid Property Model
Fluid Database: User Specified
Fluid= User Specified
Density= 1.25 kg/liter
Viscosity= 5 centipoise
Vapor Pressure= 7.52 psia
Viscosity Model= Newtonian
Apply laminar and non-Newtonian correction to: Pipe Fittings & Losses, Junction K factors, Junction Special Losses, Junction Polynomials
Corrections applied to the following junctions: Branch, Reservoir, Assigned Flow, Assigned Pressure, Area Change, Tee or Wye, Spray Discharge, Relief Valve

Ambient Pressure (constant)= 1 atm
Gravitational Acceleration= 1 g
Turbulent Flow Above Reynolds Number= 4000
Laminar Flow Below Reynolds Number= 2300
Total Inflow= 61.39 gal/min
Total Outflow= 61.39 gal/min
Maximum Static Pressure is 202.8 psia at Pipe 1 Inlet
Minimum Static Pressure is 14.21 psia at Pipe 53 Outlet

Warnings

No Warnings

Pump Summary

CALCULATION SHEET

Project No. 079701.18.01	Calculation No. 079701.18.01-M-001	Rev. 0	Page No. 96 of 115
Title: Tank Side Cesium Removal Process System Flow Analysis			
Prepared By: JF Gallegos	Date: 7/22/19	Checked By: KW Dixon	Date: 7/22/19

AFT Fathom 9 (Output)
7/18/2019
Page 2

AFT Fathom Model

Jct	Results Diagram	Name	Vol. Flow (gal/min)	Mass Flow (lbm/sec)	dP (psid)	dH (feet)	Overall Efficiency (Percent)	Speed (Percent)	Overall Power (hp)	BEP (gal/min)	% of BEP (Percent)
1	Show ...	Pump AP-07F	61.39	10.67	215.0	396.8	N/A	100.0	7.699	N/A	N/A

Jct	NPSHA (feet)	NPSHR (feet)
1	-36.46	N/A

Valve Summary

Jct	Name	Valve Type	Vol. Flow (gal/min)	Mass Flow (lbm/sec)	dP Stag. (psid)	dH (feet)	P Static In (psig)	Cv	K
14	Valve	REGULAR	5.000	0.8693	0.01833	0.03382	119.9137	41.3130	0.07807
18	Valve	REGULAR	5.000	0.8693	0.01833	0.03382	115.3574	41.3130	0.07807
X21	Valve	REGULAR	0.000	0.0000	N/A	N/A	110.6663	N/A	N/A
27	Valve	REGULAR	5.000	0.8693	0.03054	0.05636	79.6391	32.0000	0.13013
30	Valve	REGULAR	5.000	0.8693	0.03054	0.05636	78.5710	32.0000	0.13013
34	Valve	REGULAR	5.000	0.8693	0.03054	0.05636	62.3933	32.0000	0.13013
X37	Valve	REGULAR	0.000	0.0000	N/A	N/A	61.9050	N/A	N/A
42	WP-AOV-408C Fail Close	REGULAR	5.000	0.8693	0.03054	0.05636	98.5324	32.0000	0.13013
X44	Valve	REGULAR	0.000	0.0000	N/A	N/A	98.6497	N/A	N/A
46	Valve	REGULAR	5.000	0.8693	0.03054	0.05636	60.3875	32.0000	0.13013
48	Valve	REGULAR	5.000	0.8693	0.01833	0.03382	54.0497	41.3130	0.07807
50	Valve	REGULAR	5.000	0.8693	0.01833	0.03382	51.3360	41.3130	0.07807
53	WP-AOV-560 Fail Close	REGULAR	5.000	0.8693	0.03054	0.05636	-0.1075	32.0000	0.13013
X56	Valve	REGULAR	0.000	0.0000	N/A	N/A	120.4935	N/A	N/A
60	Valve	REGULAR	0.000	0.0000	N/A	N/A	115.4870	N/A	N/A
X61	Valve	REGULAR	0.000	0.0000	N/A	N/A	110.6663	N/A	N/A
X62	Valve	REGULAR	0.000	0.0000	N/A	N/A	79.9700	N/A	N/A
X63	Valve	REGULAR	0.000	0.0000	N/A	N/A	79.1507	N/A	N/A
64	Valve	REGULAR	5.000	0.8693	0.03054	0.05636	107.6612	32.0000	0.13013
65	Valve	REGULAR	5.000	0.8693	0.03054	0.05636	61.5740	32.0000	0.13013
66	Valve	REGULAR	5.000	0.8693	0.03054	0.05636	97.9845	32.0000	0.13013
51	WP-PCV-557	PSV	5.000	0.8693	31.87376	58.81751	50.0000	0.9906	135.79510
81	WP-FCV-306	FCV	5.000	0.8693	42.65475	78.71197	163.7297	0.8563	181.72650

CALCULATION SHEET

Project No. 079701.18.01	Calculation No. 079701.18.01-M-001	Rev. 0	Page No. 97 of 115
Title: Tank Side Cesium Removal Process System Flow Analysis			
Prepared By: JF Gallegos	Date: 7/22/19	Checked By: KW Dixon	Date: 7/22/19

AFT Fathom 9 (Output) 7/18/2019 Page 3	AFT Fathom Model	

Jct	Valve State	Open Percentage (Percent)
14	Open	N/A
18	Open	N/A
X21	Closed By User	N/A
27	Open	100.00
30	Open	100.00
34	Open	100.00
X37	Closed By User	N/A
42	Open	100.00
X44	Closed By User	N/A
46	Open	100.00
48	Open	N/A
50	Open	N/A
53	Open	100.00
X56	Closed By User	N/A
60	Open	N/A
X61	Closed By User	N/A
X62	Closed By User	N/A
X63	Closed By User	N/A
64	Open	100.00
65	Open	100.00
66	Open	100.00
51	Open	50.17
81	Open	45.88

Pipe Output Table

Pipe	Name	Vol. Flow Rate (gal/min)	Velocity (feet/sec)	P Static Max (psig)	P Static Min (psig)	Elevation Inlet (feet)	Elevation Outlet (feet)	dP Stag. Total (psid)
1	Pump Piping	61.389	0.6817	188.086884	188.0816	675.2	675.2	0.005253
4	Jumper AP07F-WT-J-[P1-P2-(A)]	61.389	5.8695	187.795425	186.9234	675.2	675.2	0.872010
5	Jumper AP-07F-WT-EPDMJ-[A-B]	61.389	6.2693	186.882538	184.7611	675.2	677.2	2.121413
6	Process Feed HIHTL (To TSCR)	61.389	6.2693	184.761124	164.3973	677.2	681.0	20.363795
7		61.389	9.6745	163.882660	163.3045	681.0	681.0	0.578195
8		56.351	8.8806	163.428528	162.4724	681.0	681.0	0.956125
9	Feed Recirc HIHTL (From TSCR)	56.351	5.7549	162.802292	148.9630	681.0	677.2	13.839339
10	Jumper AP07F-WT-EPDMJ-[C-D]	56.351	5.7549	148.962967	148.1571	677.2	677.0	0.805887
11	Recirc Dropleg (H-14-111336)	56.351	5.3878	0.538107	0.0000	677.0	677.0	0.538107
12		5.000	5.2793	163.857971	163.7297	681.0	681.0	0.128262
13	Pipe	5.000	5.2793	121.074951	120.2588	681.0	681.0	0.816168
14	Pipe	5.000	5.2793	120.258789	119.9137	681.0	681.0	0.345053

CALCULATION SHEET

Project No. 079701.18.01	Calculation No. 079701.18.01-M-001	Rev. 0	Page No. 98 of 115
Title: Tank Side Cesium Removal Process System Flow Analysis			
Prepared By: JF Gallegos	Date: 7/22/19	Checked By: KW Dixon	Date: 7/22/19

AFT Fathom 9 (Output) 7/18/2019 Page 4	AFT Fathom Model	

Pipe	Name	Vol. Flow Rate (gal/min)	Velocity (feet/sec)	P Static Max (psig)	P Static Min (psig)	Elevation Inlet (feet)	Elevation Outlet (feet)	dP Stag. Total (psid)
15	Pipe	5.000	5.2793	119.895401	119.4530	681.0	681.0	0.442353
16	Pipe	5.000	0.4781	119.685852	119.6797	681.0	681.0	0.006136
17	Pipe	5.000	1.8561	116.652634	116.5993	681.0	681.0	0.053293
18	Pipe	5.000	5.2793	116.393631	115.3574	681.0	681.0	1.036208
19	Pipe	5.000	5.2793	115.339096	115.2522	681.0	681.0	0.086862
20	Pipe	5.000	5.2793	115.252228	110.4316	681.0	687.0	4.820618
21	Pipe	0.000	0.0000	110.666336	110.6663	687.0	687.0	0.000000
22	Pipe	0.000	0.0000	95.847107	95.8471	687.0	687.0	0.000000
23	Pipe	5.000	5.2793	95.612396	95.4109	687.0	687.0	0.201437
24	Inlet Hose	5.000	1.8561	95.616653	95.5007	687.0	687.0	0.115915
25	Outlet Hose	5.000	1.8561	80.500748	80.4436	687.0	687.0	0.057089
26	Pipe	5.000	5.2793	80.237946	79.7353	687.0	687.0	0.502654
27	Pipe	5.000	5.2793	79.735291	79.6391	687.0	687.0	0.096251
28	Pipe	5.000	5.2793	79.608505	79.2634	687.0	687.0	0.345053
29	Pipe	5.000	5.2793	79.263443	78.9160	687.0	687.0	0.347447
30	Pipe	5.000	5.2793	78.916000	78.5710	687.0	687.0	0.345053
31	Pipe	5.000	5.2793	78.540405	78.1653	687.0	687.0	0.375161
32	Inlet Hose	5.000	1.8561	78.370956	78.2550	687.0	687.0	0.115915
33	Outlet Hose	5.000	1.8561	63.255032	63.1979	687.0	687.0	0.057089
34	Pipe	5.000	5.2793	62.992245	62.3933	687.0	687.0	0.598905
35	Pipe	5.000	5.2793	62.017742	61.6703	687.0	687.0	0.347447
36	Pipe	0.000	0.0000	61.905010	61.9050	687.0	687.0	0.000000
37	Pipe	0.000	0.0000	107.520294	107.5203	687.0	687.0	0.000000
38	Pipe	5.000	5.2793	107.285568	106.9973	687.0	687.0	0.288299
39	Inlet Hose	5.000	1.8561	107.202972	107.0871	687.0	687.0	0.115915
40	Outlet Hose	5.000	1.8561	99.087067	99.0300	687.0	687.0	0.057089
41	Pipe	5.000	5.2793	98.824265	98.5324	687.0	687.0	0.291828
42	Pipe	5.000	5.2793	98.501892	98.4150	687.0	687.0	0.086862
43	Pipe	0.000	0.0000	98.649750	98.6497	687.0	687.0	0.000000
44	Pipe	0.000	0.0000	61.421383	61.4214	687.0	687.0	0.000000
45	Pipe	5.000	5.2793	61.186665	60.3875	687.0	687.0	0.799188
46	Pipe	5.000	5.2793	60.356930	59.9250	687.0	687.0	0.431915
47	Pipe	5.000	5.2793	54.925014	54.0497	687.0	687.0	0.875316
48	Pipe	5.000	5.2793	54.031376	52.3850	687.0	687.0	1.646338
49	Pipe	5.000	5.2793	52.385036	51.3360	687.0	687.0	1.049040
50	Pipe	5.000	5.2793	51.317677	50.0000	687.0	687.0	1.317670
51	Pipe	5.000	5.2793	18.126244	17.9525	687.0	687.0	0.173723
52	Pipe	5.000	5.2793	2.637156	-0.1075	687.0	681.0	2.744668
53	Pipe	5.000	5.2793	-0.138055	-0.4855	681.0	681.0	0.347447
54	Treated Effluent HIHTL (From TSCR)	5.000	0.5106	0.001847	-0.4435	681.0	680.0	-0.445373

CALCULATION SHEET

Project No. 079701.18.01	Calculation No. 079701.18.01-M-001	Rev. 0	Page No. 99 of 115
Title: Tank Side Cesium Removal Process System Flow Analysis			
Prepared By: JF Gallegos	Date: 7/22/19	Checked By: KW Dixon	Date: 7/22/19

AFT Fathom 9 (Output)
7/18/2019
Page 5

AFT Fathom Model

Pipe	Name	Vol. Flow Rate (gal/min)	Velocity (feet/sec)	P Static Max (psig)	P Static Min (psig)	Elevation Inlet (feet)	Elevation Outlet (feet)	dP Stag. Total (psid)
55	Pipe	0.000	0.0000	120.493515	120.4935	681.0	681.0	0.000000
56	Pipe	0.000	0.0000	115.486954	115.4870	681.0	681.0	0.000000
57	Pipe	0.000	0.0000	115.486954	115.4870	681.0	681.0	0.000000
58	Pipe	0.000	0.0000	115.486954	115.4870	681.0	681.0	0.000000
59	Pipe	0.000	0.0000	115.486954	115.4870	681.0	681.0	0.000000
60	Pipe	0.000	0.0000	115.486954	115.4870	681.0	681.0	0.000000
61	Pipe	5.000	5.2793	110.431625	107.6612	687.0	687.0	2.770457
62	Pipe	5.000	5.2793	97.953918	95.6124	687.0	687.0	2.341528
63	Pipe	0.000	0.0000	110.666336	110.6663	687.0	687.0	0.000000
64	Pipe	0.000	0.0000	79.498169	79.4982	687.0	687.0	0.000000
65	Pipe	0.000	0.0000	79.970016	79.9700	687.0	687.0	0.000000
66	Pipe	0.000	0.0000	61.421383	61.4214	687.0	687.0	0.000000
67	Pipe	0.000	0.0000	79.150726	79.1507	687.0	687.0	0.000000
68	Pipe	0.000	0.0000	62.252460	62.2525	687.0	687.0	0.000000
70	Pipe	5.000	5.2793	61.543499	61.1867	687.0	687.0	0.356836
71	Pipe	5.000	5.2793	61.670292	61.5740	687.0	687.0	0.096251
72	Pipe	5.000	5.2793	98.415039	97.9845	687.0	687.0	0.430570
89	Pipe	5.000	5.2793	62.362797	62.0177	687.0	687.0	0.345053
91	Pipe	5.000	5.2793	107.630630	107.2856	687.0	687.0	0.345053

Pipe	dP Static Total (psid)	dP Gravity (psid)	dH (feet)	P Static In (psig)	P Static Out (psig)	P Stag. In (psig)	P Stag. Out (psig)
1	0.005253	0.0000	0.009693	188.0869	188.081635	188.09081	188.085556
4	0.872010	0.0000	1.609144	187.7954	186.923416	188.08556	187.213547
5	2.121413	1.0838	1.914701	186.8825	184.761124	187.21355	185.092133
6	20.363795	2.0592	33.777872	184.7611	164.397324	185.09213	164.728333
7	0.578195	0.0000	1.066959	163.8827	163.304474	164.67088	164.092697
8	0.956125	0.0000	1.764363	163.4285	162.472397	164.09270	163.136566
9	13.839339	-2.0592	29.338093	162.8023	148.962967	163.08119	149.241867
10	0.805887	-0.1084	1.687137	148.9630	148.157074	149.24187	148.435974
11	0.538107	0.0000	0.992983	0.5381	0.000000	0.78257	0.244466
12	0.128262	0.0000	0.236685	163.8580	163.729706	164.09270	163.964432
13	0.816168	0.0000	1.506097	121.0750	120.258789	121.30968	120.493515
14	0.345053	0.0000	0.636736	120.2588	119.913727	120.49352	120.148453

CALCULATION SHEET

Project No. 079701.18.01	Calculation No. 079701.18.01-M-001	Rev. 0	Page No. 100 of 115
Title: Tank Side Cesium Removal Process System Flow Analysis			
Prepared By: JF Gallegos	Date: 7/22/19	Checked By: KW Dixon	Date: 7/22/19

AFT Fathom 9 (Output)
7/18/2019
Page 6

AFT Fathom Model

Pipe	dP Static Total (psid)	dP Gravity (psid)	dH (feet)	P Static In (psig)	P Static Out (psig)	P Stag. In (psig)	P Stag. Out (psig)
15	0.442353	0.0000	0.816285	119.8954	119.453049	120.13013	119.687775
16	0.006136	0.0000	0.011323	119.6859	119.679718	119.68777	119.681641
17	0.053293	0.0000	0.098343	116.6526	116.599350	116.68164	116.628357
18	1.036208	0.0000	1.912143	116.3936	115.357422	116.62836	115.592148
19	0.086862	0.0000	0.160288	115.3391	115.252228	115.57382	115.486954
20	4.820618	3.2515	2.895616	115.2522	110.431625	115.48695	110.666336
21	0.000000	0.0000	0.000000	110.6663	110.666336	110.66634	110.666336
22	0.000000	0.0000	0.000000	95.8471	95.847107	95.84711	95.847107
23	0.201437	0.0000	0.371718	95.6124	95.410950	95.84711	95.645676
24	0.115915	0.0000	0.213902	95.6167	95.500748	95.64568	95.529755
25	0.057089	0.0000	0.105347	80.5007	80.443649	80.52975	80.472672
26	0.502654	0.0000	0.927561	80.2379	79.735291	80.47267	79.970016
27	0.096251	0.0000	0.177614	79.7353	79.639053	79.97002	79.873764
28	0.345053	0.0000	0.636736	79.6085	79.263443	79.84322	79.498169
29	0.347447	0.0000	0.641153	79.2634	78.916000	79.49817	79.150726
30	0.345053	0.0000	0.636736	78.9160	78.570953	79.15073	78.805664
31	0.375161	0.0000	0.692294	78.5404	78.165253	78.77513	78.399963
32	0.115915	0.0000	0.213902	78.3710	78.255035	78.39996	78.284042
33	0.057089	0.0000	0.105347	63.2550	63.197948	63.28405	63.226963
34	0.598905	0.0000	1.105175	62.9922	62.393337	63.22696	62.628056
35	0.347447	0.0000	0.641153	62.0177	61.670292	62.25246	61.905010
36	0.000000	0.0000	0.000000	61.9050	61.905010	61.90501	61.905010
37	0.000000	0.0000	0.000000	107.5203	107.520294	107.52029	107.520294
38	0.288299	0.0000	0.532006	107.2856	106.997269	107.52029	107.231995
39	0.115915	0.0000	0.213902	107.2030	107.087067	107.23199	107.116074
40	0.057089	0.0000	0.105347	99.0871	99.029968	99.11607	99.058990
41	0.291828	0.0000	0.538518	98.8243	98.532440	99.05899	98.767151
42	0.086862	0.0000	0.160288	98.5019	98.415039	98.73662	98.649750
43	0.000000	0.0000	0.000000	98.6497	98.649750	98.64975	98.649750
44	0.000000	0.0000	0.000000	61.4214	61.421383	61.42138	61.421383
45	0.799188	0.0000	1.474764	61.1867	60.387478	61.42138	60.622196
46	0.431915	0.0000	0.797024	60.3569	59.925014	60.59165	60.159733
47	0.875316	0.0000	1.615245	54.9250	54.049702	55.15973	54.284420
48	1.646338	0.0000	3.038032	54.0314	52.385036	54.26609	52.619755
49	1.049040	0.0000	1.935821	52.3850	51.336002	52.61975	51.570721
50	1.317670	0.0000	2.431532	51.3177	50.000004	51.55239	50.234722
51	0.173723	0.0000	0.320577	18.1262	17.952518	18.36096	18.187237
52	2.744668	-3.2515	11.064810	2.6372	-0.107511	2.87188	0.127209
53	0.347447	0.0000	0.641153	-0.1381	-0.485501	0.09666	-0.250782
54	-0.445373	-0.5419	0.178141	-0.4435	0.001847	-0.44133	0.004043

CALCULATION SHEET

Project No. 079701.18.01	Calculation No. 079701.18.01-M-001	Rev. 0	Page No. 101 of 115
Title: Tank Side Cesium Removal Process System Flow Analysis			
Prepared By: JF Gallegos	Date: 7/22/19	Checked By: KW Dixon	Date: 7/22/19

AFT Fathom 9 (Output)
7/18/2019
Page 7

AFT Fathom Model

Pipe	dP Static Total (psid)	dP Gravity (psid)	dH (feet)	P Static In (psig)	P Static Out (psig)	P Stag. In (psig)	P Stag. Out (psig)
55	0.000000	0.0000	0.000000	120.4935	120.493515	120.49352	120.493515
56	0.000000	0.0000	0.000000	115.4870	115.486954	115.48695	115.486954
57	0.000000	0.0000	0.000000	115.4870	115.486954	115.48695	115.486954
58	0.000000	0.0000	0.000000	115.4870	115.486954	115.48695	115.486954
59	0.000000	0.0000	0.000000	115.4870	115.486954	115.48695	115.486954
60	0.000000	0.0000	0.000000	115.4870	115.486954	115.48695	115.486954
61	2.770457	0.0000	5.112399	110.4316	107.661163	110.66634	107.895889
62	2.341528	0.0000	4.320885	97.9539	95.612396	98.18864	95.847107
63	0.000000	0.0000	0.000000	110.6663	110.666336	110.66634	110.666336
64	0.000000	0.0000	0.000000	79.4982	79.498169	79.49817	79.498169
65	0.000000	0.0000	0.000000	79.9700	79.970016	79.97002	79.970016
66	0.000000	0.0000	0.000000	61.4214	61.421383	61.42138	61.421383
67	0.000000	0.0000	0.000000	79.1507	79.150726	79.15073	79.150726
68	0.000000	0.0000	0.000000	62.2525	62.252460	62.25246	62.252460
70	0.356836	0.0000	0.658479	61.5435	61.186665	61.77822	61.421383
71	0.096251	0.0000	0.177614	61.6703	61.574047	61.90501	61.808765
72	0.430570	0.0000	0.794542	98.4150	97.984467	98.64975	98.219177
89	0.345053	0.0000	0.636736	62.3628	62.017742	62.59752	62.252460
91	0.345053	0.0000	0.636736	107.6306	107.285568	107.86534	107.520294

All Junction Table

Jct	Name	P Static In (psig)	P Static Out (psig)	P Stag. In (psig)	P Stag. Out (psig)	Vol. Flow Rate Thru Jct (gal/min)	Mass Flow Rate Thru Jct (lbm/sec)	Loss Factor (K)
1	Pump AP-07F	-0.220691	188.086884	-0.216777	188.09081	61.389	10.6733	0.00000
4	Pump Discharge Nozzle	188.081635	187.795425	188.085556	188.08556	61.389	10.6733	0.00000
5	Branch	186.923416	186.882538	187.213547	187.21355	61.389	10.6733	0.00000
6	Branch	184.761124	184.761124	185.092133	185.09213	61.389	10.6733	0.00000
7		164.397324	163.882660	164.728333	164.67088	61.389	10.6733	0.17355
8	Branch	163.561127	163.561127	164.092697	164.09270	N/A	N/A	0.00000
9	Area Change	162.472397	162.802292	163.136566	163.08119	56.351	9.7974	0.08337
10	Branch	148.962967	148.962967	149.241867	149.24187	56.351	9.7974	0.00000
11	Orifice	148.157074	0.538107	148.435974	0.78257	56.351	9.7974	529.39990
12	AP-07F	0.000000	-0.244466	0.244466	0.00000	56.351	9.7974	1.00000
13	Branch	120.389191	120.389191	120.493515	120.49352	N/A	N/A	0.00000
14	Valve	119.913727	119.895401	120.148453	120.13013	5.000	0.8693	0.07807
15	Branch	119.453049	119.685852	119.687775	119.68777	5.000	0.8693	0.00000
16	Pre-Filter (WP-FLT-325A)	119.679718	116.652634	119.681641	116.68164	5.000	0.8693	1,558.73572
17	Branch	116.599350	116.393631	116.628357	116.62836	5.000	0.8693	0.00000
18	Valve	115.357422	115.339096	115.592148	115.57382	5.000	0.8693	0.07807

CALCULATION SHEET

Project No. 079701.18.01	Calculation No. 079701.18.01-M-001	Rev. 0	Page No. 102 of 115
Title: Tank Side Cesium Removal Process System Flow Analysis			
Prepared By: JF Gallegos	Date: 7/22/19	Checked By: KW Dixon	Date: 7/22/19

AFT Fathom 9 (Output)
7/18/2019
Page 8

AFT Fathom Model

Jct	Name	P Static In (psig)	P Static Out (psig)	P Stag. In (psig)	P Stag. Out (psig)	Vol. Flow Rate Thru Jct (gal/min)	Mass Flow Rate Thru Jct (lbm/sec)	Loss Factor (K)
19	Branch	115.382629	115.382629	115.486954	115.48695	N/A	N/A	0.00000
20	Branch	110.607666	110.607666	110.666336	110.66634	N/A	N/A	0.00000
X21	Valve	110.666336	95.847107	110.666336	95.84711	0.000	0.0000	0.00000
22	Branch	95.742798	95.742798	95.847107	95.84711	N/A	N/A	0.00000
23	Branch	95.410950	95.616653	95.645676	95.64568	5.000	0.8693	0.00000
24	Ion-Exchange Column (WP-IX-400A)	95.500748	80.500748	95.529755	80.52975	5.000	0.8693	516.99054
25	Branch	80.443649	80.237946	80.472672	80.47267	5.000	0.8693	0.00000
26	Branch	79.865692	79.865692	79.970016	79.97002	N/A	N/A	0.00000
27	Valve	79.639053	79.608505	79.873764	79.84322	5.000	0.8693	0.13013
28	Branch	79.393845	79.393845	79.498169	79.49817	N/A	N/A	0.00000
29	Branch	79.046402	79.046402	79.150726	79.15073	N/A	N/A	0.00000
30	Valve	78.570953	78.540405	78.805664	78.77513	5.000	0.8693	0.13013
31	Branch	78.165253	78.370956	78.399963	78.39996	5.000	0.8693	0.00000
32	Ion-Exchange Column (WP-IX-400B)	78.255035	63.255032	78.284042	63.28405	5.000	0.8693	516.99054
33	Branch	63.197948	62.992245	63.226963	63.22696	5.000	0.8693	0.00000
34	Valve	62.393337	62.362797	62.628056	62.59752	5.000	0.8693	0.13013
35	Branch	62.148144	62.148144	62.252460	62.25246	N/A	N/A	0.00000
36	Branch	61.800694	61.800694	61.905010	61.90501	N/A	N/A	0.00000
X37	Valve	61.905010	107.520294	61.905010	107.52029	0.000	0.0000	0.00000
38	Branch	107.415970	107.415970	107.520294	107.52029	N/A	N/A	0.00000
39	Branch	106.997269	107.202972	107.231995	107.23199	5.000	0.8693	0.00000
40	Ion-Exchange Column (WP-IX-400C)	107.087067	99.087067	107.116074	99.11607	5.000	0.8693	275.72827
41	Branch	99.029968	98.824265	99.058990	99.05899	5.000	0.8693	0.00000
42	WP-AOV-408C Fail Close	98.532440	98.501892	98.767151	98.73662	5.000	0.8693	0.13013
43	Branch	98.545441	98.545441	98.649750	98.64975	N/A	N/A	0.00000
X44	Valve	98.649750	61.421383	98.649750	61.42138	0.000	0.0000	0.00000
45	Branch	61.362705	61.362705	61.421383	61.42138	N/A	N/A	0.00000
46	Valve	60.387478	60.356930	60.622196	60.59165	5.000	0.8693	0.13013
47	Media Trap	59.925014	54.925014	60.159733	55.15973	5.000	0.8693	21.30202
48	Valve	54.049702	54.031376	54.284420	54.26609	5.000	0.8693	0.07807
49	Delay Tank	52.385036	52.385036	52.619755	52.61975	5.000	0.8693	0.00000
50	Valve	51.336002	51.317677	51.570721	51.55239	5.000	0.8693	0.07807
51	WP-PCV-557	50.000004	18.126244	50.234722	18.36096	5.000	0.8693	135.79512
52	Orifice	17.952518	2.637156	18.187237	2.87188	5.000	0.8693	65.24963
53	WP-AOV-560 Fail Close	-0.107511	-0.138055	0.127209	0.09666	5.000	0.8693	0.13013
54	Area Change	-0.485501	-0.443526	-0.250782	-0.44133	5.000	0.8693	0.81181
55	AP-106 Riser 2	0.001847	-0.002195	0.004043	0.00000	5.000	0.8693	1.84096
X56	Valve	120.493515	115.486954	120.493515	115.48695	0.000	0.0000	0.00000
57	Branch	115.486954	115.486954	115.486954	115.48695	0.000	0.0000	0.00000
58	Pre-Filter (WP-FLT-325B)	115.486954	115.486954	115.486954	115.48695	0.000	0.0000	0.00000

CALCULATION SHEET

Project No. 079701.18.01	Calculation No. 079701.18.01-M-001	Rev. 0	Page No. 103 of 115
Title: Tank Side Cesium Removal Process System Flow Analysis			
Prepared By: JF Gallegos	Date: 7/22/19	Checked By: KW Dixon	Date: 7/22/19

AFT Fathom 9 (Output)
7/18/2019
Page 9

AFT Fathom Model

Jct	Name	P Static In (psig)	P Static Out (psig)	P Stag. In (psig)	P Stag. Out (psig)	Vol. Flow Rate Thru Jct (gal/min)	Mass Flow Rate Thru Jct (lbm/sec)	Loss Factor (K)
59	Branch	115.486954	115.486954	115.486954	115.48695	0.000	0.0000	0.00000
60	Valve	115.486954	115.486954	115.486954	115.48695	0.000	0.0000	0.00000
X61	Valve	110.666336	79.498169	110.666336	79.49817	0.000	0.0000	0.00000
X62	Valve	79.970016	61.421383	79.970016	61.42138	0.000	0.0000	0.00000
X63	Valve	79.150726	62.252460	79.150726	62.25246	0.000	0.0000	0.00000
64	Valve	107.661163	107.630630	107.895889	107.86534	5.000	0.8693	0.13013
65	Valve	61.574047	61.543499	61.808765	61.77822	5.000	0.8693	0.13013
66	Valve	97.984467	97.953918	98.219177	98.18864	5.000	0.8693	0.13013
81	WP-FCV-306	163.729706	121.074951	163.964432	121.30968	5.000	0.8693	181.72650

Area Change Table

Area Change	Name	P Static In (psig)	P Static Out (psig)	P Stag. In (psig)	P Stag. Out (psig)	Vol. Flow Rate Thru Jct (gal/min)	Mass Flow Rate Thru Jct (lbm/sec)	Loss Factor (K)
7		164.397324	163.882660	164.728333	164.67088	61.389	10.6733	0.17355
9	Area Change	162.472397	162.802292	163.136566	163.08119	56.351	9.7974	0.08337
54	Area Change	-0.485501	-0.443526	-0.250782	-0.44133	5.000	0.8693	0.81181

Control Valve Table

Control Valve	Name	P Static In (psig)	P Static Out (psig)	P Stag. In (psig)	P Stag. Out (psig)	Vol. Flow Rate Thru Jct (gal/min)	Mass Flow Rate Thru Jct (lbm/sec)	Loss Factor (K)
51	WP-PCV-557	50.000004	18.126244	50.234722	18.36096	5.000	0.8693	135.79512
81	WP-FCV-306	163.729706	121.074951	163.964432	121.30968	5.000	0.8693	181.72650

General Component Table

General Component	Name	P Static In (psig)	P Static Out (psig)	P Stag. In (psig)	P Stag. Out (psig)	Vol. Flow Rate Thru Jct (gal/min)
16	Pre-Filter (WP-FLT-325A)	119.679718	116.652634	119.681641	116.68164	5.000
24	Ion-Exchange Column (WP-IX-400A)	95.500748	80.500748	95.529755	80.52975	5.000
32	Ion-Exchange Column (WP-IX-400B)	78.255035	63.255032	78.284042	63.28405	5.000
40	Ion-Exchange Column (WP-IX-400C)	107.087067	99.087067	107.116074	99.11607	5.000
47	Media Trap	59.925014	54.925014	60.159733	55.15973	5.000
49	Delay Tank	52.385036	52.385036	52.619755	52.61975	5.000
58	Pre-Filter (WP-FLT-325B)	115.486954	115.486954	115.486954	115.48695	0.000

CALCULATION SHEET

Project No. 079701.18.01	Calculation No. 079701.18.01-M-001	Rev. 0	Page No. 104 of 115
Title: Tank Side Cesium Removal Process System Flow Analysis			
Prepared By: JF Gallegos	Date: 7/22/19	Checked By: KW Dixon	Date: 7/22/19

AFT Fathom 9 (Output)
7/18/2019
Page 10

AFT Fathom Model

General Component	Mass Flow Rate Thru Jct (lbm/sec)	Loss Factor (K)
16	0.8693	1,558.73572
24	0.8693	516.99054
32	0.8693	516.99054
40	0.8693	275.72827
47	0.8693	21.30202
49	0.8693	0.00000
58	0.0000	0.00000

Orifice Table

Orifice	Name	P Static In (psig)	P Static Out (psig)	P Stag. In (psig)	P Stag. Out (psig)	Vol. Flow Rate Thru Jct (gal/min)	Mass Flow Rate Thru Jct (lbm/sec)	Loss Factor (K)
11	Orifice	148.157074	0.538107	148.435974	0.78257	56.351	9.7974	529.39990
52	Orifice	17.952518	2.637156	18.187237	2.87188	5.000	0.8693	65.24963

Pump Table

Pump	Name	P Static In (psig)	P Static Out (psig)	P Stag. In (psig)	P Stag. Out (psig)	Vol. Flow Rate Thru Jct (gal/min)	Mass Flow Rate Thru Jct (lbm/sec)	Loss Factor (K)
1	Pump AP-07F	-0.220691	188.086884	-0.216777	188.09081	61.389	10.6733	0.00000

Valve Table

Valve	Name	P Static In (psig)	P Static Out (psig)	P Stag. In (psig)	P Stag. Out (psig)	Vol. Flow Rate Thru Jct (gal/min)	Mass Flow Rate Thru Jct (lbm/sec)	Loss Factor (K)
14	Valve	119.913727	119.895401	120.148453	120.13013	5.000	0.8693	0.07807
18	Valve	115.357422	115.339096	115.592148	115.57382	5.000	0.8693	0.07807
X21	Valve	110.666336	95.847107	110.666336	95.84711	0.000	0.0000	0.00000
27	Valve	79.639053	79.608505	79.873764	79.84322	5.000	0.8693	0.13013
30	Valve	78.570953	78.540405	78.805664	78.77513	5.000	0.8693	0.13013
34	Valve	62.393337	62.362797	62.628056	62.59752	5.000	0.8693	0.13013
X37	Valve	61.905010	107.520294	61.905010	107.52029	0.000	0.0000	0.00000
42	WP-AOV-408C Fail Close	98.532440	98.501892	98.767151	98.73662	5.000	0.8693	0.13013
X44	Valve	98.649750	61.421383	98.649750	61.42138	0.000	0.0000	0.00000
46	Valve	60.387478	60.356930	60.622196	60.59165	5.000	0.8693	0.13013
48	Valve	54.049702	54.031376	54.284420	54.26609	5.000	0.8693	0.07807
50	Valve	51.336002	51.317677	51.570721	51.55239	5.000	0.8693	0.07807
53	WP-AOV-560 Fail Close	-0.107511	-0.138055	0.127209	0.09666	5.000	0.8693	0.13013
X56	Valve	120.493515	115.486954	120.493515	115.48695	0.000	0.0000	0.00000

CALCULATION SHEET

Project No. 079701.18.01	Calculation No. 079701.18.01-M-001	Rev. 0	Page No. 105 of 115
Title: Tank Side Cesium Removal Process System Flow Analysis			
Prepared By: JF Gallegos	Date: 7/22/19	Checked By: KW Dixon	Date: 7/22/19

AFT Fathom 9 (Output)
7/18/2019
Page 11

AFT Fathom Model

Valve	Name	P Static In (psig)	P Static Out (psig)	P Stag. In (psig)	P Stag. Out (psig)	Vol. Flow Rate Thru Jct (gal/min)	Mass Flow Rate Thru Jct (lbm/sec)	Loss Factor (K)
60	Valve	115.486954	115.486954	115.486954	115.48695	0.000	0.0000	0.00000
X61	Valve	110.666336	79.498169	110.666336	79.49817	0.000	0.0000	0.00000
X62	Valve	79.970016	61.421383	79.970016	61.42138	0.000	0.0000	0.00000
X63	Valve	79.150726	62.252460	79.150726	62.25246	0.000	0.0000	0.00000
64	Valve	107.661163	107.630630	107.895889	107.86534	5.000	0.8693	0.13013
65	Valve	61.574047	61.543499	61.808765	61.77822	5.000	0.8693	0.13013
66	Valve	97.984467	97.953918	98.219177	98.18864	5.000	0.8693	0.13013

CALCULATION SHEET

Project No. 079701.18.01	Calculation No. 079701.18.01-M-001	Rev. 0	Page No. 106 of 115
Title: Tank Side Cesium Removal Process System Flow Analysis			
Prepared By: JF Gallegos	Date: 7/22/19	Checked By: KW Dixon	Date: 7/22/19

ATTACHMENT 1

EMAIL TO DETERMINE DENSITY AND DYNAMIC VISCOSITY

CALCULATION SHEET

Project No. 079701.18.01	Calculation No. 079701.18.01-M-001	Rev. 0	Page No. 107 of 115
Title: Tank Side Cesium Removal Process System Flow Analysis			
Prepared By: JF Gallegos	Date: 7/22/19	Checked By: KW Dixon	Date: 7/22/19

From: Servin, Mario A
To: Paul Dorsh
Cc: Engeman, Jason K; John Gallegos
Subject: RE: TSCR Pump Sizing
Date: Thursday, October 18, 2018 6:27:00 AM

Paul,

See email below.

Mario A. Servin, PE
TFP Engineering
Washington River Protection Solutions, LLC
Contractor of the Department of Energy
Office: (509) 376-0676
Cell: (562) 335-1041

From: Wagnon, Todd J <todd_j_wagnon@rl.gov>
Sent: Wednesday, October 17, 2018 4:56 PM
To: Servin, Mario A <mario_a_servin@rl.gov>
Cc: Engeman, Jason K <jason_k_engeman@rl.gov>
Subject: RE: TSCR Pump Sizing

Mario,

For a design target the nominal values from Table 3.4 below are generally appropriate.

A better range for viscosity is 2 cP to 5 cP from RPP-RPT-60549. For density, based on the same information a nominal range is from 1.25 to 1.28.

Solids concentration should be considered from 160 ppm to 200 ppm as a nominal range.

Let me know if you have any questions
Todd

Todd Wagnon
Waste Feed Delivery Operations and Planning
2505 Garlick Rm 2332
Office: (509) 376-8406
Cell: (541) 908-2358
Washington River Protection Solutions

From: Servin, Mario A <mario_a_servin@rl.gov>
Sent: Wednesday, October 17, 2018 1:50 PM

CALCULATION SHEET

Project No. 079701.18.01	Calculation No. 079701.18.01-M-001	Rev. 0	Page No. 108 of 115
Title: Tank Side Cesium Removal Process System Flow Analysis			
Prepared By: JF Gallegos	Date: 7/22/19	Checked By: KW Dixon	Date: 7/22/19

To: Wagnon, Todd J <todd_j_wagnon@rl.gov>
Subject: FW: TSCR Pump Sizing

Todd,

See email chain below. ARES would like to close in on the properties of the supernatant range the pump most likely will be operating in to be able to size the pump better. Any thoughts?

Thanks,

Mario A. Servin, PE
TFP Engineering
Washington River Protection Solutions, LLC
Contractor of the Department of Energy
Office: (509) 376-0676
Cell: (562) 335-1041

From: Paul Dorsh <pdorsh@arescorporation.com>
Sent: Tuesday, October 16, 2018 6:54 AM
To: Servin, Mario A <mario_a_servin@rl.gov>; Engeman, Jason K <jason_k_engeman@rl.gov>
Cc: John Gallegos <jgallegos@arescorporation.com>
Subject: RE: TSCR Pump Sizing

That would certainly be closer, but I would think a range of supernatant is needed – and likely what TSCR would encounter. (We could use the high end of the range; then use the delta between the nominal value and the high end of the range to create a low end of supernatant as an initial test)…

Paul

From: Servin, Mario A <mario_a_servin@rl.gov>
Sent: Monday, October 15, 2018 3:51 PM
To: Paul Dorsh <pdorsh@arescorporation.com>; Engeman, Jason K <jason_k_engeman@rl.gov>
Cc: John Gallegos <jgallegos@arescorporation.com>
Subject: RE: TSCR Pump Sizing

Paul,

See table below, this from the TSCR spec, RPP-SPEC-61910. For sizing the pump would it make sense to use the nominal values that TSCR is using for their design?

CALCULATION SHEET

Project No. 079701.18.01	Calculation No. 079701.18.01-M-001	Rev. 0	Page No. 109 of 115
Title: Tank Side Cesium Removal Process System Flow Analysis			
Prepared By: JF Gallegos	Date: 7/22/19	Checked By: KW Dixon	Date: 7/22/19

Table 3-4. Double-Shell Tank Feed Physical Characteristics.

Parameter	Unit	Nominal Value	Range
Density[a]	g/mL	1.27	1.0 – 1.35
Viscosity[b]	cP	3.7	1 – 8
Solids Concentration[c]	ppm	160	0 – 15,000
Solids Particle Size[d]	µm	< 1	< 1 – 550
Waste Temperature[e]	°C	25	20 – 35
Surface Tension[f]	dynes/cm	80	70 – 100

[a] The upper bound value originates from TFC-ENG-STD-26, "Waste Transfer, Dilution, and Flushing Requirements," in which supernatant is defined as having a specific gravity of less than or equal to 1.35 and containing minimal solids.
[b] RPP-RPT-60549, "Supernatant Viscosity Assessment to Support Direct Feed Low Activity Waste Treatment."
[c] Tank-Side Cesium Removal system will be designed to make full throughput at the nominal solids content, but is not required to achieve throughput at the maximum solids content of 15,000 ppm (1.5 wt%).
[d] RPP-RPT-60670, "Solids Removal Requirements in the Direct Feed Low Activity Waste Process."
[e] WRPS-1705804, "Temperature Ranges for Direct Feed Low-Activity Waste Feed."
[f] The surface tension values originate from PNL-10173, *Ammonia in Simulated Hanford Double-Shell Tank Wastes: Solubility and Effect on Surface Tension.*

Mario

From: Paul Dorsh <pdorsh@arescorporation.com>
Sent: Monday, October 15, 2018 2:50 PM
To: Servin, Mario A <mario_a_servin@rl.gov>; Engeman, Jason K <jason_k_engeman@rl.gov>
Cc: John Gallegos <jgallegos@arescorporation.com>
Subject: TSCR Pump Sizing

Mario/Jason –

Is it possible for the project to better define the actual supernatant conditions that TSCR will be processing? Right now, we are consider a range from the worst case supernatant (1.37 SpG, 8cP) to water (1.0 SpG, 1 cP). Although the pump can obviously handle the water, using a better supernatant range (as opposed to the water) would likely result in much better control over the range that TSCR would actually see. If designing to this is possible, could you provide the information? I can send a formal RFI to capture any input changes. Thanks.

Paul

CALCULATION SHEET

Project No. 079701.18.01	Calculation No. 079701.18.01-M-001	Rev. 0	Page No. 110 of 115
Title: Tank Side Cesium Removal Process System Flow Analysis			
Prepared By: JF Gallegos	Date: 7/22/19	Checked By: KW Dixon	Date: 7/22/19

ATTACHMENT 2

CONTROL VALVE CUT SHEET

CALCULATION SHEET

Project No. 079701.18.01	Calculation No. 079701.18.01-M-001	Rev. 0	Page No. 111 of 115
Title: Tank Side Cesium Removal Process System Flow Analysis			
Prepared By: JF Gallegos	Date: 7/22/19	Checked By: KW Dixon	Date: 7/22/19

Flow-Tek®
A Subsidiary of BRAY INTERNATIONAL, Inc.

V-Control Ball Valve Selection Guide
Technical Bulletin No. 1006
Date: September 2008 / Pg. 3 of 6

V-CONTROL BALL VALVE FLOW COEFFICIENT C_V CHARTS

Full Port 1/2" to 4" Triad and 1/2" to 12" F15/3

		Percent and Angle of Ball Rotation										
Valve Size	V-Port Angle	0%	10%	20%	30%	40%	50%	60%	70%	80%	90%	100%
1/2"	15°	0	0.04	0.17	0.43	0.68	0.98	1.62	2.09	2.84	3.61	4.18
1/2"	30°	0	0.04	0.23	0.47	0.77	1.19	1.83	2.47	3.43	4.65	5.55
1/2"	60°	0	0.04	0.28	0.73	1.11	1.83	2.92	4.29	7.00	9.43	12.78
1/2"	90	0	0.06	0.47	0.85	1.28	2.05	3.24	4.74	8.26	11.61	14.72

Fl	0	0.96	0.95	0.94	0.93	0.92	0.90	0.89	0.86	0.82	0.75
Xt	0	0.98	0.77	0.71	0.67	0.64	0.63	0.62	0.55	0.43	0.40

Fl = Liquid Pressure Recovery Factor Xt= Pressure Drop Ratio Factor (Gas)

CALCULATION SHEET

Project No. 079701.18.01	Calculation No. 079701.18.01-M-001	Rev. 0	Page No. 112 of 115
Title: Tank Side Cesium Removal Process System Flow Analysis			
Prepared By: JF Gallegos	Date: 7/22/19	Checked By: KW Dixon	Date: 7/22/19

ATTACHMENT 3

CONTROL VALVE SIZING CALCULATION

CALCULATION SHEET

Project No. 079701.18.01	Calculation No. 079701.18.01-M-001	Rev. 0	Page No. 113 of 115
Title: Tank Side Cesium Removal Process System Flow Analysis			
Prepared By: JF Gallegos	Date: 7/22/19	Checked By: KW Dixon	Date: 7/22/19

Control Valve Sizing

$\Delta P_{maxL} = F_L^2 \cdot (P_1 - F_F \cdot P_V)$ Allowable sizing pressure drop for control valves without fittings (Control Valve Handbook, Pg. 115).

$F_F = 0.96 - 0.28\sqrt{\frac{P_V}{P_C}}$ Liquid critical pressure ratio factor (Control Valve Handbook, Pg. 115).

P_1 = "Upstream absolute static pressure"

P_2 = "Downstream absolute static pressure"

P_C = "Absolute thermodynamic critical pressure"

P_V = "Vapor pressure absolute of liquid at inlet temperature"

Flow Control Valve Sizing

$\Delta P_{306} := \begin{pmatrix} 104 \\ 43 \end{pmatrix} psi \quad \begin{pmatrix} \text{"Low Head Loss"} \\ \text{"High Head Loss"} \end{pmatrix}$ Calculated differential pressure across WP-FCV-306 for the high head loss and low head loss scenarios.

$P_1 := \begin{pmatrix} 187 \\ 164 \end{pmatrix} psi + 1atm = \begin{pmatrix} 201.7 \\ 178.7 \end{pmatrix} \cdot psi$ Upstream absolute static pressure of WP-FCV-306 for the high head loss and low head loss scenarios.

$P_2 := P_1 - \Delta P_{306} = \begin{pmatrix} 97.7 \\ 135.7 \end{pmatrix} \cdot psi$ Downstream absolute static pressure of WP-FCV-306 for the high head loss and low head loss scenarios.

$P_C := 3208 psi$ Absolute thermodynamic critical pressure (Control Valve Handbook, Pg 205).

$P_V := 7.520 psi$ Absolute vapor pressure at 180 °F (RPP-RPT-60603, Table 2-1). Although the fluid is expected to only reach 95 °F, the vapor pressure at 180 °F is bounding and used for this calculation.

$\%O_{306} := \begin{pmatrix} 35.0 \\ 45.9 \end{pmatrix} \%$ Percent open for the low head loss and high head loss scenarios (Fathom Model Output).

CALCULATION SHEET

Project No. 079701.18.01	Calculation No. 079701.18.01-M-001	Rev. 0	Page No. 114 of 115
Title: Tank Side Cesium Removal Process System Flow Analysis			
Prepared By: JF Gallegos	Date: 7/22/19	Checked By: KW Dixon	Date: 7/22/19

$$F_L(x) := \text{linterp}\left[\begin{pmatrix}0\\10\\20\\30\\40\\50\\60\\70\\80\\90\\100\end{pmatrix}\%, \begin{pmatrix}0\\0.96\\0.95\\0.94\\0.93\\0.92\\0.90\\0.89\\0.86\\0.82\\0.75\end{pmatrix}, x\right]$$

Linear inerpolation of the V-Control Valve liquid pressure recovery factor (Attachment 2).

$$F_F := 0.96 - 0.28 \cdot \sqrt{\frac{P_V}{P_C}} = 0.95$$

Liquid critical pressure ratio factor (Control Valve Handbook, Pg. 115) for high head loss and low head loss.

$$\Delta P_{maxL} := \left| \begin{array}{l} \text{for } i \in 0..1 \\ \quad xn_i \leftarrow F_L\left(\%O_{306_i}\right)^2 \cdot \left(P_{1_i} - F_F \cdot P_V\right) \\ xn \end{array} \right.$$

Allowable sizing pressure drop for control valves without fittings (Control Valve Handbook, Pg. 115) for high head loss and low head loss.

$$\Delta P_{maxL} = \begin{pmatrix}170\\147\end{pmatrix} \cdot psi$$

Calculated WP-FCV-306 allowable pressure drop.

$$Check_{306} := \left| \begin{array}{l} \text{for } i \in 0..1 \\ \quad xn_i \leftarrow \left| \begin{array}{l} \text{"Design OK"} \quad \text{if } \Delta P_{maxL_i} > \Delta P_{306_i} \\ \text{"Redesign"} \quad \text{otherwise} \end{array} \right. \\ xn \end{array} \right. = \begin{pmatrix}\text{"Design OK"}\\\text{"Design OK"}\end{pmatrix}$$

CALCULATION SHEET

Project No. 079701.18.01	Calculation No. 079701.18.01-M-001	Rev. 0	Page No. 115 of 115
Title: Tank Side Cesium Removal Process System Flow Analysis			
Prepared By: JF Gallegos	Date: 7/22/19	Checked By: KW Dixon	Date: 7/22/19

Pressure Control Valve Sizing

$$\Delta P_{557} := \begin{pmatrix} 31.9 \\ 32.4 \end{pmatrix} psi$$

Calculated differential pressure across WP-PCV-557 for the high head loss and low head loss scenarios.

$$\Delta P_{557} = \begin{pmatrix} 31.9 \\ 32.4 \end{pmatrix} \cdot psi \quad \begin{pmatrix} \text{"High Head Loss"} \\ \text{"Low Head Loss"} \end{pmatrix}$$

$$P_1 := \begin{pmatrix} 50 \\ 50 \end{pmatrix} psi + 1\,atm = \begin{pmatrix} 64.7 \\ 64.7 \end{pmatrix} \cdot psi$$

Upstream absolute static pressure of WP-PCV-557 for the high head loss and low head loss scenarios.

$$P_2 := P_1 - \Delta P_{557} = \begin{pmatrix} 32.796 \\ 32.296 \end{pmatrix} \cdot psi$$

Downstream absolute static pressure of WP-PCV-557 for the high head loss and low head loss scenarios.

$$\%O_{557} := \begin{pmatrix} 50.17 \\ 50.22 \end{pmatrix} \%$$

Percent open for the high head loss and low head loss scenarios (Fathom Model Output).

$$\Delta P_{maxL} := \left| \begin{array}{l} \text{for } i \in 0..1 \\ \quad xn_i \leftarrow F_L\left(\%O_{557_i}\right)^2 \cdot \left(P_{1_i} - F_F \cdot P_V\right) \\ xn \end{array} \right.$$

Allowable sizing pressure drop for control valves without fittings (Control Valve Handbook, Pg. 115) for high head loss and low head loss.

$$\Delta P_{maxL} = \begin{pmatrix} 49 \\ 49 \end{pmatrix} \cdot psi$$

Calculated WP-PCV-557 allowable pressure drop.

$$Check_{306} := \left| \begin{array}{l} \text{for } i \in 0..1 \\ \quad xn_i \leftarrow \left| \begin{array}{l} \text{"Design OK"} \quad \text{if } \Delta P_{maxL_i} > \Delta P_{557_i} \\ \text{"Redesign"} \quad \text{otherwise} \end{array} \right. \\ xn \end{array} \right. = \begin{pmatrix} \text{"Design OK"} \\ \text{"Design OK"} \end{pmatrix}$$