AVANTech
INCORPORATED

AVANTech COVER SHEET

CALCULATION ID NUMBER	RPP-CALC-62484
REVISION NUMBER	2
PROJECT NUMBER	18-13

JEREMIAH JOSEPH ROGERS
STATE OF WASHINGTON
48968
REGISTERED
PROFESSIONAL ENGINEER

8/28/19

TITLE	TSCR Delay Tank (POR655-WP-TK-550) Pressure Vessel Code, Nozzle Load, & Seismic Calculation

	Name	Initials	Date
Preparer	Calvin Hendrix	CS	8/28/19
Title	Engineering Manager		
Reviewer	Connor Shull	CS	8/28/19
Title	Engineer		
Approver	Jeremiah Rogers	JJR	8/28/19
Title	Sr. Engineering Specialist		

Revision Notes	0 – Initial Release 1 – Incorporated Design Changes for 100% 2 – Incorporated Design Changes

J.M.S. 8/28/19

TDB 28 AUG 19

CALCULATION REVIEW CHECKLIST

CALCULATION ID NUMBER	RPP-CALC-62484
REVISION NUMBER	2

	Item	Yes	N/A*
1.	Design Inputs such as design bases, regulatory requirements, codes, and standards are identified and documented, verified against customer specifications including edition and addenda.	✓	
2.	Effect of design package on compliance with the Safety Analysis Report or Certificate of Compliance identified and documented.		✓
3.	Revision numbers correct on the list of drawings?	✓	
4.	Assumptions reasonable?	✓	
5.	Appropriate analysis method used?	✓	
6.	Correct values used from drawings?	✓	
7.	Answers and units correct?	✓	
8.	Summary of results matches calculations?	✓	
9.	Material properties properly taken from credible references?	✓	
10.	Figures match design drawings?	✓	
11.	Computer input complete and properly identified?	✓	
12.	Documentation of all hand calculations attached?	✓	
13.	Reference to Verification / Validation for software?	✓	

* N/A, Explain	2. No SAR associated with this report.

	Name	Initials	Date
Reviewed	Connor Shull	CS	08/28/19

Table of Contents

1.0 PURPOSE **4**

2.0 REFERENCES **4**

3.0 DESIGN INPUTS **5**

4.0 DELAY TANK **8**

5.0 DELAY TANK HEAD & SHELL ANALYSIS: **10**

6.0 DELAY TANK NOZZLE ANALYSIS **16**

7.0 CONCLUSIONS **22**

ATTACHMENT 1 - DELAY TANK PRESSURE VESSEL ASME CODE, NOZZLE LOAD, & SEISMIC CALCULATION **24**

List of Figures

Figure 1: Delay Tank [Ref. 2.5/Ref. 2.8] 8
Figure 2: Delay Tank Top Head Design Input Values [Ref. 2.1 / Ref. 2.5] 10
Figure 3: Delay Tank Top Head Dimensions [Ref. 2.5] 11
Figure 4: Delay Tank Bottom Head Design Input Values [Ref. 2.1 / Ref. 2.5] 12
Figure 5: Delay Tank Bottom Head Dimensions [Ref. 2.5] 13
Figure 6: Delay Tank Shell Design Input Values [Ref. 2.1 / Ref 2.5] 14
Figure 7: Delay Tank Shell Dimensions [Ref. 2.5] 15
Figure 8: N1 (Inlet) Design Input Values [Ref. 2.5] 16
Figure 9: N1 (Inlet) Nozzle Load Design Inputs 17
Figure 10: Nozzle N1 (Inlet) Location [Ref. 2.5] 18
Figure 11: Nozzle N1 (Inlet) Weld Details [Ref. 2.5] 18
Figure 12: N2 (Outlet) Design Input Values [Ref. 2.5] 19
Figure 13: N2 (Outlet) Nozzle Load Design Inputs 20
Figure 14: N2 (Outlet) Location [Ref. 2.5] 21
Figure 15: N2 (Outlet) Weld Details [Ref. 2.5] 21

List of Tables

Table 1: Vessel Design Requirements [Ref. 2.1] 5
Table 2: Seismic Design Requirements 6
Table 3: Material Properties of 316 Stainless Steel [Ref. 2.4] 7
Table 4: Summary of Results for Delay Tank Top Head [Ref. 2.1 / Ref. 2.5] 11
Table 5: Summary of Results for Delay Tank Bottom Head [Ref. 2.1 / Ref. 2.5] 13
Table 6: Summary of Results for Delay Tank Shell [Ref. 2.1 / Ref. 2.5] 15

Table 7: Summary of Results for N1 (Inlet) [Ref. 2.1 / Ref. 2.5] 18
Table 8: Summary of Results for N2 (Outlet) [Ref. 2.1 / Ref. 2.5] 21
Table 9: Summary of Delay Tank Results 22

1.0 PURPOSE

1.1. DESIGN OBJECTIVE

AVANTech Inc. is required to design a Delay Tank (POR655-WP-TK-550) based on design guidelines from ASME Section VIII Rules for Construction of Pressure Vessels, Division 1, 2017 Edition [Ref. 2.3], WRC Bulletin 537 [Ref. 2.7], and ASCE 7-10 [Ref. 2.6]. However, this calculation only verifies that the Delay Tank has been designed in accordance with NDC-1 requirements and does not determine the actual anchor loads generated by the vessel. These anchor loads will be determined in another calculation [Ref. 2.13] to account for the additional lead shielding and to show the interaction between the vessel and the Process Enclosure. The Delay Tank will play a vital role in the overall scope of work for the TSCR system to filter solids and remove cesium from supernatant tank waste using non-elutable cesium ion-exchange media [Ref. 2.2 Section 1.0].

2.0 REFERENCES

2.1. DS-1813-02-Rev. 1, Delay Tank Data Sheet

2.2. RPP–SPEC-61910, Rev. 1, Specification for the Tank-Side Cesium Removal Demonstration Project (Project TD101)

2.3. ASME Section VIII Rules for Construction of Pressure Vessels, Division 1, 2017 Edition

2.4. ASME Section II Materials, Part D, 2017 Edition

2.5. H-14-111258-Rev. 1, Fabrication Drawing Delay Tank

2.6. ASCE 7-10 (2012), Minimum Design Loads for Buildings and Other Structures

2.7. WRC Bulletin 537 (2010), Precision Equations and Enhanced Diagrams for Local Stresses in Spherical and Cylindrical Shells Due to External Loadings for Implementation of WRC Bulletin 107

2.8. H-14-111252-Rev. 3, General Arrangement Delay Tank

2.9. ESC-COMPRESS-001-Rev. 0, COMPRESS 2018 Build 7820 Software Verification

2.10. TFC-ENG-STD-06, Rev D-0, Design Loads for Tank Farm Facilities

2.11. TFC-ENG-STD-22, Rev G-2, Piping, Jumpers, and Valves

2.12. 66749-001-RFI-005, Rev. 01, Update of Seismic Parameters from Soil Site Class C to Soil Site Class D

2.13. RPP-CALC-62464-Rev. 1, TSCR Process Enclosure Structural/Seismic Calculation and Lift Analysis

3.0 DESIGN INPUTS

3.1. DESIGN INPUTS:

The main design inputs used in the design of the Delay Tank are listed in Tables 1 and 2 below. These inputs will be applied with the use of COMPRESS 2018 Build 7820 pressure vessel design software to verify the design of the vessel. The seismic design inputs listed in Table 2 are to be used in the seismic analysis of the vessel. The analysis of the Delay Tank and its interaction with the Process Enclosure structural frame will be shown in RPP-CALC-62464 [Ref. 2.13].

Table 1: Vessel Design Requirements [Ref. 2.1]

Design Pressure @ Temperature - Internal	400 psig @ 180° F
Design Pressure @ Temperature - External	Full Vacuum psig @ 180°F
Specific Gravity of Process Liquid	1.27
Corrosion Allowance	0.2 mils per year [Ref. 2.11 Section 3.5.2.1]
Corrosion Allowance Design Life Value (5 years) [Ref. 2.2 Section 3.3.19.1]	0.0002 in. * 5 = 0.001 in.
Head Joint Efficiency	1.0
Shell Joint Efficiency	1.0
Design Liquid Level	100%

Table 2: Seismic Design Requirements

Site Class [Ref. 2.12]	D
Importance Factor, I_e [Ref. 2.6 Table 1.5-2]	1.5
Spectral Response Acceleration at Short Periods, S_s (%g) [Ref. 2.12]	73.5%
Spectral Response Acceleration at 1 second period, S_1 (%g) [Ref. 2.12]	17.3%
Response Modification Coefficient, R [Ref. 2.6 Table 15.4-2]	2
Long-period transition period, T_L [Ref. 2.6 Section 11.4.5]	16
Redundancy Factor, ρ [Ref. 2.6 Section 12.3.4]	1
Risk Category [Ref. 2.10 Table 5]	IV
Horizontal S_{D1} [Ref. 2.12] *Ref 2.12 states that the S_{D1} value shall be 0.244. However, COMPRESS Build 7820 uses an interpolated value for F_v and a rounded value for S_{M1} which leads to a slightly different value for S_{D1}.	0.243
Horizontal S_{DS} [Ref. 2.12]	0.594
Vertical S_{D1} [Ref. 2.12]	0.142
Vertical S_{DS} [Ref. 2.12]	0.419
NDC [Ref. 2.10 Table 5]	NDC-2
SDC [Ref. 2.10 Table 5]	SDC-2
Limit State [Ref. 2.10 Table 5]	C

3.1.1. All materials associated with the pressure containment portion of the Delay Tank are 316 S.S. plate or pipe. [Ref. 2.5]. The allowable stress values for 316 S.S. are listed in Table 3 below:

Table 3: Material Properties of 316 Stainless Steel [Ref. 2.4]

Item	Material Specification	Maximum Allowable Stress
316 S.S. Plate	ASME SA-240	20,000 psi [Ref. 2.4 Page 70 Line 39]
316 S.S. Pipe	ASME SA-312	20,000 [Ref. 2.4 Page 74 Line 1]

3.1.2. In order to determine how the seismic loads are transferred to the Delay Tank, the vessel must be fixed to a base for these forces to apply. Due to software limitations, the actual representation of the vessel skirt being welded to a plate located within the Process Enclosure will not apply. For this calculation, anchor bolts and a secondary base plate shall be utilized to show transfer of the seismic loads to the Delay Tank. The analysis of these reaction loads and their application to the base plate and structural members of the Process Enclosure will be shown in a separate calculation [Ref. 2.13]. The anchor bolts and secondary base plate serve no design purpose and are only used in the calculation to allow transfer of the seismic loads to the vessel. Their specification and description can be ignored in this analysis.

3.1.3. For full vacuum external design pressure, 15 psi will be the design pressure used.

3.1.4. The specific gravity of the test liquid during hydro-test shall be 1.

3.1.5. The vessel is designed with a corrosion allowance value but will be marked for “non-corrosive” service so that the applicable requirements from Section VIII will not apply.

3.1.6. A conservative approach will be taken for developing the nozzle load design forces and moments. The weight of the connecting piping after the nearest pipe support will be taken as the force and applied in all three directions relative to the nozzle. The moment of each nozzle shall be calculated as the distance between the closest connecting pipe support multiplied by the weight of the connecting piping.

3.1.7. Torsional moments shall be taken 0 lbf-in. for the nozzle load analysis.

3.2. COMPUTER SOFTWARE USED:

The vessel is being analyzed using “COMPRESS 2018 Build 7820” which follows the guidelines of ASME Section VIII Rules for Construction of Pressure Vessels, Division 1, 2017 Edition. The computer platform is Dell Precision 7520 and Windows 10 Professional is the operating system used to run the software. The software has been verified and validated to operate efficiently on this computer. This verification was done through a documented calculation (ESC-COMPRESS-001) showing the comparison of computer calculated values against those generated in ASME Section VIII Division 1 [Ref. 2.9]. This comparison was then checked by an independent reviewer to make sure the values were acceptable before proceeding forward on any ASME Section VIII Division 1 code calculations.

4.0 DELAY TANK

4.1. DELAY TANK BACKGROUND INFORMATION [REF. 2.2 SECTION 1.0]

The Delay Tank is a pressure containment unit that is a component of the Tank-Side Cesium Removal (TSCR) system. The TSCR system will be deployed as a phased demonstration project in the AP Tank Farm on the Hanford Site. The key project objective is to demonstrate a potentially low-cost, efficient tank-side treatment technology to filter solids and remove cesium from supernatant tank waste using non-elutable cesium ion-exchange media. The purpose of the Delay Tank in this system is to provide the time required for ^{137m}Ba to decay until it is in secular equilibrium with its parent radioisotope, which is ^{137}Cs. Once ^{137m}Ba and ^{137}Cs are in secular equilibrium, the concentration of ^{137}Cs can be accurately measured with the downstream online gamma radiation monitors. The figure below reflects the Delay Tank and baffle assembly.

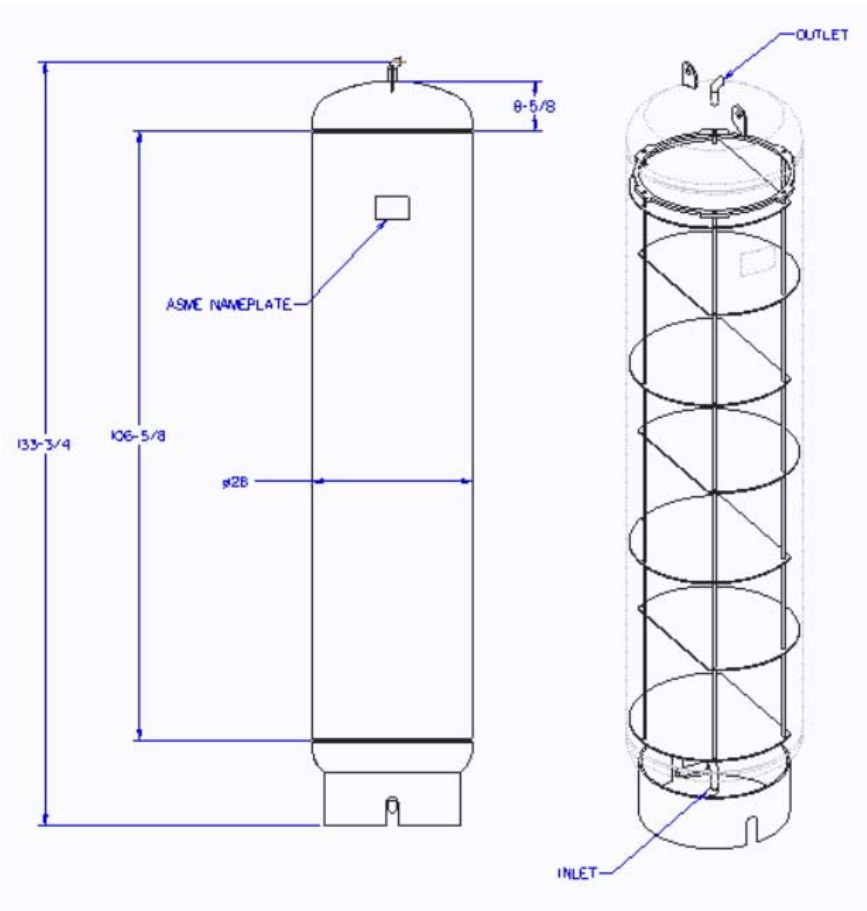

Figure 1: Delay Tank [Ref. 2.5/Ref. 2.8]

4.2. DELAY TANK CALCULATION METHODOLOGY

The Delay Tank will be analyzed by breaking down the components of the pressure containment unit into the following:

- Top Head
- Bottom Head
- Shell
- Nozzle N1 (Inlet)
- Nozzle N2 (Outlet)

Each component shall be analyzed against the required design criteria listed in ASME Section VIII [Ref. 2.3], ASCE 7-10 [Ref. 2.6], and WRC 537 [Ref. 2.7].

5.0 DELAY TANK HEAD & SHELL ANALYSIS:

5.1. DELAY TANK TOP HEAD

All mathematical calculations associated with the Delay Tank Top Head are detailed in Attachment 1 "Delay Tank Pressure Vessel ASME code, Nozzle Load, & Seismic Calculation". Figure 2 below shows the design inputs used for the analysis in Attachment 1. Figure 3 shows the dimensional information of the top head. The results from calculations performed in Attachment 1 are summarized in Table 4 and compared to the design values listed in the Delay Tank data sheet [Ref. 2.1].

Ellipsoidal Head #2

ASME Section VIII Division 1, 2017 Edition				
Component		Ellipsoidal Head		
Material		SA-240 316 (II-D p. 70, ln. 39)		
Attached To		Cylinder #1		
Impact Tested	Normalized	Fine Grain Practice	PWHT	Optimize MDMT/ Find MAWP
No	No	No	No	No
		Design Pressure (psi)	Design Temperature (°F)	Design MDMT (°F)
Internal		400	180	-20
External		15	180	
Static Liquid Head				
Condition		P_s (psi)	H_s (in)	SG
Operating		0.56	12.121	1.27
Test horizontal		0.99	27.375	1
Dimensions				
Outer Diameter		28"		
Head Ratio		2		
Minimum Thickness		0.3125"		
Corrosion	Inner	0.001"		
	Outer	0"		
Length L_{sf}		1.5"		
Nominal Thickness t_{sf}		0.375"		
Weight and Capacity				
		Weight (lb)[1]		Capacity (US gal)[1]
New		94.52		15.41
Corroded		94.23		15.42
Radiography				
Category A joints		Seamless No RT		
Head to shell seam		User Defined (E = 1)		

Figure 2: Delay Tank Top Head Design Input Values [Ref. 2.1 / Ref. 2.5]

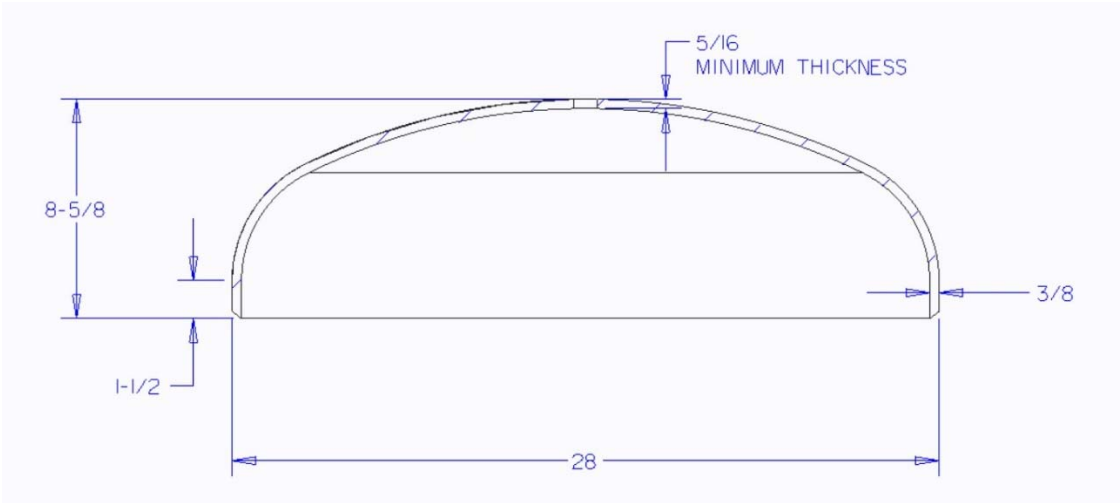

Figure 3: Delay Tank Top Head Dimensions [Ref. 2.5]

Table 4: Summary of Results for Delay Tank Top Head [Ref. 2.1 / Ref. 2.5]

Required Design Outputs	Calculated Value	Reference Section	Design Value
Design Thickness for Internal Pressure	0.2764”	Attachment 1 Page 15	0.3125”
Design Thickness for External Pressure	0.0743”	Attachment 1 Page 16	0.3125”
MAWP (Maximum Allowable Working Pressure)	453.58 psi	Attachment 1 Page 15	400 psi
MAEP (Maximum Allowable External Pressure)	136.72 psi	Attachment 1 Page 16	Full Vacuum

5.2. DELAY TANK BOTTOM HEAD

All mathematical calculations associated with the Delay Tank Bottom Head are detailed in Attachment 1 "Delay Tank Pressure Vessel ASME code, Nozzle Load, & Seismic Calculation". Figure 4 below shows the design inputs used for the analysis in Attachment 1. Figure 5 shows the dimensional information of the bottom head. The results from calculations performed in Attachment 1 are summarized in Table 5 and compared to the design values listed in the Delay Tank data sheet [Ref. 2.1].

Ellipsoidal Head #1

ASME Section VIII Division 1, 2017 Edition				
Component		Ellipsoidal Head		
Material		SA-240 316 (II-D p. 70, ln. 39)		
Attached To		Cylinder #1		
Impact Tested	Normalized	Fine Grain Practice	PWHT	Optimize MDMT/ Find MAWP
No	No	No	No	No
		Design Pressure (psi)	Design Temperature (°F)	Design MDMT (°F)
Internal		400	180	-20
External		15	180	
Static Liquid Head				
Condition		P_s (psi)	H_s (in)	SG
Operating		5.9	128.5908	1.27
Test horizontal		0.99	27.375	1
Dimensions				
Outer Diameter		28"		
Head Ratio		2		
Minimum Thickness		0.3125"		
Corrosion	Inner	0.001"		
	Outer	0"		
Length L_{sf}		1.5"		
Nominal Thickness t_{sf}		0.375"		
Weight and Capacity				
		Weight (lb)[1]		Capacity (US gal)[1]
New		94.52		15.41
Corroded		94.23		15.42
Radiography				
Category A joints		Seamless No RT		
Head to shell seam		User Defined (E = 1)		

Figure 4: Delay Tank Bottom Head Design Input Values [Ref. 2.1 / Ref. 2.5]

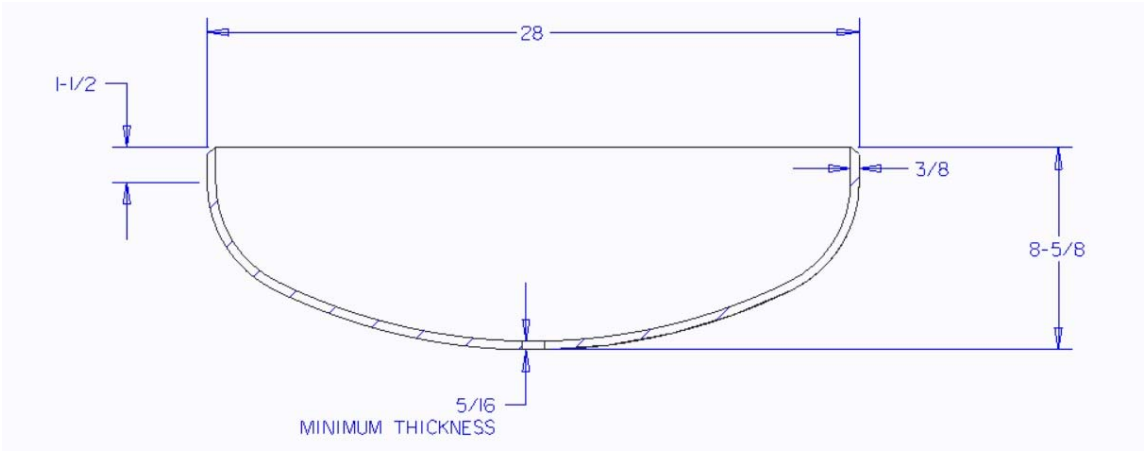

Figure 5: Delay Tank Bottom Head Dimensions [Ref. 2.5]

Table 5: Summary of Results for Delay Tank Bottom Head [Ref. 2.1 / Ref. 2.5]

Required Design Outputs	Calculated Value	Reference Section	Design Value
Design Thickness for Internal Pressure	0.28”	Attachment 1 Page 35	0.3125”
Design Thickness for External Pressure	0.0743”	Attachment 1 Page 36	0.3125”
MAWP	448.24 psi	Attachment 1 Page 35	400 psi
MAEP	136.72 psi	Attachment 1 Page 36	Full Vacuum

5.3. DELAY TANK SHELL

All mathematical calculations associated with the Delay Tank Shell are detailed in Attachment 1 "Delay Tank Pressure Vessel ASME code, Nozzle Load, & Seismic Calculation". Figure 6 below shows the design inputs used for the analysis in Attachment 1. Figure 7 shows the dimensional information of the shell. The results from calculations performed in Attachment 1 are summarized in Table 6 and compared to the design values listed in the Delay Tank data sheet [Ref. 2.1].

Cylinder #1

ASME Section VIII Division 1, 2017 Edition				
Component		Cylinder		
Material		SA-240 316 (II-D p. 70, ln. 39)		
Impact Tested	Normalized	Fine Grain Practice	PWHT	Optimize MDMT/ Find MAWP
No	No	No	No	No
		Design Pressure (psi)	Design Temperature (°F)	Design MDMT (°F)
Internal		400	180	-20
External		15	180	
Static Liquid Head				
Condition		P_s (psi)	H_s (in)	SG
Operating		5.51	120.246	1.27
Test horizontal		0.99	27.3125	1
Dimensions				
Outer Diameter		28"		
Length		106.625"		
Nominal Thickness		0.375"		
Corrosion	Inner	0.001"		
	Outer	0"		
Weight and Capacity				
		Weight (lb)		Capacity (US gal)
New		1,006.33		269.2
Corroded		1,003.68		269.24
Radiography				
Longitudinal seam		User Defined (E = 1)		
Top Circumferential seam		User Defined (E = 1)		
Bottom Circumferential seam		User Defined (E = 1)		

Figure 6: Delay Tank Shell Design Input Values [Ref. 2.1 / Ref 2.5]

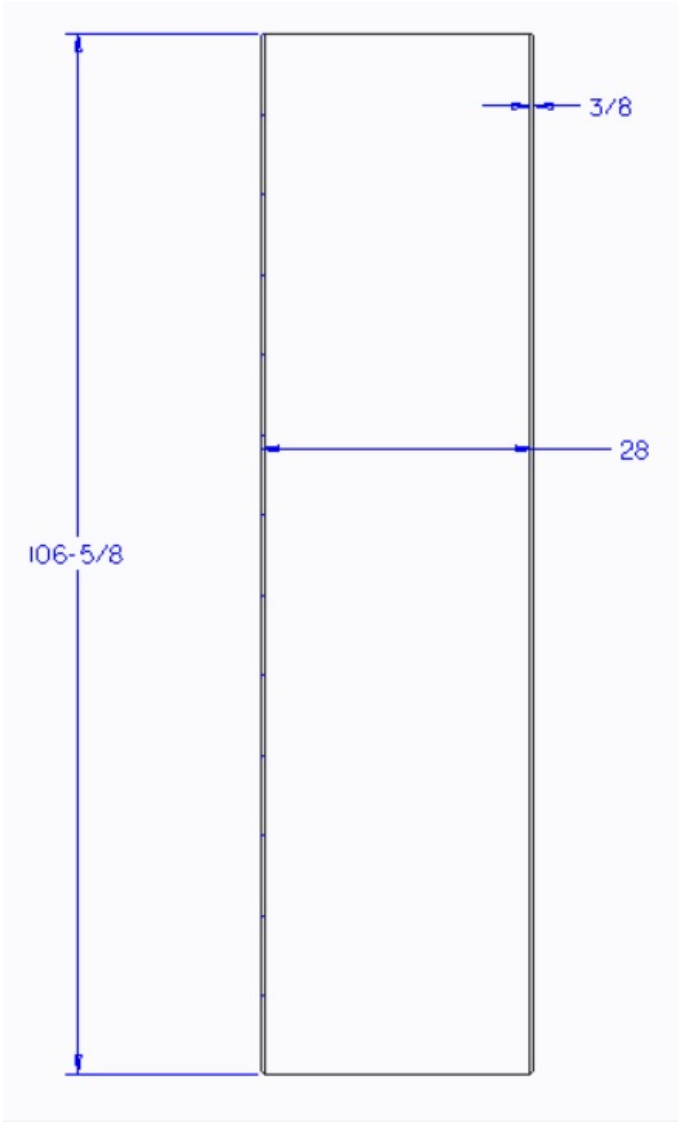

Figure 7: Delay Tank Shell Dimensions [Ref. 2.5]

Table 6: Summary of Results for Delay Tank Shell [Ref. 2.1 / Ref. 2.5]

Required Design Outputs	Calculated Value	Reference Section	Design Value
Design Thickness for Internal Pressure	0.2826”	Attachment 1 Page 26	0.375”
Design Thickness for External Pressure	0.1658”	Attachment 1 Page 26	0.375”
MAWP	534.54 psi	Attachment 1 Page 26	400 psi
MAEP	113.69 psi	Attachment 1 Page 27	Full Vacuum

6.0 DELAY TANK NOZZLE ANALYSIS

6.1. N1 (INLET)

All mathematical calculations associated with nozzle N1 (Inlet) of the Delay Tank are detailed in Attachment 1 "Delay Tank Pressure Vessel ASME code, Nozzle Load, & Seismic Calculation". Figures 8 and 9 below shows the design inputs used for the analysis in Attachment 1. Figure 10 shows the dimensional location of the nozzle on the Delay Tank top head. Figure 11 below shows the welding information for nozzle N1. The results from calculations performed in Attachment 1 are summarized in Table 7 and compared to the design values listed in the Delay Tank data sheet [Ref. 2.1].

ASME Section VIII Division 1, 2017 Edition

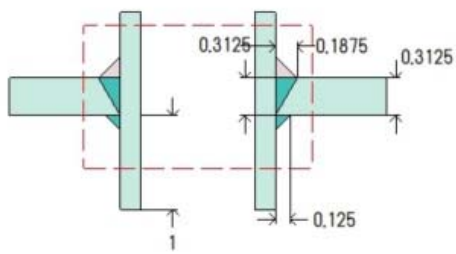

Note: round inside edges per UG-76(c)

Location and Orientation	
Located on	Ellipsoidal Head #1
Orientation	0°
End of nozzle to datum line	118.75"
Calculated as hillside	No
Distance to head center, R	0"
Passes through a Category A joint	No
Nozzle	
Description	NPS 1 Sch 80S (XS)
Access opening	No
Material specification	SA-312 TP316 Wld & smls pipe (II-D p. 74, ln. 1)
Inside diameter, new	0.957"
Pipe nominal wall thickness	0.179"
Pipe minimum wall thickness[1]	0.1566"
Corrosion allowance	0.001"
Projection available outside vessel, Lpr	3.4766"
Internal projection, h_{new}	1"
Local vessel minimum thickness	0.3125"
Liquid static head included	6.05 psi
Longitudinal joint efficiency	1
Welds	
Inner fillet, Leg_{41}	0.1875"
Lower fillet, Leg_{43}	0.125"
Nozzle to vessel groove weld	0.3125"

Figure 8: N1 (Inlet) Design Input Values [Ref. 2.5]

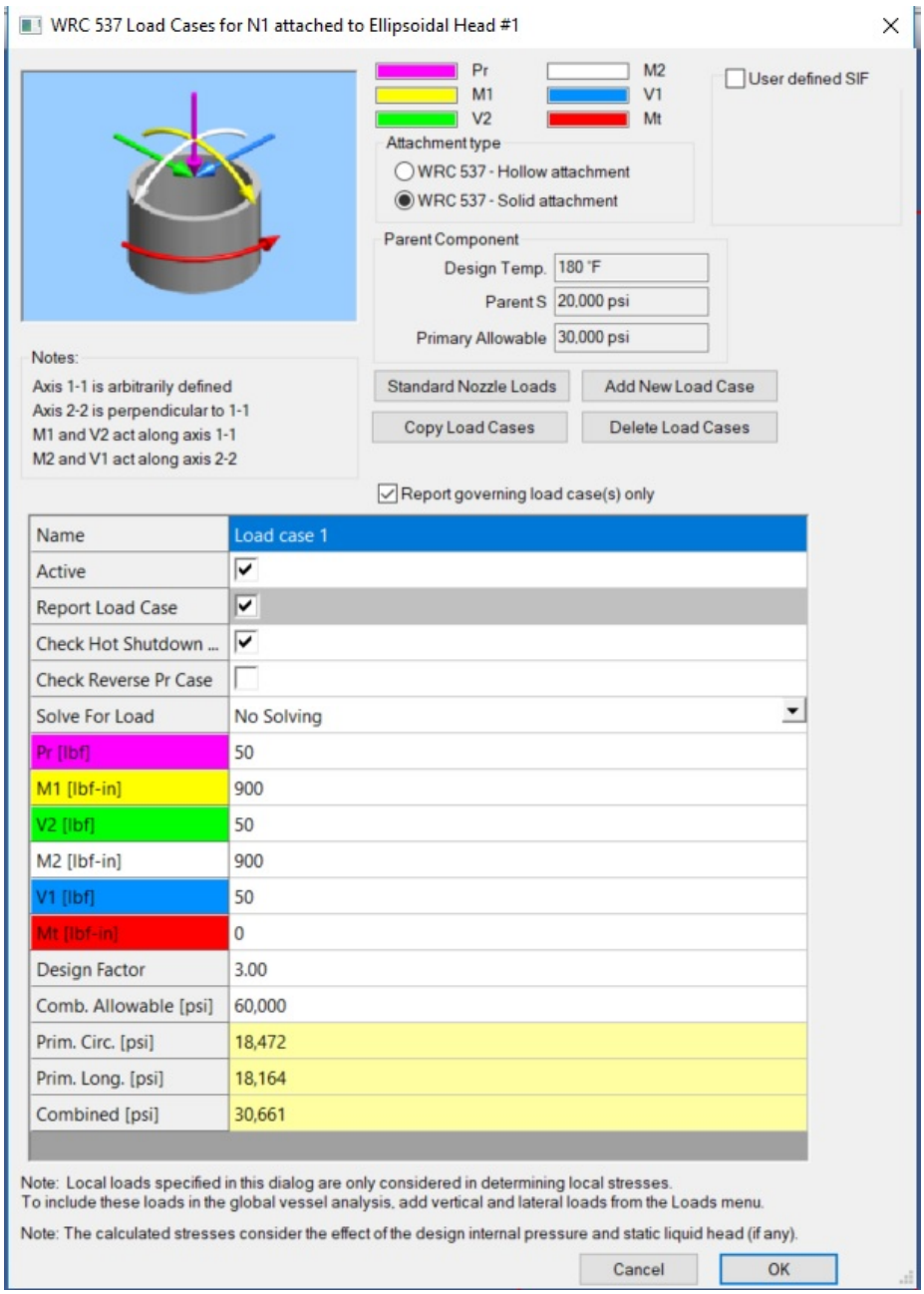

Figure 9: N1 (Inlet) Nozzle Load Design Inputs

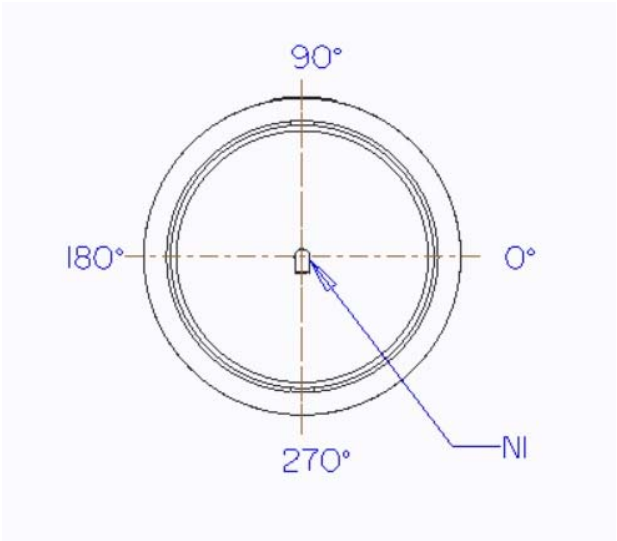

Figure 10: Nozzle N1 (Inlet) Location [Ref. 2.5]

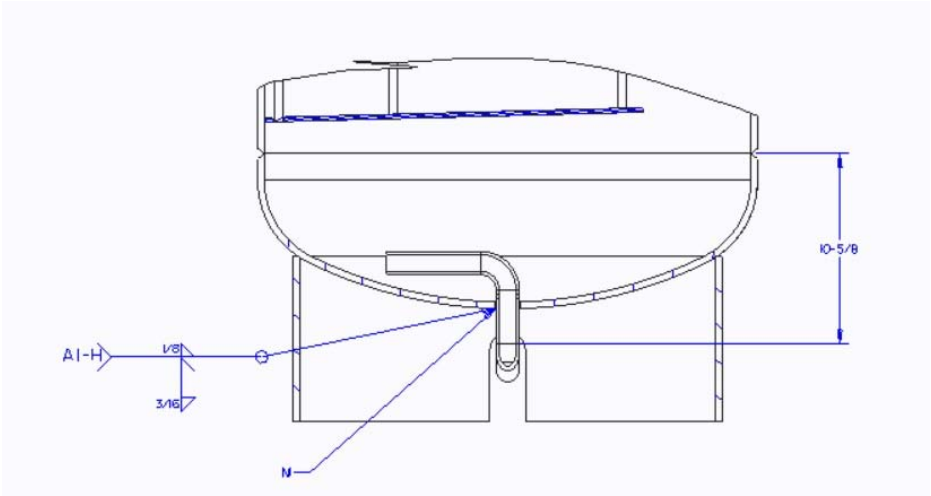

Figure 11: Nozzle N1 (Inlet) Weld Details [Ref. 2.5]

Table 7: Summary of Results for N1 (Inlet) [Ref. 2.1 / Ref. 2.5]

Required Design Outputs	Calculated Value	Reference Section	Design Value
Required Nozzle Neck Thickness per UG-45 [Ref. 2.3]	0.1174”	Attachment 1 Page 50	0.179”
Required Weld Size per UW-16 [Ref. 2.3]	0.1246”	Attachment 1 Page 49	t_c = 0.7*LEG t_c = 0.1313”
MAWP	493.38 psi	Attachment 1 Page 3	400 psi
MAEP	113.69 psi	Attachment 1 Page 3	Full Vacuum

6.2. N2 (OUTLET)

All mathematical calculations associated with nozzle N2 (Outlet) of the Delay Tank are detailed in Attachment 1 "Delay Tank Pressure Vessel ASME code, Nozzle Load, & Seismic Calculation". Figures 12 and 13 below shows the design inputs used for the analysis in Attachment 1. Figure 14 shows the dimensional location of the nozzle on the Delay Tank bottom head. Figure 15 below shows the welding information for nozzle N2. The results from calculations performed in Attachment 1 are summarized in Table 8 and compared to the design values listed in the Delay Tank data sheet [Ref. 2.1].

ASME Section VIII Division 1, 2017 Edition

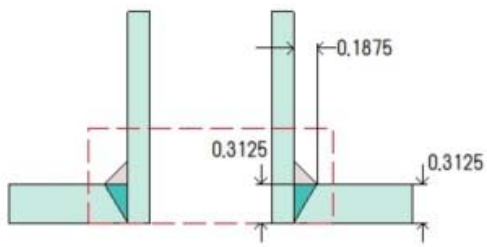

Note: round inside edges per UG-76(c)

Location and Orientation	
Located on	Ellipsoidal Head #2
Orientation	0°
End of nozzle to datum line	-12.125"
Calculated as hillside	No
Distance to head center, R	0"
Passes through a Category A joint	No
Nozzle	
Description	NPS 1 Sch 80S (XS)
Access opening	No
Material specification	SA-312 TP316 Wld & smls pipe (II-D p. 74, ln. 1)
Inside diameter, new	0.957"
Pipe nominal wall thickness	0.179"
Pipe minimum wall thickness[1]	0.1566"
Corrosion allowance	0.001"
Projection available outside vessel, Lpr	3.4766"
Local vessel minimum thickness	0.3125"
Liquid static head included	0.24 psi
Longitudinal joint efficiency	1
Welds	
Inner fillet, Leg_{41}	0.1875"
Nozzle to vessel groove weld	0.3125"

Figure 12: N2 (Outlet) Design Input Values [Ref. 2.5]

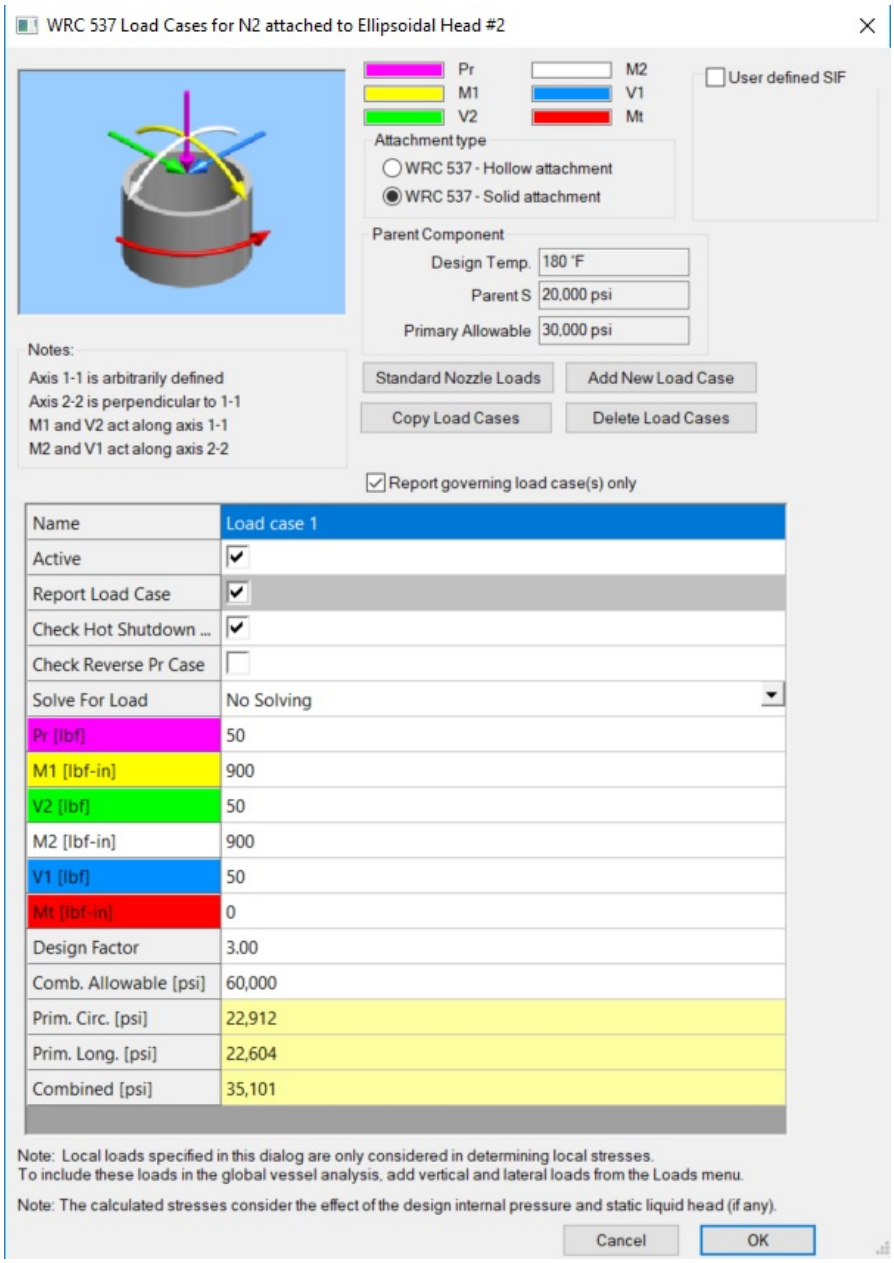

Figure 13: N2 (Outlet) Nozzle Load Design Inputs

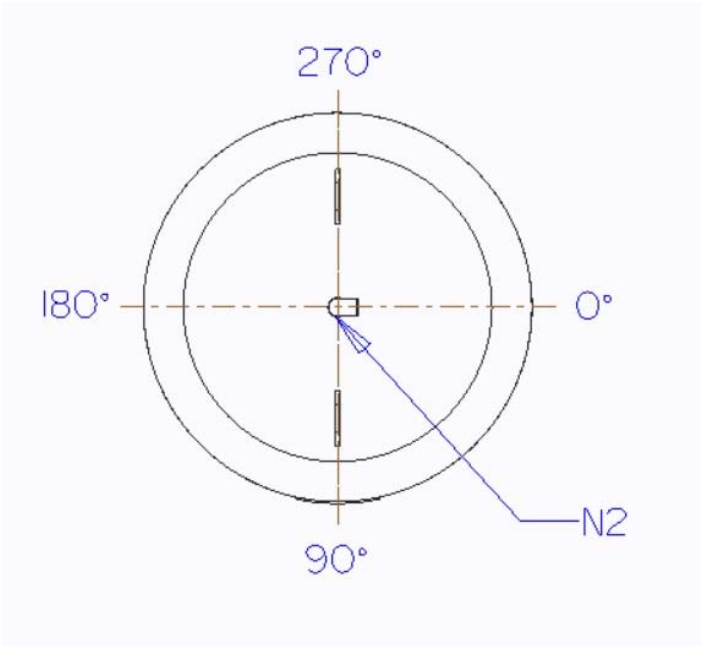

Figure 14: N2 (Outlet) Location [Ref. 2.5]

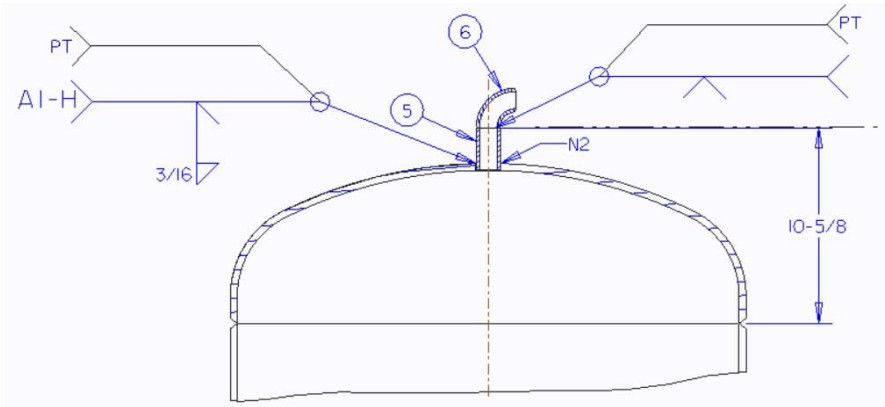

Figure 15: N2 (Outlet) Weld Details [Ref. 2.5]

Table 8: Summary of Results for N2 (Outlet) [Ref. 2.1 / Ref. 2.5]

Required Design Outputs	Calculated Value	Reference Section	Design Value
Required Nozzle Neck Thickness per UG-45 [Ref. 2.3]	0.1174”	Attachment 1 Page 76	0.179”
Required Weld Size per UW-16 [Ref. 2.3]	0.1246”	Attachment 1 Page 75	t_c = 0.7*LEG t_c = 0.1313”
MAWP	499.2 psi	Attachment 1 Page 3	400 psi
MAEP	113.69 psi	Attachment 1 Page 3	Full Vacuum

7.0 CONCLUSIONS

In conclusion, the required design outputs listed below have been calculated to verify that the ASME Section VIII Division 1, 2017 edition code requirements have been met. Table 9 below represents a summary of these calculated design outputs.

Table 9: Summary of Delay Tank Results

Required Design Outputs	Calculated Value	Reference Section	Design Value
Delay Tank Top Head Design Thickness for Internal Pressure	0.2764”	Attachment 1 Page 15	0.3125”
Delay Tank Top Head Design Thickness for External Pressure	0.0743”	Attachment 1 Page 16	0.3125”
Delay Tank Top Head MAWP	453.58 psi	Attachment 1 Page 15	400 psi
Delay Tank Top Head MAEP	136.72 psi	Attachment 1 Page 16	Full Vacuum
Delay Tank Bottom Head Design Thickness for Internal Pressure	0.28”	Attachment 1 Page 35	0.3125”
Delay Tank Bottom Head Design Thickness for External Pressure	0.0743”	Attachment 1 Page 36	0.3125”
Delay Tank Bottom Head MAWP	448.24 psi	Attachment 1 Page 35	400 psi
Delay Tank Bottom Head MAEP	136.72 psi	Attachment 1 Page 36	Full Vacuum
Delay Tank Shell Design Thickness for Internal Pressure	0.2826”	Attachment 1 Page 26	0.375”
Delay Tank Shell Design Thickness for External Pressure	0.1658”	Attachment 1 Page 26	0.375”
Delay Tank Shell MAWP	534.54 psi	Attachment 1 Page 26	400 psi
Delay Tank Shell MAEP	113.69 psi	Attachment 1 Page 27	Full Vacuum

Required Design Outputs	Calculated Value	Reference Section	Design Value
N1 (Inlet) Required Nozzle Neck Thickness per UG-45 [Ref. 2.2]	0.1174”	Attachment 1 Page 50	0.179”
N1 (Inlet) Required Weld Size per UW-16 ($t_1 + t_2$) [Ref. 2.2]	0.1246”	Attachment 1 Page 49	t_c = 0.7*LEG t_c = 0.1313”
N1 (Inlet) MAWP	493.38 psi	Attachment 1 Page 3	400 psi
N1 (Inlet) MAEP	113.69 psi	Attachment 1 Page 3	Full Vacuum
N2 (Outlet) Required Nozzle Neck Thickness per UG-45 [Ref. 2.2]	0.1174”	Attachment 1 Page 76	0.179”
N2 (Outlet) Required Weld Size per UW-16 [Ref. 2.2]	0.1246”	Attachment 1 Page 75	t_c = 0.7*LEG t_c = 0.1313”
N2 (Outlet) MAWP	499.2 psi	Attachment 1 Page 3	400 psi
N2 (Outlet) MAEP	113.69 psi	Attachment 1 Page 3	Full Vacuum
Vessel MAWP	448.24 psi	Attachment 1 Page 3	400 psi
Vessel MAEP	113.69 psi	Attachment 1 Page 3	Full Vacuum

ATTACHMENT 1 - DELAY TANK PRESSURE VESSEL ASME CODE, NOZZLE LOAD, & SEISMIC CALCULATION

AVANTech Inc.

2050 American Italian Way

Columbia, South Carolina 29209

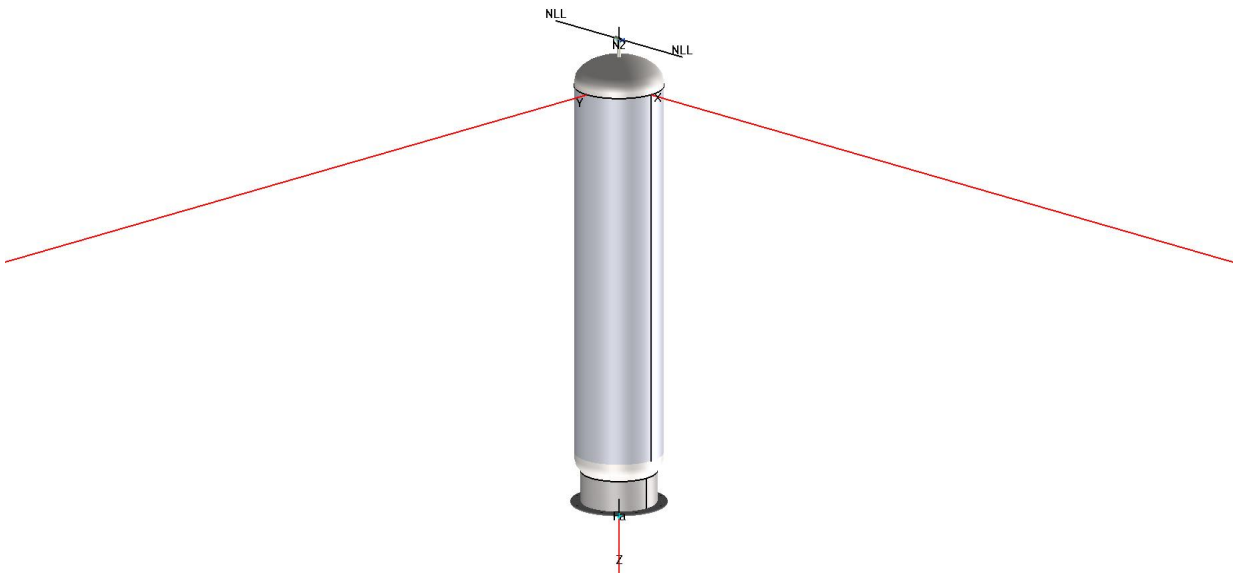

Pressure Vessel Code, Nozzle Load, & Seismic Calculation

Item:	Delay Tank
Vessel No:	POR655-WP-TK-550
Customer:	U.S. Department of Energy
Designer:	Calvin Hendrix
Date:	August 26th, 2019

Table of Contents

Nozzle Schedule....1/129

Nozzle Summary....2/129

Pressure Summary....3/129

Settings Summary....4/129

Radiography Summary....6/129

Thickness Summary....7/129

Weight Summary....8/129

Long Seam Summary....9/129

Hydrostatic Test....11/129

Vacuum Summary....12/129

Bill of Materials....13/129

Ellipsoidal Head #2....14/129

Straight Flange on Ellipsoidal Head #2....17/129

Cylinder #1....25/129

Ellipsoidal Head #1....34/129

Straight Flange on Ellipsoidal Head #1....37/129

Liquid Level bounded by Ellipsoidal Head #1....45/129

Inlet (N1)....46/129

Elbow (N1)....69/129

Outlet (N2)....72/129

Elbow (N2)....92/129

Seismic Code....95/129

Seismic Code for Buckling Check....99/129

Support Skirt #1....103/129

Skirt Base Ring #1....117/129

Baffle Assembly....128/129

Lateral Force #1....129/129

Nozzle Schedule

Specifications									
Nozzle mark	Identifier	Size	Materials		Impact Tested	Normalized	Fine Grain	Flange	Blind
N1	Inlet	NPS 1 Sch 80S (XS)	Nozzle	SA-312 TP316 Wld & smls pipe	No	No	No	N/A	No
	Elbow (N1)	NPS 1 Sch 80 (XS)	B16.9 Elbow	SA-403 316	No	No	No	N/A	No
N2	Outlet	NPS 1 Sch 80S (XS)	Nozzle	SA-312 TP316 Wld & smls pipe	No	No	No	N/A	No
	Elbow (N2)	NPS 1 Sch 80 (XS)	B16.9 Elbow	SA-403 316	No	No	No	N/A	No

Nozzle Summary

Dimensions												
Nozzle Identifier	OD (in)	t_n (in)	Req t_n (in)	A_1?	A_2?	Shell			Reinforcement Pad		Corr (in)	A_a/A_r (%)
						Nom t (in)	Design t (in)	User t (in)	Width (in)	t_{pad} (in)		
Inlet	1.315	0.179	0.1341	Yes	Yes	0.3125*	N/A		N/A	N/A	0.001	Exempt
Outlet	1.315	0.179	0.1341	Yes	Yes	0.3125*	N/A		N/A	N/A	0.001	Exempt
*Head minimum thickness after forming												

Definitions	
tn	Nozzle thickness
Req tn	Nozzle thickness required per UG-45/UG-16 Increased for pipe to account for 12.5% pipe thickness tolerance
Nom t	Vessel wall thickness
Design t	Required vessel wall thickness due to pressure + corrosion allowance per UG-37
User t	Local vessel wall thickness (near opening)
A_a	Area available per UG-37, governing condition
A_r	Area required per UG-37, governing condition
Corr	Corrosion allowance on nozzle wall

Pressure Summary

Component Summary									
Identifier	P Design (psi)	T Design (°F)	MAWP (psi)	MAP (psi)	MAEP (psi)	T_e external (°F)	MDMT (°F)	MDMT Exemption	Impact Tested
Ellipsoidal Head #2	400	180	453.58	455.58	136.72	180	-320	Note 1	No
Straight Flange on Ellipsoidal Head #2	400	180	539.43	541.52	113.69	180	-320	Note 2	No
Cylinder #1	400	180	534.54	541.52	113.69	180	-320	Note 2	No
Straight Flange on Ellipsoidal Head #1	400	180	534.48	541.52	113.69	180	-320	Note 2	No
Ellipsoidal Head #1	400	180	448.24	455.58	136.72	180	-320	Note 3	No
Inlet (N1)	400	180	493.38	501	113.69	180	-320	Note 4	No
Elbow (N1)	400	180	N/I	N/I	N/I	180	N/I	N/A	No
Outlet (N2)	400	180	499.2	501	113.69	180	-320	Note 5	No
Elbow (N2)	400	180	N/I	N/I	N/I	180	N/I	N/A	No

Chamber Summary	
Design MDMT	-20 °F
Rated MDMT	-320 °F @ 448.24 psi
MAWP hot & corroded	448.24 psi @ 180 °F
MAP cold & new	455.58 psi @ 70 °F
MAEP	113.69 psi @ 180 °F

Notes for MDMT Rating		
Note #	Exemption	Details
1.	Straight Flange governs MDMT	
2.	Rated MDMT per UHA-51(d)(1)(a), (carbon content does not exceed 0.10%) = -320°F	
3.	Straight Flange governs MDMT	
4.	Impact test exempt per UHA-51(g) (coincident ratio = 0.3424)	
5.	Impact test exempt per UHA-51(g) (coincident ratio = 0.3417)	

Settings Summary

COMPRESS 2018 Build 7820	
ASME Section VIII Division 1, 2017 Edition	
Units	U.S. Customary
Datum Line Location	0.00" from top seam
Vessel Design Mode	Design Mode
Minimum thickness	0.0625" per UG-16(b)
Design for cold shut down only	No
Design for lethal service (full radiography required)	No
Design nozzles for	Design P only
Corrosion weight loss	100% of theoretical loss
UG-23 Stress Increase	1.20
Skirt/legs stress increase	1.0
Minimum nozzle projection	0.5"
Juncture calculations for $\alpha > 30$ only	Yes
Preheat P-No 1 Materials > 1.25" and <= 1.50" thick	No
UG-37(a) shell tr calculation considers longitudinal stress	No
Cylindrical shells made from pipe are entered as minimum thickness	No
Nozzles made from pipe are entered as minimum thickness	No
ASME B16.9 fittings are entered as minimum thickness	No
Butt welds	Tapered per Figure UCS-66.3(a)
Disallow Appendix 1-5, 1-8 calculations under 15 psi	No
Hydro/Pneumatic Test	
Shop Hydrotest Pressure	1.3 times vessel MAWP [UG-99(b)]
Test liquid specific gravity	1.00
Maximum stress during test	90% of yield
Required Marking - UG-116	
UG-116(e) Radiography	RT1
UG-116(f) Postweld heat treatment	None
Code Cases\Interpretations	
Use Code Case 2547	No
Use Code Case 2695	No
Use Code Case 2901	No
Apply interpretation VIII-1-83-66	Yes

Apply interpretation VIII-1-86-175	Yes
Apply interpretation VIII-1-01-37	Yes
Apply interpretation VIII-1-01-150	Yes
Apply interpretation VIII-1-07-50	Yes
Apply interpretation VIII-1-16-85	Yes
No UCS-66.1 MDMT reduction	No
No UCS-68(c) MDMT reduction	No
Disallow UG-20(f) exemptions	No
UG-22 Loadings	
UG-22(a) Internal or External Design Pressure	Yes
UG-22(b) Weight of the vessel and normal contents under operating or test conditions	Yes
UG-22(c) Superimposed static reactions from weight of attached equipment (external loads)	Yes
UG-22(d)(2) Vessel supports such as lugs, rings, skirts, saddles and legs	Yes
UG-22(f) Wind reactions	No
UG-22(f) Seismic reactions	Yes
UG-22(j) Test pressure and coincident static head acting during the test:	No
Note: UG-22(b),(c) and (f) loads only considered when supports are present.	

License Information	
Company Name	AVANTech, Incorporated
License	Commercial
License Key ID	32845
Support Expires	March 28, 2020

Radiography Summary

UG-116 Radiography							
Component	Longitudinal Seam		Top Circumferential Seam		Bottom Circumferential Seam		Mark
	Category (Fig UW-3)	Radiography / Joint Type	Category (Fig UW-3)	Radiography / Joint Type	Category (Fig UW-3)	Radiography / Joint Type	
Ellipsoidal Head #2	N/A	Seamless No RT	N/A	N/A	B	User Defined (E = 1.00)	RT1
Cylinder #1	A	User Defined (E = 1.00)	B	User Defined (E = 1.00)	B	User Defined (E = 1.00)	RT1
Ellipsoidal Head #1	N/A	Seamless No RT	B	User Defined (E = 1.00)	N/A	N/A	RT1
Nozzle	**Longitudinal Seam**		**Nozzle to Vessel Circumferential Seam**		**Nozzle free end Circumferential Seam**		
Outlet (N2)	N/A	Seamless No RT	D	N/A / Type 7	B	UW-11(a)(4) exempt / Type 1	N/A
Inlet (N1)	N/A	Seamless No RT	D	N/A / Type 7	B	UW-11(a)(4) exempt / Type 1	N/A
UG-116(e) Required Marking: **RT1**							

Thickness Summary

Component Data								
Component Identifier	Material	Diameter (in)	Length (in)	Nominal t (in)	Design t (in)	Total Corrosion (in)	Joint E	Load
Ellipsoidal Head #2	SA-240 316	28 OD	7.1563	0.3125*	0.2764	0.001	1.00	Internal
Straight Flange on Ellipsoidal Head #2	SA-240 316	28 OD	1.5	0.375	0.2793	0.001	1.00	Internal
Cylinder #1	SA-240 316	28 OD	106.625	0.375	0.2826	0.001	1.00	Internal
Straight Flange on Ellipsoidal Head #1	SA-240 316	28 OD	1.5	0.375	0.2827	0.001	1.00	Internal
Ellipsoidal Head #1	SA-240 316	28 OD	7.1563	0.3125*	0.2801	0.001	1.00	Internal
Support Skirt #1	SA-312 TP316 Wld pipe	24 OD	9.25	0.375	0.0199	0	0.70	Seismic
*Head minimum thickness after forming								

Definitions	
Nominal t	Vessel wall nominal thickness
Design t	Required vessel thickness due to governing loading + corrosion
Joint E	Longitudinal seam joint efficiency
Load	
Internal	Circumferential stress due to internal pressure governs
External	External pressure governs
Wind	Combined longitudinal stress of pressure + weight + wind governs
Seismic	Combined longitudinal stress of pressure + weight + seismic governs

Weight Summary

Weight (lb) Contributed by Vessel Elements											
Component	Metal New*	Metal Corroded	Insulation	Insulation Supports	Lining	Piping + Liquid	Operating Liquid		Test Liquid		Surface Area ft^2
							New	Corroded	New	Corroded	
Ellipsoidal Head #2	94.5	94.2	0	0	0	0	163.4	163.4	128.7	128.7	8
Cylinder #1	1,006.3	1,003.7	0	0	0	0	2,850.7	2,851.2	2,244.7	2,245	65
Ellipsoidal Head #1	94.5	94.2	0	0	0	0	163.4	163.4	128.7	128.7	8
Support Skirt #1	70.6	70.6	0	0	0	0	0	0	0	0	10
Skirt Base Ring #1	64	64	0	0	0	0	0	0	0	0	7
TOTAL:	**1,330**	**1,326.8**	**0**	**0**	**0**	**0**	**3,177.5**	**3,178**	**2,502**	**2,502.4**	**97**

*Shells with attached nozzles have weight reduced by material cut out for opening.

Weight (lb) Contributed by Attachments											
Component	Body Flanges		Nozzles & Flanges		Packed Beds	Ladders & Platforms	Trays	Tray Supports	Rings & Clips	Vertical Loads	Surface Area ft^2
	New	Corroded	New	Corroded							
Ellipsoidal Head #2	0	0	1.1	1.1	0	0	0	0	0	0	0
Cylinder #1	0	0	0	0	0	0	0	0	0	300	0
Ellipsoidal Head #1	0	0	1.3	1.3	0	0	0	0	0	0	0
Support Skirt #1	0	0	0	0	0	0	0	0	0	0	0
TOTAL:	**0**	**0**	**2.5**	**2.4**	**0**	**0**	**0**	**0**	**0**	**300**	**0**

Vessel Totals		
	New	Corroded
Operating Weight (lb)	4,810	4,807
Empty Weight (lb)	1,632	1,629
Test Weight (lb)	4,134	4,132
Surface Area (ft^2)	97	-
Capacity** (US gal)	300	300

**The vessel capacity does not include volume of nozzle, piping or other attachments.

Vessel Lift Condition	
Vessel Lift Weight, New (lb)	1,632
Center of Gravity from Datum (in)	48.9178

Long Seam Summary

Shell Long Seam Angles	
Component	**Seam 1**
Cylinder #1	0°
Support Skirt #1	0°

Shell Plate Lengths		
Component	**Starting Angle**	**Plate 1**
Cylinder #1	0°	86.7865"
Support Skirt #1	0°	74.2201"

Notes
1) Plate Lengths use the circumference of the vessel based on the mid diameter of the components. 2) North is located at 0°

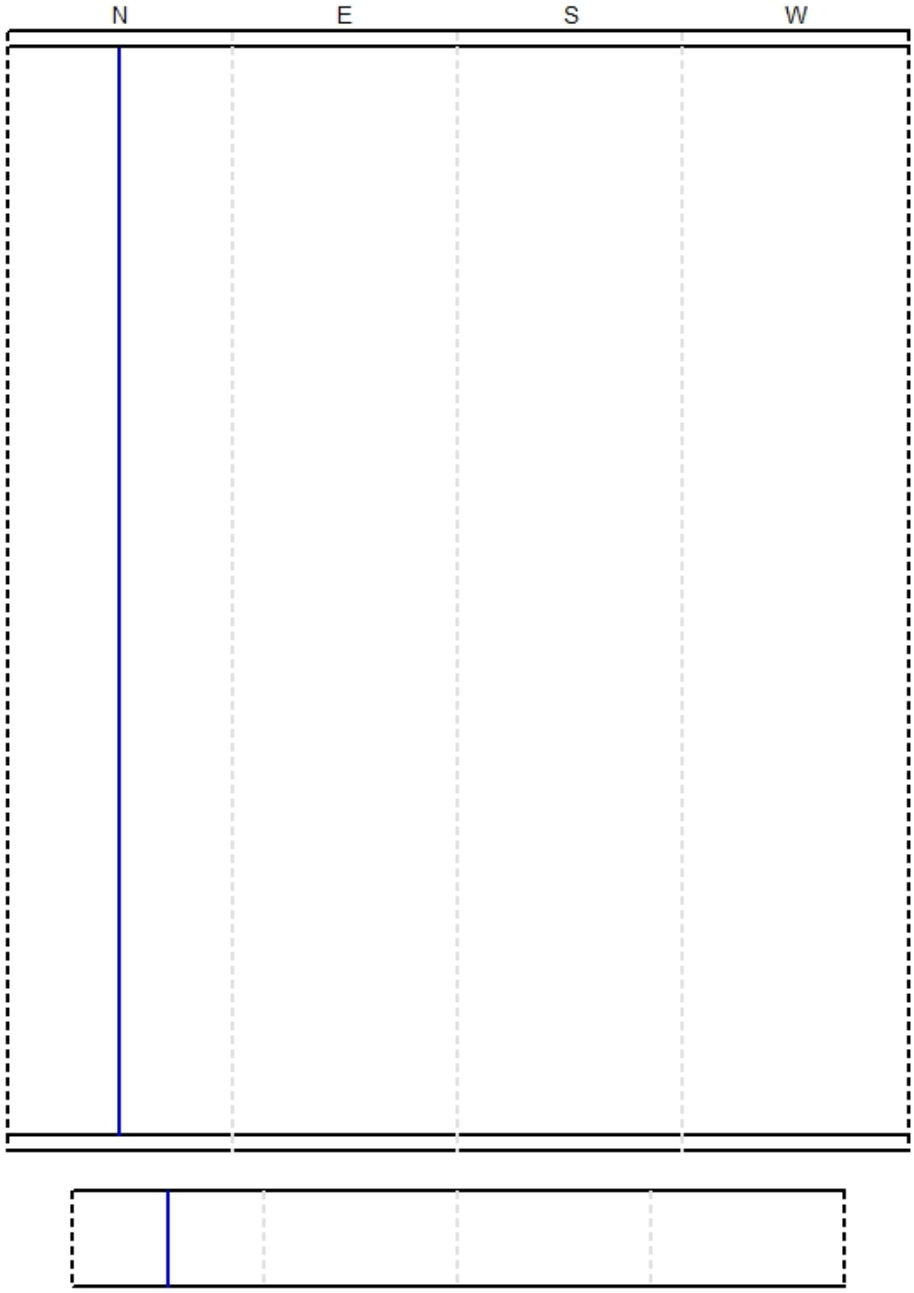

Shell Rollout

Hydrostatic Test

Horizontal shop hydrostatic test based on MAWP per UG-99(b)

Gauge pressure at 70°F = 1.3*MAWP*LSR
= 1.3*448.24*1
= 582.72 psi

Horizontal shop hydrostatic test				
Identifier	**Local test pressure (psi)**	**Test liquid static head (psi)**	**UG-99(b) stress ratio**	**UG-99(b) pressure factor**
Ellipsoidal Head #2 (1)	583.703	0.988	1	1.30
Straight Flange on Ellipsoidal Head #2	583.701	0.986	1	1.30
Cylinder #1	583.701	0.986	1	1.30
Straight Flange on Ellipsoidal Head #1	583.701	0.986	1	1.30
Ellipsoidal Head #1	583.703	0.988	1	1.30
Inlet (N1)	583.226	0.511	1	1.30
Outlet (N2)	583.226	0.511	1	1.30
(1) Ellipsoidal Head #2 limits the UG-99(b) stress ratio. (2) The zero degree angular position is assumed to be up, and the test liquid height is assumed to the top-most flange.				

The field test condition has not been investigated.

Vacuum Summary

Largest Unsupported Length Le			
Component	Line of Support	Elevation above Datum (in)	Length Le (in)
Ellipsoidal Head #2	-	-8.6563	N/A
-	1/3 depth of Ellipsoidal Head #2	-3.7816	N/A
Straight Flange on Ellipsoidal Head #2 Top	-	-1.5	114.1882
Straight Flange on Ellipsoidal Head #2 Bottom	-	0	114.1882
Cylinder #1 Top	-	0	114.1882
Cylinder #1 Bottom	-	106.625	114.1882
Straight Flange on Ellipsoidal Head #1 Top	-	106.625	114.1882
Straight Flange on Ellipsoidal Head #1 Bottom	-	108.125	114.1882
-	1/3 depth of Ellipsoidal Head #1	110.4066	N/A
Ellipsoidal Head #1	-	115.2813	N/A

Bill of Materials

Heads						
Item #	Type	Material	Thk [in]	Dia. [in]	Wt. [lb] (ea.)	Qty
H1	Ellipsoidal Head	SA-240 316	0.3125 (min.)	28 OD	94.6	2

Shells / Skirts							
Item #	Type	Material	Thk [in]	Dia. [in]	Length [in]	Wt. [lb] (ea.)	Qty
S1	Cylinder	SA-240 316	0.375	28 OD	106.6	1,006.3	1
S2	Support Skirt	SA-312 TP316 Wld pipe; NPS 24 Sch 40S (Std)	0.375	24 OD	8.8	70.6	1

Base Ring						
Item #	Type	Material	Thk [in]	Length [in]	Wt. [lb]	Qty
BR1	Base ring - single base plate	316 S.S.	0.5	76.5763	65	1

Nozzles							
Item #	Type	Material	NPS	Thk [in]	Dia. [in]	Length [in]	Wt. [lb]
Noz1	Nozzle	SA-312 TP316 Wld & smls pipe	NPS 1 Sch 80S (XS)	0.179	1.315 OD	8.6	1.6

ASME B16.9 Fittings				
Item #	Type	Material	Size [in]	Qty
EB1	B16.9 Elbow Long Radius	SA-403 316	NPS 1 Sch 80 (XS)	2

Fasteners				
Item #	Description	Material	Length [in]	Qty
SB1	1/2" coarse bolt	Base Ring bolt material	-	8

Ellipsoidal Head #2

ASME Section VIII Division 1, 2017 Edition				
Component		Ellipsoidal Head		
Material		SA-240 316 (II-D p. 70, ln. 39)		
Attached To		Cylinder #1		
Impact Tested	**Normalized**	**Fine Grain Practice**	**PWHT**	**Optimize MDMT/ Find MAWP**
No	No	No	No	No
		Design Pressure (psi)	**Design Temperature (°F)**	**Design MDMT (°F)**
Internal		400	180	-20
External		15	180	
Static Liquid Head				
Condition		**P_s (psi)**	**H_s (in)**	**SG**
Operating		0.56	12.121	1.27
Test horizontal		0.99	27.375	1
Dimensions				
Outer Diameter		28"		
Head Ratio		2		
Minimum Thickness		0.3125"		
Corrosion	**Inner**	0.001"		
	Outer	0"		
Length L_{sf}		1.5"		
Nominal Thickness t_{sf}		0.375"		
Weight and Capacity				
		Weight (lb)[1]		**Capacity (US gal)[1]**
New		94.52		15.41
Corroded		94.23		15.42
Radiography				
Category A joints		Seamless No RT		
Head to shell seam		User Defined (E = 1)		

[1] includes straight flange

Results Summary	
Governing condition	internal pressure
Minimum thickness per UG-16	0.0625" + 0.001" = 0.0635"
Design thickness due to internal pressure (t)	0.2764"
Design thickness due to external pressure (t_e)	0.0744"
Maximum allowable working pressure (MAWP)	453.58 psi
Maximum allowable pressure (MAP)	455.58 psi
Maximum allowable external pressure (MAEP)	136.72 psi
Straight Flange governs MDMT	-320°F

Factor K		
K = (1/6)*[2 + (D / (2*h))^2]		
Corroded	K = (1/6)*[2 + (27.377 / (2*6.8448))^2]	0.9999
New	K = (1/6)*[2 + (27.375 / (2*6.8438))^2]	1

Design thickness for internal pressure, (Corroded at 180 °F) Appendix 1-4(c)

t = $P*D_o*K / (2*S*E + 2*P*(K - 0.1))$ + Corrosion
= 400.56*28*0.999903 / (2*20,000*1 + 2*400.56*(0.999903 - 0.1)) + 0.001
= 0.2764"

Maximum allowable working pressure, (Corroded at 180 °F) Appendix 1-4(c)

P = $2*S*E*t / (K*D_o - 2*t*(K - 0.1)) - P_s$
= 2*20,000*1*0.3115 / (0.999903*28 - 2*0.3115*(0.999903 - 0.1)) - 0.56
= 453.58 psi

Maximum allowable pressure, (New at 70 °F) Appendix 1-4(c)

P = $2*S*E*t / (K*D_o - 2*t*(K - 0.1)) - P_s$
= 2*20,000*1*0.3125 / (1*28 - 2*0.3125*(1 - 0.1)) - 0
= 455.58 psi

Design thickness for external pressure, (Corroded at 180 °F) UG-33(d)

Equivalent outside spherical radius (R_o)
R_o = K_o*D_o
= 0.8803*28
= 24.6498 in

A = $0.125 / (R_o / t)$
= 0.125 / (24.6498 / 0.073349)
= 0.000372

From Table HA-2: B = 5,040.9142 psi

P_a = $B / (R_o / t)$
= 5,040.9142 / (24.6498 / 0.0733)
= 15 psi

t = 0.0733" + Corrosion = 0.0733" + 0.001" = 0.0743"
Check the external pressure per UG-33(a)(1) Appendix 1-4(c)

t = $1.67*P_e*D_o*K / (2*S*E + 2*1.67*P_e*(K - 0.1))$ + Corrosion
= 1.67*15*28*0.999903 / (2*20,000*1 + 2*1.67*15*(0.999903 - 0.1)) + 0.001
= 0.0185"

The head external pressure design thickness (t_e) is 0.0743".

Maximum Allowable External Pressure, (Corroded at 180 °F) UG-33(d)

Equivalent outside spherical radius (R_o)
R_o = K_o*D_o
= 0.8803*28
= 24.6498 in

A = $0.125 / (R_o / t)$
= 0.125 / (24.6498 / 0.3115)
= 0.00158

From Table HA-2: B = 10,818.69 psi

P_a = $B / (R_o / t)$
= 10,818.69 / (24.6498 / 0.3115)
= 136.7161 psi

Check the Maximum External Pressure, UG-33(a)(1) Appendix 1-4(c)

P = $2*S*E*t / ((K*D_o - 2*t*(K - 0.1))*1.67)$
= 2*20,000*1*0.3115 / ((0.999903*28 - 2*0.3115*(0.999903 - 0.1))*1.67)
= 271.94 psi

The maximum allowable external pressure (MAEP) is 136.72 psi.

% Forming strain - UHA-44(a)(2)

EFE = $(75*t / R_f)*(1 - R_f / R_o)$
= (75*0.375 / 4.8413)*(1 - 4.8413 / ∞)
= 5.8095%

Straight Flange on Ellipsoidal Head #2

ASME Section VIII Division 1, 2017 Edition				
Component		Cylinder		
Material		SA-240 316 (II-D p. 70, ln. 39)		
Impact Tested	**Normalized**	**Fine Grain Practice**	**PWHT**	**Optimize MDMT/ Find MAWP**
No	No	No	No	No
		Design Pressure (psi)	**Design Temperature (°F)**	**Design MDMT (°F)**
Internal		400	180	-20
External		15	180	
Static Liquid Head				
Condition		**P_s (psi)**	**H_s (in)**	**SG**
Operating		0.62	13.621	1.27
Test horizontal		0.99	27.3125	1
Dimensions				
Outer Diameter		28"		
Length		1.5"		
Nominal Thickness		0.375"		
Corrosion	**Inner**	0.001"		
	Outer	0"		
Weight and Capacity				
		Weight (lb)		**Capacity (US gal)**
New		14.16		3.79
Corroded		14.12		3.79
Radiography				
Longitudinal seam		Seamless No RT		
Bottom Circumferential seam		User Defined (E = 1)		

Results Summary	
Governing condition	Internal pressure
Minimum thickness per UG-16	0.0625" + 0.001" = 0.0635"
Design thickness due to internal pressure (t)	0.2793"
Design thickness due to external pressure (t_e)	0.1658"
Design thickness due to combined loadings + corrosion	0.1142"
Maximum allowable working pressure (MAWP)	539.43 psi
Maximum allowable pressure (MAP)	541.52 psi
Maximum allowable external pressure (MAEP)	113.69 psi
Rated MDMT	-320 °F

UHA-51 Material Toughness Requirements
Rated MDMT per UHA-51(d)(1)(a), (carbon content does not exceed 0.10%) = -320°F
Material is exempt from impact testing at the Design MDMT of -20°F.

Design thickness, (at 180 °F) Appendix 1-1

t = $P*R_o$ / (S*E + 0.40*P) + Corrosion
= 400.62*14 / (20,000*1.00 + 0.40*400.62) + 0.001
= 0.2793"

Maximum allowable working pressure, (at 180 °F) Appendix 1-1

P = S*E*t / (R_o - 0.40*t) - P_s
= 20,000*1.00*0.374 / (14 - 0.40*0.374) - 0.62
= 539.43 psi

Maximum allowable pressure, (at 70 °F) Appendix 1-1

P = S*E*t / (R_o - 0.40*t)
= 20,000*1.00*0.375 / (14 - 0.40*0.375)
= 541.52 psi

External Pressure, (Corroded & at 180 °F) UG-28(c)

L / D_o = 114.1882 / 28 = 4.0781
D_o / t = 28 / 0.1648 = 169.9152

From table G: A = 0.000142
From table HA-2: B = 1,911.5483 psi

P_a = 4*B / (3*(D_o / t))
= 4*1,911.55 / (3*(28 / 0.1648))
= 15 psi

Design thickness for external pressure P_a = 15 psi

t_a = t + Corrosion = 0.1648 + 0.001 = 0.1658"

Maximum Allowable External Pressure, (Corroded & at 180 °F) UG-28(c)

L / D_o = 114.1882 / 28 = 4.0781
D_o / t = 28 / 0.374 = 74.8663

From table G: A = 0.000470
From table HA-2: B = 6,383.7542 psi

P_a = 4*B / (3*(D_o / t))
= 4*6,383.75 / (3*(28 / 0.374))
= 113.69 psi

% Forming strain - UHA-44(a)(2)

EFE = (50*t / R_f)*(1 - R_f / R_o)
= (50*0.375 / 13.8125)*(1 - 13.8125 / ∞)
= 1.3575%

Thickness Required Due to Pressure + External Loads								
Condition	Pressure P (psi)	Allowable Stress Before UG-23 Stress Increase (psi)		Temperature (°F)	Corrosion C (in)	Load	Req'd Thk Due to Tension (in)	Req'd Thk Due to Compression (in)
		S_t	S_c					
Operating, Hot & Corroded	400	20,000	12,369	180	0.001	Seismic	0.1132	0.1131
Operating, Hot & New	400	20,000	12,373	180	0	Seismic	0.1132	0.1131
Hot Shut Down, Corroded	0	20,000	12,369	180	0.001	Seismic	0	0.0001
Hot Shut Down, New	0	20,000	12,373	180	0	Seismic	0	0.0001
Empty, Corroded	0	20,000	12,748	70	0.001	Seismic	0	0.0001
Empty, New	0	20,000	12,751	70	0	Seismic	0	0.0001
Vacuum	-15	20,000	12,369	180	0.001	Seismic	0.0069	0.007
Hot Shut Down, Corroded, Weight & Eccentric Moments Only	0	20,000	12,369	180	0.001	Weight	0.0001	0.0001

Allowable Compressive Stress, Hot and Corroded- S_{cHC}, (table HA-2)

A = 0.125 / (R_o / t)
= 0.125 / (14 / 0.374)
= 0.003339

B = 12,369 psi

S = 20,000 / 1.00 = 20,000 psi

S_{cHC} = min(B, S) = 12,369 psi

Allowable Compressive Stress, Hot and New- S_{cHN}, (table HA-2)

A = 0.125 / (R_o / t)
= 0.125 / (14 / 0.375)
= 0.003348

B = 12,373 psi

S = 20,000 / 1.00 = 20,000 psi

S_{cHN} = min(B, S) = 12,373 psi

Allowable Compressive Stress, Cold and New- S_{cCN}, (table HA-2)

A	=	0.125 / (R_o / t)
	=	0.125 / (14 / 0.375)
	=	0.003348
B	=	12,751 psi
S	=	20,000 / 1.00 = 20,000 psi
S_{cCN}	=	min(B, S) = 12,751 psi

Allowable Compressive Stress, Cold and Corroded- S_{cCC}, (table HA-2)

A	=	0.125 / (R_o / t)
	=	0.125 / (14 / 0.374)
	=	0.003339
B	=	12,748 psi
S	=	20,000 / 1.00 = 20,000 psi
S_{cCC}	=	min(B, S) = 12,748 psi

Allowable Compressive Stress, Vacuum and Corroded- S_{cVC}, (table HA-2)

A	=	0.125 / (R_o / t)
	=	0.125 / (14 / 0.374)
	=	0.003339
B	=	12,369 psi
S	=	20,000 / 1.00 = 20,000 psi
S_{cVC}	=	min(B, S) = 12,369 psi

Operating, Hot & Corroded, Seismic, Bottom Seam

t_p	=	$P*R / (2*S_t*K_s*E_c + 0.40*\|P\|)$	(Pressure)
	=	400*13.626 / (2*20,000*1.20*1.00 + 0.40*|400|)	
	=	0.1132"	
t_m	=	$M / (\pi*R_m^2*S_t*K_s*E_c)$	(bending)
	=	$323 / (\pi*13.813^2*20,000*1.20*1.00)$	
	=	0"	
t_w	=	$(0.6 - VAccel)*W / (2*\pi*R_m*S_t*K_s*E_c)$	(Weight)
	=	$0.40*95.4 / (2*\pi*13.813*20,000*1.20*1.00)$	
	=	0"	
t_t	=	$t_p + t_m - t_w$	(total required, tensile)
	=	0.1132 + 0 - (0)	
	=	0.1132"	
t_{wc}	=	$(1 + VAccel)*W / (2*\pi*R_m*S_t*K_s*E_c)$	(Weight)
	=	$1.20*95.4 / (2*\pi*13.813*20,000*1.20*1.00)$	
	=	0.0001"	
t_c	=	$\|t_{mc} + t_{wc} - t_{pc}\|$	(total, net tensile)
	=	|0 + (0.0001) - (0.1132)|	

= 0.1131"

Maximum allowable working pressure, Longitudinal Stress

$P = 2*S_t*K_s*E_c*(t - t_m + t_w) / (R - 0.40*(t - t_m + t_w))$
$= 2*20,000*1.20*1.00*(0.374 - 0 + (0)) / (13.626 - 0.40*(0.374 - 0 + (0)))$
= 1,332.09 psi

Operating, Hot & New, Seismic, Bottom Seam

t_p	=	$P*R / (2*S_t*K_s*E_c + 0.40*\|P\|)$	(Pressure)
	=	$400*13.625 / (2*20,000*1.20*1.00 + 0.40*\|400\|)$	
	=	0.1132"	
t_m	=	$M / (\pi*R_m^2*S_t*K_s*E_c)$	(bending)
	=	$323 / (\pi*13.8125^2*20,000*1.20*1.00)$	
	=	0"	
t_w	=	$(0.6 - VAccel)*W / (2*\pi*R_m*S_t*K_s*E_c)$	(Weight)
	=	$0.40*95.7 / (2*\pi*13.8125*20,000*1.20*1.00)$	
	=	0"	
t_t	=	$t_p + t_m - t_w$	(total required, tensile)
	=	0.1132 + 0 - (0)	
	=	0.1132"	
t_{wc}	=	$(1 + VAccel)*W / (2*\pi*R_m*S_t*K_s*E_c)$	(Weight)
	=	$1.20*95.7 / (2*\pi*13.8125*20,000*1.20*1.00)$	
	=	0.0001"	
t_c	=	$\|t_{mc} + t_{wc} - t_{pc}\|$	(total, net tensile)
	=	$\|0 + (0.0001) - (0.1132)\|$	
	=	0.1131"	

Maximum allowable working pressure, Longitudinal Stress

$P = 2*S_t*K_s*E_c*(t - t_m + t_w) / (R - 0.40*(t - t_m + t_w))$
$= 2*20,000*1.20*1.00*(0.375 - 0 + (0)) / (13.625 - 0.40*(0.375 - 0 + (0)))$
= 1,335.79 psi

Hot Shut Down, Corroded, Seismic, Bottom Seam

t_p	= 0"	(Pressure)
t_m	$= M / (\pi*R_m^2*S_t*K_s*E_c)$	(bending)
	$= 323 / (\pi*13.813^2*20,000*1.20*1.00)$	
	= 0"	
t_w	$= (0.6 - VAccel)*W / (2*\pi*R_m*S_t*K_s*E_c)$	(Weight)
	$= 0.40*95.4 / (2*\pi*13.813*20,000*1.20*1.00)$	
	= 0"	
t_t	$= t_p + t_m - t_w$	(total required, tensile)
	= 0 + 0 - (0)	

$= 0"$

$t_{mc} = M / (\pi*R_m^2*S_c*K_s)$ (bending)
$= 323 / (\pi*13.813^2*12,368.61*1.20)$
$= 0"$

$t_{wc} = (1 + VAccel)*W / (2*\pi*R_m*S_c*K_s)$ (Weight)
$= 1.20*95.4 / (2*\pi*13.813*12,368.61*1.20)$
$= 0.0001"$

$t_c = t_{mc} + t_{wc} - t_{pc}$ (total required, compressive)
$= 0 + (0.0001) - (0)$
$= 0.0001"$

Hot Shut Down, New, Seismic, Bottom Seam

$t_p = 0"$ (Pressure)
$t_m = M / (\pi*R_m^2*S_t*K_s*E_c)$ (bending)
$= 323 / (\pi*13.8125^2*20,000*1.20*1.00)$
$= 0"$

$t_w = (0.6 - VAccel)*W / (2*\pi*R_m*S_t*K_s*E_c)$ (Weight)
$= 0.40*95.7 / (2*\pi*13.8125*20,000*1.20*1.00)$
$= 0"$

$t_t = t_p + t_m - t_w$ (total required, tensile)
$= 0 + 0 - (0)$
$= 0"$

$t_{mc} = M / (\pi*R_m^2*S_c*K_s)$ (bending)
$= 323 / (\pi*13.8125^2*12,372.58*1.20)$
$= 0"$

$t_{wc} = (1 + VAccel)*W / (2*\pi*R_m*S_c*K_s)$ (Weight)
$= 1.20*95.7 / (2*\pi*13.8125*12,372.58*1.20)$
$= 0.0001"$

$t_c = t_{mc} + t_{wc} - t_{pc}$ (total required, compressive)
$= 0 + (0.0001) - (0)$
$= 0.0001"$

Empty, Corroded, Seismic, Bottom Seam

$t_p = 0"$ (Pressure)
$t_m = M / (\pi*R_m^2*S_c*K_s)$ (bending)
$= 137 / (\pi*13.813^2*12,747.52*1.20)$
$= 0"$

$t_w = (0.6 - VAccel)*W / (2*\pi*R_m*S_c*K_s)$ (Weight)
$= 0.40*95.4 / (2*\pi*13.813*12,747.52*1.20)$
$= 0"$

$t_t = |t_p + t_m - t_w|$ (total, net compressive)
$= |0 + 0 - (0)|$
$= 0"$

$t_{wc} = (1 + VAccel)*W / (2*\pi*R_m*S_c*K_s)$ (Weight)

$= 1.20*95.4 / (2*\pi*13.813*12{,}747.52*1.20)$
$= 0.0001"$

$t_c = t_{mc} + t_{wc} - t_{pc}$ (total required, compressive)
$= 0 + (0.0001) - (0)$
$= \underline{0.0001"}$

Empty, New, Seismic, Bottom Seam

$t_p = 0"$ (Pressure)
$t_m = M / (\pi*R_m^2*S_c*K_s)$ (bending)
$= 138 / (\pi*13.8125^2*12{,}751.22*1.20)$
$= 0"$

$t_w = (0.6 - VAccel)*W / (2*\pi*R_m*S_c*K_s)$ (Weight)
$= 0.40*95.7 / (2*\pi*13.8125*12{,}751.22*1.20)$
$= 0"$

$t_t = |t_p + t_m - t_w|$ (total, net compressive)
$= |0 + 0 - (0)|$
$= \underline{0"}$

$t_{wc} = (1 + VAccel)*W / (2*\pi*R_m*S_c*K_s)$ (Weight)
$= 1.20*95.7 / (2*\pi*13.8125*12{,}751.22*1.20)$
$= 0.0001"$

$t_c = t_{mc} + t_{wc} - t_{pc}$ (total required, compressive)
$= 0 + (0.0001) - (0)$
$= \underline{0.0001"}$

Vacuum, Seismic, Bottom Seam

$t_p = P*R / (2*S_c*K_s + 0.40*|P|)$ (Pressure)
$= -15*13.626 / (2*12{,}368.61*1.20 + 0.40*|15|)$
$= -0.0069"$

$t_m = M / (\pi*R_m^2*S_c*K_s)$ (bending)
$= 323 / (\pi*13.813^2*12{,}368.61*1.20)$
$= 0"$

$t_w = (0.6 - VAccel)*W / (2*\pi*R_m*S_c*K_s)$ (Weight)
$= 0.40*95.4 / (2*\pi*13.813*12{,}368.61*1.20)$
$= 0"$

$t_t = |t_p + t_m - t_w|$ (total, net compressive)
$= |-0.0069 + 0 - (0)|$
$= \underline{0.0069"}$

$t_{wc} = (1 + VAccel)*W / (2*\pi*R_m*S_c*K_s)$ (Weight)
$= 1.20*95.4 / (2*\pi*13.813*12{,}368.61*1.20)$
$= 0.0001"$

$t_c = t_{mc} + t_{wc} - t_{pc}$ (total required, compressive)
$= 0 + (0.0001) - (-0.0069)$
$= \underline{0.007"}$

Maximum Allowable External Pressure, Longitudinal Stress

$P = 2*S_c*K_s*(t - t_{mc} - t_{wc}) / (R - 0.40*(t - t_{mc} - t_{wc}))$
$= 2*12{,}368.61*1.20*(0.374 - 0 - 0.0001) / (13.626 - 0.40*(0.374 - 0 - 0.0001))$
$= 823.54$ psi

Hot Shut Down, Corroded, Weight & Eccentric Moments Only, Bottom Seam

$t_p = 0"$ (Pressure)

$t_m = M / (\pi*R_m^2*S_c*K_s)$ (bending)
$= 0 / (\pi*13.813^2*12{,}368.61*1.00)$
$= 0"$

$t_w = W / (2*\pi*R_m*S_c*K_s)$ (Weight)
$= 95.4 / (2*\pi*13.813*12{,}368.61*1.00)$
$= 0.0001"$

$t_t = |t_p + t_m - t_w|$ (total, net compressive)
$= |0 + 0 - (0.0001)|$
$= 0.0001"$

$t_c = t_{mc} + t_{wc} - t_{pc}$ (total required, compressive)
$= 0 + (0.0001) - (0)$
$= 0.0001"$

Cylinder #1

ASME Section VIII Division 1, 2017 Edition				
Component		Cylinder		
Material		SA-240 316 (II-D p. 70, ln. 39)		
Impact Tested	**Normalized**	**Fine Grain Practice**	**PWHT**	**Optimize MDMT/ Find MAWP**
No	No	No	No	No
		Design Pressure (psi)	**Design Temperature (°F)**	**Design MDMT (°F)**
Internal		400	180	-20
External		15	180	
Static Liquid Head				
Condition		**P_s (psi)**	**H_s (in)**	**SG**
Operating		5.51	120.246	1.27
Test horizontal		0.99	27.3125	1
Dimensions				
Outer Diameter		28"		
Length		106.625"		
Nominal Thickness		0.375"		
Corrosion	**Inner**	0.001"		
	Outer	0"		
Weight and Capacity				
		Weight (lb)		**Capacity (US gal)**
New		1,006.33		269.2
Corroded		1,003.68		269.24
Radiography				
Longitudinal seam		User Defined (E = 1)		
Top Circumferential seam		User Defined (E = 1)		
Bottom Circumferential seam		User Defined (E = 1)		

Results Summary	
Governing condition	Internal pressure
Minimum thickness per UG-16	0.0625" + 0.001" = 0.0635"
Design thickness due to internal pressure (t)	0.2826"
Design thickness due to external pressure (t_e)	0.1658"
Design thickness due to combined loadings + corrosion	0.1186"
Maximum allowable working pressure (MAWP)	534.54 psi
Maximum allowable pressure (MAP)	541.52 psi
Maximum allowable external pressure (MAEP)	113.69 psi
Rated MDMT	-320 °F

UHA-51 Material Toughness Requirements
Rated MDMT per UHA-51(d)(1)(a), (carbon content does not exceed 0.10%) = -320°F
Material is exempt from impact testing at the Design MDMT of -20°F.

Design thickness, (at 180 °F) Appendix 1-1

t = $P*R_o$ / (S*E + 0.40*P) + Corrosion
= 405.51*14 / (20,000*1.00 + 0.40*405.51) + 0.001
= 0.2826"

Maximum allowable working pressure, (at 180 °F) Appendix 1-1

P = S*E*t / (R_o - 0.40*t) - P_s
= 20,000*1.00*0.374 / (14 - 0.40*0.374) - 5.51
= 534.54 psi

Maximum allowable pressure, (at 70 °F) Appendix 1-1

P = S*E*t / (R_o - 0.40*t)
= 20,000*1.00*0.375 / (14 - 0.40*0.375)
= 541.52 psi

External Pressure, (Corroded & at 180 °F) UG-28(c)

L / D_o = 114.1882 / 28 = 4.0781
D_o / t = 28 / 0.1648 = 169.9152

From table G: A = 0.000142
From table HA-2: B = 1,911.5483 psi

P_a = 4*B / (3*(D_o / t))
= 4*1,911.55 / (3*(28 / 0.1648))
= 15 psi

Design thickness for external pressure P_a = 15 psi

t_a = t + Corrosion = 0.1648 + 0.001 = 0.1658"

Maximum Allowable External Pressure, (Corroded & at 180 °F) UG-28(c)

L / D_o = 114.1882 / 28 = 4.0781
D_o / t = 28 / 0.374 = 74.8663

From table G: A = 0.000470
From table HA-2: B = 6,383.7542 psi

P_a = $4*B / (3*(D_o / t))$
= 4*6,383.75 / (3*(28 / 0.374))
= 113.69 psi

% Forming strain - UHA-44(a)(2)

EFE = $(50*t / R_f)*(1 - R_f / R_o)$
= $(50*0.375 / 13.8125)*(1 - 13.8125 / \infty)$
= 1.3575%

External Pressure + Weight + Seismic Loading Check (Bergman, ASME paper 54-A-104)

P_v = $(1 + VAccel)*W / (2*\pi*R_m) + M / (\pi*R_m^2)$
= $1.20*1{,}399 / (2*\pi*13.813) + 67{,}361 / (\pi*13.813^2)$
= 131.7221 lb/in
α = $P_v / (P_e*D_o)$
= 131.7221 / (15*28)
= 0.3136
n = 3
m = $1.23 / (L / D_o)^2$
= $1.23 / (114.1882 / 28)^2$
= 0.074
Ratio P_e = $(n^2 - 1 + m + m*\alpha) / (n^2 - 1 + m)$
= $(3^2 - 1 + 0.074 + 0.074*0.3136) / (3^2 - 1 + 0.074)$
= 1.0029
Ratio P_e * P_e ≤ MAEP
(1.0029 * 15 = 15.04) ≤ 113.69
Cylinder design thickness is satisfactory.

Thickness Required Due to Pressure + External Loads								
Condition	Pressure P (psi)	Allowable Stress Before UG-23 Stress Increase (psi)		Temperature (°F)	Corrosion C (in)	Load	Req'd Thk Due to Tension (in)	Req'd Thk Due to Compression (in)
		S_t	S_c					
Operating, Hot & Corroded	400	20,000	12,369	180	0.001	Seismic	0.1176	0.1077
Operating, Hot & New	400	20,000	12,373	180	0	Seismic	0.1176	0.1077
Hot Shut Down, Corroded	0	20,000	12,369	180	0.001	Seismic	0.0044	0.0089
Hot Shut Down, New	0	20,000	12,373	180	0	Seismic	0.0044	0.0089
Empty, Corroded	0	20,000	12,748	70	0.001	Seismic	0.0015	0.004
Empty, New	0	20,000	12,751	70	0	Seismic	0.0015	0.004
Vacuum	-15	20,000	12,369	180	0.001	Seismic	0.0002	0.0158
Hot Shut Down, Corroded, Weight & Eccentric Moments Only	0	20,000	12,369	180	0.001	Weight	0.0013	0.0013

Allowable Compressive Stress, Hot and Corroded- S_{cHC}, (table HA-2)

A = 0.125 / (R_o / t)
= 0.125 / (14 / 0.374)
= 0.003339

B = 12,369 psi

S = 20,000 / 1.00 = 20,000 psi

S_{cHC} = min(B, S) = 12,369 psi

Allowable Compressive Stress, Hot and New- S_{cHN}, (table HA-2)

A = 0.125 / (R_o / t)
= 0.125 / (14 / 0.375)
= 0.003348

B = 12,373 psi

S = 20,000 / 1.00 = 20,000 psi

S_{cHN} = min(B, S) = 12,373 psi

Allowable Compressive Stress, Cold and New- S_{cCN}, (table HA-2)

A = 0.125 / (R_o / t)
= 0.125 / (14 / 0.375)
= 0.003348

B = 12,751 psi

S = 20,000 / 1.00 = 20,000 psi

S_{cCN} = min(B, S) = 12,751 psi

Allowable Compressive Stress, Cold and Corroded- S_{cCC}, (table HA-2)

A = 0.125 / (R_o / t)
= 0.125 / (14 / 0.374)
= 0.003339

B = 12,748 psi

S = 20,000 / 1.00 = 20,000 psi

S_{cCC} = min(B, S) = 12,748 psi

Allowable Compressive Stress, Vacuum and Corroded- S_{cVC}, (table HA-2)

A	=	$0.125 / (R_o / t)$
	=	0.125 / (14 / 0.374)
	=	0.003339
B	=	12,369 psi
S	=	20,000 / 1.00 = 20,000 psi
S_{cVC}	=	min(B, S) = 12,369 psi

Operating, Hot & Corroded, Seismic, Bottom Seam

t_p	=	$P*R / (2*S_t*K_s*E_c + 0.40*\|P\|)$	(Pressure)
	=	400*13.626 / (2*20,000*1.20*1.00 + 0.40*|400|)	
	=	0.1132"	
t_m	=	$M / (\pi*R_m^2*S_t*K_s*E_c)$	(bending)
	=	$67,361 / (\pi*13.813^2*20,000*1.20*1.00)$	
	=	0.0047"	
t_w	=	$(0.6 - VAccel)*W / (2*\pi*R_m*S_t*K_s*E_c)$	(Weight)
	=	$0.40*1,399 / (2*\pi*13.813*20,000*1.20*1.00)$	
	=	0.0003"	
t_t	=	$t_p + t_m - t_w$	(total required, tensile)
	=	0.1132 + 0.0047 - (0.0003)	
	=	0.1176"	
t_{wc}	=	$(1 + VAccel)*W / (2*\pi*R_m*S_t*K_s*E_c)$	(Weight)
	=	$1.20*1,399 / (2*\pi*13.813*20,000*1.20*1.00)$	
	=	0.0008"	
t_c	=	$\|t_{mc} + t_{wc} - t_{pc}\|$	(total, net tensile)
	=	|0.0047 + (0.0008) - (0.1132)|	
	=	0.1077"	

Maximum allowable working pressure, Longitudinal Stress

$P = 2*S_t*K_s*E_c*(t - t_m + t_w) / (R - 0.40*(t - t_m + t_w))$
= 2*20,000*1.20*1.00*(0.374 - 0.0047 + (0.0003)) / (13.626 - 0.40*(0.374 - 0.0047 + (0.0003)))
= 1,316.21 psi

Operating, Hot & New, Seismic, Bottom Seam

t_p	=	$P*R / (2*S_t*K_s*E_c + 0.40*\|P\|)$	(Pressure)
	=	400*13.625 / (2*20,000*1.20*1.00 + 0.40*|400|)	
	=	0.1132"	
t_m	=	$M / (\pi*R_m^2*S_t*K_s*E_c)$	(bending)
	=	$67,399 / (\pi*13.8125^2*20,000*1.20*1.00)$	
	=	0.0047"	
t_w	=	$(0.6 - VAccel)*W / (2*\pi*R_m*S_t*K_s*E_c)$	(Weight)

$= 0.40*1,402 / (2*\pi*13.8125*20,000*1.20*1.00)$
$= 0.0003"$

$t_t = t_p + t_m - t_w$ (total required, tensile)
$= 0.1132 + 0.0047 - (0.0003)$
$= 0.1176"$

$t_{wc} = (1 + VAccel)*W / (2*\pi*R_m*S_t*K_s*E_c)$ (Weight)
$= 1.20*1,402 / (2*\pi*13.8125*20,000*1.20*1.00)$
$= 0.0008"$

$t_c = |t_{mc} + t_{wc} - t_{pc}|$ (total, net tensile)
$= |0.0047 + (0.0008) - (0.1132)|$
$= 0.1077"$

Maximum allowable working pressure, Longitudinal Stress

$P = 2*S_t*K_s*E_c*(t - t_m + t_w) / (R - 0.40*(t - t_m + t_w))$
$= 2*20,000*1.20*1.00*(0.375 - 0.0047 + (0.0003)) / (13.625 - 0.40*(0.375 - 0.0047 + (0.0003)))$
$= 1,319.9$ psi

Hot Shut Down, Corroded, Seismic, Bottom Seam

$t_p = 0"$ (Pressure)
$t_m = M / (\pi*R_m^2*S_t*K_s*E_c)$ (bending)
$= 67,361 / (\pi*13.813^2*20,000*1.20*1.00)$
$= 0.0047"$

$t_w = (0.6 - VAccel)*W / (2*\pi*R_m*S_t*K_s*E_c)$ (Weight)
$= 0.40*1,399 / (2*\pi*13.813*20,000*1.20*1.00)$
$= 0.0003"$

$t_t = t_p + t_m - t_w$ (total required, tensile)
$= 0 + 0.0047 - (0.0003)$
$= 0.0044"$

$t_{mc} = M / (\pi*R_m^2*S_c*K_s)$ (bending)
$= 67,361 / (\pi*13.813^2*12,368.61*1.20)$
$= 0.0076"$

$t_{wc} = (1 + VAccel)*W / (2*\pi*R_m*S_c*K_s)$ (Weight)
$= 1.20*1,399 / (2*\pi*13.813*12,368.61*1.20)$
$= 0.0013"$

$t_c = t_{mc} + t_{wc} - t_{pc}$ (total required, compressive)
$= 0.0076 + (0.0013) - (0)$
$= 0.0089"$

Hot Shut Down, New, Seismic, Bottom Seam

$t_p = 0"$ (Pressure)
$t_m = M / (\pi*R_m^2*S_t*K_s*E_c)$ (bending)
$= 67,399 / (\pi*13.8125^2*20,000*1.20*1.00)$
$= 0.0047"$

t_w = (0.6 - VAccel)*W / (2*π*R_m*S_t*K_s*E_c) (Weight)
= 0.40*1,402 / (2*π*13.8125*20,000*1.20*1.00)
= 0.0003"

t_t = t_p + t_m - t_w (total required, tensile)
= 0 + 0.0047 - (0.0003)
= 0.0044"

t_{mc} = M / (π*R_m^2*S_c*K_s) (bending)
= 67,399 / (π*13.8125^2*12,372.58*1.20)
= 0.0076"

t_{wc} = (1 + VAccel)*W / (2*π*R_m*S_c*K_s) (Weight)
= 1.20*1,402 / (2*π*13.8125*12,372.58*1.20)
= 0.0013"

t_c = t_{mc} + t_{wc} - t_{pc} (total required, compressive)
= 0.0076 + (0.0013) - (0)
= 0.0089"

Empty, Corroded, Seismic, Bottom Seam

t_p = 0" (Pressure)
t_m = M / (π*R_m^2*S_t*K_s*E_c) (bending)
= 25,203 / (π*13.813^2*20,000*1.20*1.00)
= 0.0018"

t_w = (0.6 - VAccel)*W / (2*π*R_m*S_t*K_s*E_c) (Weight)
= 0.40*1,399 / (2*π*13.813*20,000*1.20*1.00)
= 0.0003"

t_t = t_p + t_m - t_w (total required, tensile)
= 0 + 0.0018 - (0.0003)
= 0.0015"

t_{mc} = M / (π*R_m^2*S_c*K_s) (bending)
= 25,203 / (π*13.813^2*12,747.52*1.20)
= 0.0027"

t_{wc} = (1 + VAccel)*W / (2*π*R_m*S_c*K_s) (Weight)
= 1.20*1,399 / (2*π*13.813*12,747.52*1.20)
= 0.0013"

t_c = t_{mc} + t_{wc} - t_{pc} (total required, compressive)
= 0.0027 + (0.0013) - (0)
= 0.004"

Empty, New, Seismic, Bottom Seam

t_p = 0" (Pressure)
t_m = M / (π*R_m^2*S_t*K_s*E_c) (bending)
= 25,248 / (π*13.8125^2*20,000*1.20*1.00)
= 0.0018"

t_w = (0.6 - VAccel)*W / (2*π*R_m*S_t*K_s*E_c) (Weight)
= 0.40*1,402 / (2*π*13.8125*20,000*1.20*1.00)

$= 0.0003"$

$t_t = t_p + t_m - t_w$ (total required, tensile)
$= 0 + 0.0018 - (0.0003)$
$= 0.0015"$

$t_{mc} = M / (\pi*R_m^2*S_c*K_s)$ (bending)
$= 25{,}248 / (\pi*13.8125^2*12{,}751.22*1.20)$
$= 0.0028"$

$t_{wc} = (1 + VAccel)*W / (2*\pi*R_m*S_c*K_s)$ (Weight)
$= 1.20*1{,}402 / (2*\pi*13.8125*12{,}751.22*1.20)$
$= 0.0013"$

$t_c = t_{mc} + t_{wc} - t_{pc}$ (total required, compressive)
$= 0.0028 + (0.0013) - (0)$
$= 0.004"$

Vacuum, Seismic, Bottom Seam

$t_p = P*R / (2*S_t*K_s*E_c + 0.40*|P|)$ (Pressure)
$= -15*13.626 / (2*20{,}000*1.20*1.00 + 0.40*|15|)$
$= -0.0043"$

$t_m = M / (\pi*R_m^2*S_t*K_s*E_c)$ (bending)
$= 67{,}361 / (\pi*13.813^2*20{,}000*1.20*1.00)$
$= 0.0047"$

$t_w = (0.6 - VAccel)*W / (2*\pi*R_m*S_t*K_s*E_c)$ (Weight)
$= 0.40*1{,}399 / (2*\pi*13.813*20{,}000*1.20*1.00)$
$= 0.0003"$

$t_t = t_p + t_m - t_w$ (total required, tensile)
$= -0.0043 + 0.0047 - (0.0003)$
$= 0.0002"$

$t_{pc} = P*R / (2*S_c*K_s + 0.40*|P|)$ (Pressure)
$= -15*13.626 / (2*12{,}368.61*1.20 + 0.40*|15|)$
$= -0.0069"$

$t_{mc} = M / (\pi*R_m^2*S_c*K_s)$ (bending)
$= 67{,}361 / (\pi*13.813^2*12{,}368.61*1.20)$
$= 0.0076"$

$t_{wc} = (1 + VAccel)*W / (2*\pi*R_m*S_c*K_s)$ (Weight)
$= 1.20*1{,}399 / (2*\pi*13.813*12{,}368.61*1.20)$
$= 0.0013"$

$t_c = t_{mc} + t_{wc} - t_{pc}$ (total required, compressive)
$= 0.0076 + (0.0013) - (-0.0069)$
$= 0.0158"$

Maximum Allowable External Pressure, Longitudinal Stress

$P = 2*S_c*K_s*(t - t_{mc} - t_{wc}) / (R - 0.40*(t - t_{mc} - t_{wc}))$
$= 2*12{,}368.61*1.20*(0.374 - 0.0076 - 0.0013) / (13.626 - 0.40*(0.374 - 0.0076 - 0.0013))$
$= 804.05$ psi

Hot Shut Down, Corroded, Weight & Eccentric Moments Only, Bottom Seam

t_p = 0" (Pressure)

t_m = $M / (\pi * R_m^2 * S_c * K_s)$ (bending)

= $0 / (\pi * 13.813^2 * 12{,}368.61 * 1.00)$

= 0"

t_w = $W / (2 * \pi * R_m * S_c * K_s)$ (Weight)

= $1{,}399 / (2 * \pi * 13.813 * 12{,}368.61 * 1.00)$

= 0.0013"

t_t = $|t_p + t_m - t_w|$ (total, net compressive)

= $|0 + 0 - (0.0013)|$

= 0.0013"

t_c = $t_{mc} + t_{wc} - t_{pc}$ (total required, compressive)

= 0 + (0.0013) - (0)

= 0.0013"

Ellipsoidal Head #1

ASME Section VIII Division 1, 2017 Edition				
Component		Ellipsoidal Head		
Material		SA-240 316 (II-D p. 70, ln. 39)		
Attached To		Cylinder #1		
Impact Tested	**Normalized**	**Fine Grain Practice**	**PWHT**	**Optimize MDMT/ Find MAWP**
No	No	No	No	No
		Design Pressure (psi)	**Design Temperature (°F)**	**Design MDMT (°F)**
Internal		400	180	-20
External		15	180	
Static Liquid Head				
Condition		**P_s (psi)**	**H_s (in)**	**SG**
Operating		5.9	128.5908	1.27
Test horizontal		0.99	27.375	1
Dimensions				
Outer Diameter		28"		
Head Ratio		2		
Minimum Thickness		0.3125"		
Corrosion	**Inner**	0.001"		
	Outer	0"		
Length L_{sf}		1.5"		
Nominal Thickness t_{sf}		0.375"		
Weight and Capacity				
		Weight (lb)[1]		**Capacity (US gal)[1]**
New		94.52		15.41
Corroded		94.23		15.42
Radiography				
Category A joints		Seamless No RT		
Head to shell seam		User Defined (E = 1)		

[1] includes straight flange

Results Summary	
Governing condition	internal pressure
Minimum thickness per UG-16	0.0625" + 0.001" = 0.0635"
Design thickness due to internal pressure (t)	0.2801"
Design thickness due to external pressure (t_e)	0.0744"
Maximum allowable working pressure (MAWP)	448.24 psi
Maximum allowable pressure (MAP)	455.58 psi
Maximum allowable external pressure (MAEP)	136.72 psi
Straight Flange governs MDMT	-320°F

Factor K		
K = (1/6)*[2 + (D / (2*h))^2]		
Corroded	K = (1/6)*[2 + (27.377 / (2*6.8448))^2]	0.9999
New	K = (1/6)*[2 + (27.375 / (2*6.8438))^2]	1

Design thickness for internal pressure, (Corroded at 180 °F) Appendix 1-4(c)

t = $P*D_o*K / (2*S*E + 2*P*(K - 0.1))$ + Corrosion
= 405.9*28*0.999903 / (2*20,000*1 + 2*405.9*(0.999903 - 0.1)) + 0.001
= 0.28"

Maximum allowable working pressure, (Corroded at 180 °F) Appendix 1-4(c)

P = $2*S*E*t / (K*D_o - 2*t*(K - 0.1)) - P_s$
= 2*20,000*1*0.3115 / (0.999903*28 - 2*0.3115*(0.999903 - 0.1)) - 5.9
= 448.24 psi

Maximum allowable pressure, (New at 70 °F) Appendix 1-4(c)

P = $2*S*E*t / (K*D_o - 2*t*(K - 0.1)) - P_s$
= 2*20,000*1*0.3125 / (1*28 - 2*0.3125*(1 - 0.1)) - 0
= 455.58 psi

Design thickness for external pressure, (Corroded at 180 °F) UG-33(d)

Equivalent outside spherical radius (R_o)
R_o = K_o*D_o
= 0.8803*28
= 24.6498 in

A = $0.125 / (R_o / t)$
= 0.125 / (24.6498 / 0.073349)
= 0.000372

From Table HA-2: B = 5,040.9142 psi

P_a = $B / (R_o / t)$
= 5,040.9142 / (24.6498 / 0.0733)
= 15 psi

t = 0.0733" + Corrosion = 0.0733" + 0.001" = 0.0743"
Check the external pressure per UG-33(a)(1) Appendix 1-4(c)

t = $1.67*P_e*D_o*K / (2*S*E + 2*1.67*P_e*(K - 0.1))$ + Corrosion
= 1.67*15*28*0.999903 / (2*20,000*1 + 2*1.67*15*(0.999903 - 0.1)) + 0.001
= 0.0185"

The head external pressure design thickness (t_e) is 0.0743".

Maximum Allowable External Pressure, (Corroded at 180 °F) UG-33(d)

Equivalent outside spherical radius (R_o)
R_o = K_o*D_o
= 0.8803*28
= 24.6498 in

A = $0.125 / (R_o / t)$
= 0.125 / (24.6498 / 0.3115)
= 0.00158

From Table HA-2: B = 10,818.69 psi

P_a = $B / (R_o / t)$
= 10,818.69 / (24.6498 / 0.3115)
= 136.7161 psi

Check the Maximum External Pressure, UG-33(a)(1) Appendix 1-4(c)

P = $2*S*E*t / ((K*D_o - 2*t*(K - 0.1))*1.67)$
= 2*20,000*1*0.3115 / ((0.999903*28 - 2*0.3115*(0.999903 - 0.1))*1.67)
= 271.94 psi

The maximum allowable external pressure (MAEP) is 136.72 psi.

% Forming strain - UHA-44(a)(2)

EFE = $(75*t / R_f)*(1 - R_f / R_o)$
= (75*0.375 / 4.8413)*(1 - 4.8413 / ∞)
= 5.8095%

Straight Flange on Ellipsoidal Head #1

ASME Section VIII Division 1, 2017 Edition				
Component		Cylinder		
Material		SA-240 316 (II-D p. 70, ln. 39)		
Impact Tested	**Normalized**	**Fine Grain Practice**	**PWHT**	**Optimize MDMT/ Find MAWP**
No	No	No	No	No
		Design Pressure (psi)	**Design Temperature (°F)**	**Design MDMT (°F)**
Internal		400	180	-20
External		15	180	
Static Liquid Head				
Condition		**P_s (psi)**	**H_s (in)**	**SG**
Operating		5.58	121.746	1.27
Test horizontal		0.99	27.3125	1
Dimensions				
Outer Diameter		28"		
Length		1.5"		
Nominal Thickness		0.375"		
Corrosion	**Inner**	0.001"		
	Outer	0"		
Weight and Capacity				
		Weight (lb)		**Capacity (US gal)**
New		14.16		3.79
Corroded		14.12		3.79
Radiography				
Longitudinal seam		Seamless No RT		
Top Circumferential seam		User Defined (E = 1)		

Results Summary	
Governing condition	Internal pressure
Minimum thickness per UG-16	0.0625" + 0.001" = 0.0635"
Design thickness due to internal pressure (t)	0.2827"
Design thickness due to external pressure (t_e)	0.1658"
Design thickness due to combined loadings + corrosion	0.1187"
Maximum allowable working pressure (MAWP)	534.48 psi
Maximum allowable pressure (MAP)	541.52 psi
Maximum allowable external pressure (MAEP)	113.69 psi
Rated MDMT	-320 °F

UHA-51 Material Toughness Requirements
Rated MDMT per UHA-51(d)(1)(a), (carbon content does not exceed 0.10%) = -320°F
Material is exempt from impact testing at the Design MDMT of -20°F.

Design thickness, (at 180 °F) Appendix 1-1

t = $P*R_o$ / (S*E + 0.40*P) + Corrosion
= 405.58*14 / (20,000*1.00 + 0.40*405.58) + 0.001
= 0.2827"

Maximum allowable working pressure, (at 180 °F) Appendix 1-1

P = S*E*t / (R_o - 0.40*t) - P_s
= 20,000*1.00*0.374 / (14 - 0.40*0.374) - 5.58
= 534.48 psi

Maximum allowable pressure, (at 70 °F) Appendix 1-1

P = S*E*t / (R_o - 0.40*t)
= 20,000*1.00*0.375 / (14 - 0.40*0.375)
= 541.52 psi

External Pressure, (Corroded & at 180 °F) UG-28(c)

L / D_o = 114.1882 / 28 = 4.0781
D_o / t = 28 / 0.1648 = 169.9152

From table G: A = 0.000142
From table HA-2: B = 1,911.5483 psi

P_a = 4*B / (3*(D_o / t))
= 4*1,911.55 / (3*(28 / 0.1648))
= 15 psi

Design thickness for external pressure P_a = 15 psi

t_a = t + Corrosion = 0.1648 + 0.001 = 0.1658"

Maximum Allowable External Pressure, (Corroded & at 180 °F) UG-28(c)

L / D_o = 114.1882 / 28 = 4.0781
D_o / t = 28 / 0.374 = 74.8663

From table G: A = 0.000470
From table HA-2: B = 6,383.7542 psi

P_a = 4*B / (3*(D_o / t))
= 4*6,383.75 / (3*(28 / 0.374))
= 113.69 psi

% Forming strain - UHA-44(a)(2)

EFE = (50*t / R_f)*(1 - R_f / R_o)
= (50*0.375 / 13.8125)*(1 - 13.8125 / ∞)
= 1.3575%

Thickness Required Due to Pressure + External Loads								
Condition	Pressure P (psi)	Allowable Stress Before UG-23 Stress Increase (psi)		Temperature (°F)	Corrosion C (in)	Load	Req'd Thk Due to Tension (in)	Req'd Thk Due to Compression (in)
		S_t	S_c					
Operating, Hot & Corroded	400	20,000	12,369	180	0.001	Seismic	0.1177	0.1076
Operating, Hot & New	400	20,000	12,373	180	0	Seismic	0.1177	0.1076
Hot Shut Down, Corroded	0	20,000	12,369	180	0.001	Seismic	0.0045	0.009
Hot Shut Down, New	0	20,000	12,373	180	0	Seismic	0.0045	0.009
Empty, Corroded	0	20,000	12,748	70	0.001	Seismic	0.0015	0.0041
Empty, New	0	20,000	12,751	70	0	Seismic	0.0015	0.0041
Vacuum	-15	20,000	12,369	180	0.001	Seismic	0.0002	0.0159
Hot Shut Down, Corroded, Weight & Eccentric Moments Only	0	20,000	12,369	180	0.001	Weight	0.0013	0.0013

Allowable Compressive Stress, Hot and Corroded- S_{cHC}, (table HA-2)

A = 0.125 / (R_o / t)
= 0.125 / (14 / 0.374)
= 0.003339
B = 12,369 psi
S = 20,000 / 1.00 = 20,000 psi
S_{cHC} = min(B, S) = 12,369 psi

Allowable Compressive Stress, Hot and New- S_{cHN}, (table HA-2)

A = 0.125 / (R_o / t)
= 0.125 / (14 / 0.375)
= 0.003348
B = 12,373 psi
S = 20,000 / 1.00 = 20,000 psi
S_{cHN} = min(B, S) = 12,373 psi

Allowable Compressive Stress, Cold and New- S_{cCN}, (table HA-2)

A = $0.125 / (R_o / t)$
= 0.125 / (14 / 0.375)
= 0.003348

B = 12,751 psi

S = 20,000 / 1.00 = 20,000 psi

S_{cCN} = min(B, S) = 12,751 psi

Allowable Compressive Stress, Cold and Corroded- S_{cCC}, (table HA-2)

A = $0.125 / (R_o / t)$
= 0.125 / (14 / 0.374)
= 0.003339

B = 12,748 psi

S = 20,000 / 1.00 = 20,000 psi

S_{cCC} = min(B, S) = 12,748 psi

Allowable Compressive Stress, Vacuum and Corroded- S_{cVC}, (table HA-2)

A = $0.125 / (R_o / t)$
= 0.125 / (14 / 0.374)
= 0.003339

B = 12,369 psi

S = 20,000 / 1.00 = 20,000 psi

S_{cVC} = min(B, S) = 12,369 psi

Operating, Hot & Corroded, Seismic, Bottom Seam

t_p = $P*R / (2*S_t*K_s*E_c + 0.40*|P|)$ (Pressure)
= 400*13.626 / (2*20,000*1.20*1.00 + 0.40*|400|)
= 0.1132"

t_m = $M / (\pi*R_m^2*S_t*K_s*E_c)$ (bending)
= 68,711 / (π*13.813^2*20,000*1.20*1.00)
= 0.0048"

t_w = $(0.6 - VAccel)*W / (2*\pi*R_m*S_t*K_s*E_c)$ (Weight)
= 0.40*1,413.2 / (2*π*13.813*20,000*1.20*1.00)
= 0.0003"

t_t = $t_p + t_m - t_w$ (total required, tensile)
= 0.1132 + 0.0048 - (0.0003)
= 0.1177"

t_{wc} = $(1 + VAccel)*W / (2*\pi*R_m*S_t*K_s*E_c)$ (Weight)
= 1.20*1,413.2 / (2*π*13.813*20,000*1.20*1.00)
= 0.0008"

t_c = $|t_{mc} + t_{wc} - t_{pc}|$ (total, net tensile)
= |0.0048 + (0.0008) - (0.1132)|

$= 0.1076"$

Maximum allowable working pressure, Longitudinal Stress

$P = 2*S_t*K_s*E_c*(t - t_m + t_w) / (R - 0.40*(t - t_m + t_w))$
$= 2*20,000*1.20*1.00*(0.374 - 0.0048 + (0.0003)) / (13.626 - 0.40*(0.374 - 0.0048 + (0.0003)))$
$= 1,315.89$ psi

Operating, Hot & New, Seismic, Bottom Seam

t_p	=	$P*R / (2*S_t*K_s*E_c + 0.40*\|P\|)$	(Pressure)
	=	$400*13.625 / (2*20,000*1.20*1.00 + 0.40*\|400\|)$	
	=	0.1132"	
t_m	=	$M / (\pi*R_m^2*S_t*K_s*E_c)$	(bending)
	=	$68,749 / (\pi*13.8125^2*20,000*1.20*1.00)$	
	=	0.0048"	
t_w	=	$(0.6 - VAccel)*W / (2*\pi*R_m*S_t*K_s*E_c)$	(Weight)
	=	$0.40*1,416.1 / (2*\pi*13.8125*20,000*1.20*1.00)$	
	=	0.0003"	
t_t	=	$t_p + t_m - t_w$	(total required, tensile)
	=	$0.1132 + 0.0048 - (0.0003)$	
	=	0.1177"	
t_{wc}	=	$(1 + VAccel)*W / (2*\pi*R_m*S_t*K_s*E_c)$	(Weight)
	=	$1.20*1,416.1 / (2*\pi*13.8125*20,000*1.20*1.00)$	
	=	0.0008"	
t_c	=	$\|t_{mc} + t_{wc} - t_{pc}\|$	(total, net tensile)
	=	$\|0.0048 + (0.0008) - (0.1132)\|$	
	=	0.1076"	

Maximum allowable working pressure, Longitudinal Stress

$P = 2*S_t*K_s*E_c*(t - t_m + t_w) / (R - 0.40*(t - t_m + t_w))$
$= 2*20,000*1.20*1.00*(0.375 - 0.0048 + (0.0003)) / (13.625 - 0.40*(0.375 - 0.0048 + (0.0003)))$
$= 1,319.57$ psi

Hot Shut Down, Corroded, Seismic, Bottom Seam

t_p	= 0"	(Pressure)
t_m	= $M / (\pi*R_m^2*S_t*K_s*E_c)$	(bending)
	= $68,711 / (\pi*13.813^2*20,000*1.20*1.00)$	
	= 0.0048"	
t_w	= $(0.6 - VAccel)*W / (2*\pi*R_m*S_t*K_s*E_c)$	(Weight)
	= $0.40*1,413.2 / (2*\pi*13.813*20,000*1.20*1.00)$	
	= 0.0003"	
t_t	= $t_p + t_m - t_w$	(total required, tensile)
	= $0 + 0.0048 - (0.0003)$	

$= 0.0045"$

$t_{mc} = M / (\pi*R_m^2*S_c*K_s)$ (bending)
$= 68,711 / (\pi*13.813^2*12,368.61*1.20)$
$= 0.0077"$

$t_{wc} = (1 + VAccel)*W / (2*\pi*R_m*S_c*K_s)$ (Weight)
$= 1.20*1,413.2 / (2*\pi*13.813*12,368.61*1.20)$
$= 0.0013"$

$t_c = t_{mc} + t_{wc} - t_{pc}$ (total required, compressive)
$= 0.0077 + (0.0013) - (0)$
$= 0.009"$

Hot Shut Down, New, Seismic, Bottom Seam

$t_p = 0"$ (Pressure)
$t_m = M / (\pi*R_m^2*S_t*K_s*E_c)$ (bending)
$= 68,749 / (\pi*13.8125^2*20,000*1.20*1.00)$
$= 0.0048"$

$t_w = (0.6 - VAccel)*W / (2*\pi*R_m*S_t*K_s*E_c)$ (Weight)
$= 0.40*1,416.1 / (2*\pi*13.8125*20,000*1.20*1.00)$
$= 0.0003"$

$t_t = t_p + t_m - t_w$ (total required, tensile)
$= 0 + 0.0048 - (0.0003)$
$= 0.0045"$

$t_{mc} = M / (\pi*R_m^2*S_c*K_s)$ (bending)
$= 68,749 / (\pi*13.8125^2*12,372.58*1.20)$
$= 0.0077"$

$t_{wc} = (1 + VAccel)*W / (2*\pi*R_m*S_c*K_s)$ (Weight)
$= 1.20*1,416.1 / (2*\pi*13.8125*12,372.58*1.20)$
$= 0.0013"$

$t_c = t_{mc} + t_{wc} - t_{pc}$ (total required, compressive)
$= 0.0077 + (0.0013) - (0)$
$= 0.009"$

Empty, Corroded, Seismic, Bottom Seam

$t_p = 0"$ (Pressure)
$t_m = M / (\pi*R_m^2*S_t*K_s*E_c)$ (bending)
$= 25,660 / (\pi*13.813^2*20,000*1.20*1.00)$
$= 0.0018"$

$t_w = (0.6 - VAccel)*W / (2*\pi*R_m*S_t*K_s*E_c)$ (Weight)
$= 0.40*1,413.2 / (2*\pi*13.813*20,000*1.20*1.00)$
$= 0.0003"$

$t_t = t_p + t_m - t_w$ (total required, tensile)
$= 0 + 0.0018 - (0.0003)$
$= 0.0015"$

$t_{mc} = M / (\pi*R_m^2*S_c*K_s)$ (bending)

$= 25{,}660 / (\pi*13.813^2*12{,}747.52*1.20)$
$= 0.0028"$

$t_{wc} = (1 + VAccel)*W / (2*\pi*R_m*S_c*K_s)$ (Weight)
$= 1.20*1{,}413.2 / (2*\pi*13.813*12{,}747.52*1.20)$
$= 0.0013"$

$t_c = t_{mc} + t_{wc} - t_{pc}$ (total required, compressive)
$= 0.0028 + (0.0013) - (0)$
$= 0.0041"$

Empty, New, Seismic, Bottom Seam

$t_p = 0"$ (Pressure)
$t_m = M / (\pi*R_m^2*S_t*K_s*E_c)$ (bending)
$= 25{,}705 / (\pi*13.8125^2*20{,}000*1.20*1.00)$
$= 0.0018"$

$t_w = (0.6 - VAccel)*W / (2*\pi*R_m*S_t*K_s*E_c)$ (Weight)
$= 0.40*1{,}416.1 / (2*\pi*13.8125*20{,}000*1.20*1.00)$
$= 0.0003"$

$t_t = t_p + t_m - t_w$ (total required, tensile)
$= 0 + 0.0018 - (0.0003)$
$= 0.0015"$

$t_{mc} = M / (\pi*R_m^2*S_c*K_s)$ (bending)
$= 25{,}705 / (\pi*13.8125^2*12{,}751.22*1.20)$
$= 0.0028"$

$t_{wc} = (1 + VAccel)*W / (2*\pi*R_m*S_c*K_s)$ (Weight)
$= 1.20*1{,}416.1 / (2*\pi*13.8125*12{,}751.22*1.20)$
$= 0.0013"$

$t_c = t_{mc} + t_{wc} - t_{pc}$ (total required, compressive)
$= 0.0028 + (0.0013) - (0)$
$= 0.0041"$

Vacuum, Seismic, Bottom Seam

$t_p = P*R / (2*S_t*K_s*E_c + 0.40*|P|)$ (Pressure)
$= -15*13.626 / (2*20{,}000*1.20*1.00 + 0.40*|15|)$
$= -0.0043"$

$t_m = M / (\pi*R_m^2*S_t*K_s*E_c)$ (bending)
$= 68{,}711 / (\pi*13.813^2*20{,}000*1.20*1.00)$
$= 0.0048"$

$t_w = (0.6 - VAccel)*W / (2*\pi*R_m*S_t*K_s*E_c)$ (Weight)
$= 0.40*1{,}413.2 / (2*\pi*13.813*20{,}000*1.20*1.00)$
$= 0.0003"$

$t_t = t_p + t_m - t_w$ (total required, tensile)
$= -0.0043 + 0.0048 - (0.0003)$
$= 0.0002"$

$t_{pc} = P*R / (2*S_c*K_s + 0.40*|P|)$ (Pressure)

$= -15*13.626 / (2*12{,}368.61*1.20 + 0.40*|15|)$
$= -0.0069"$

$t_{mc} = M / (\pi*R_m^2*S_c*K_s)$ (bending)
$= 68{,}711 / (\pi*13.813^2*12{,}368.61*1.20)$
$= 0.0077"$

$t_{wc} = (1 + VAccel)*W / (2*\pi*R_m*S_c*K_s)$ (Weight)
$= 1.20*1{,}413.2 / (2*\pi*13.813*12{,}368.61*1.20)$
$= 0.0013"$

$t_c = t_{mc} + t_{wc} - t_{pc}$ (total required, compressive)
$= 0.0077 + (0.0013) - (-0.0069)$
$= \underline{0.0159"}$

Maximum Allowable External Pressure, Longitudinal Stress

$P = 2*S_c*K_s*(t - t_{mc} - t_{wc}) / (R - 0.40*(t - t_{mc} - t_{wc}))$
$= 2*12{,}368.61*1.20*(0.374 - 0.0077 - 0.0013) / (13.626 - 0.40*(0.374 - 0.0077 - 0.0013))$
$= \underline{803.69}$ psi

Hot Shut Down, Corroded, Weight & Eccentric Moments Only, Bottom Seam

$t_p = 0"$ (Pressure)
$t_m = M / (\pi*R_m^2*S_c*K_s)$ (bending)
$= 0 / (\pi*13.813^2*12{,}368.61*1.00)$
$= 0"$

$t_w = W / (2*\pi*R_m*S_c*K_s)$ (Weight)
$= 1{,}413.2 / (2*\pi*13.813*12{,}368.61*1.00)$
$= 0.0013"$

$t_t = |t_p + t_m - t_w|$ (total, net compressive)
$= |0 + 0 - (0.0013)|$
$= \underline{0.0013"}$

$t_c = t_{mc} + t_{wc} - t_{pc}$ (total required, compressive)
$= 0 + (0.0013) - (0)$
$= \underline{0.0013"}$

Liquid Level bounded by Ellipsoidal Head #1

ASME Section VIII Division 1, 2017 Edition	
Location from Datum (in)	-13.621
Operating Liquid Specific Gravity	1.27

Inlet (N1)

ASME Section VIII Division 1, 2017 Edition	
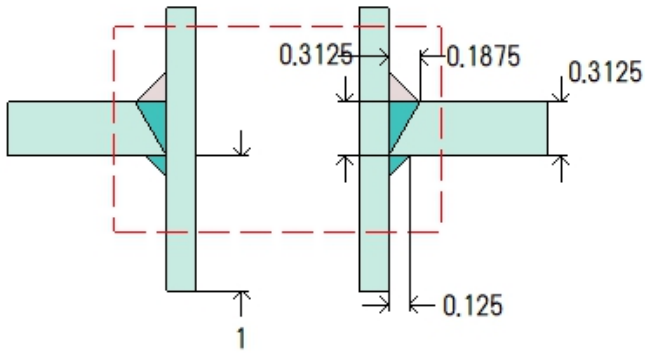	
Note: round inside edges per UG-76(c)	
Location and Orientation	
Located on	Ellipsoidal Head #1
Orientation	0°
End of nozzle to datum line	118.75"
Calculated as hillside	No
Distance to head center, R	0"
Passes through a Category A joint	No
Nozzle	
Description	NPS 1 Sch 80S (XS)
Access opening	No
Material specification	SA-312 TP316 Wld & smls pipe (II-D p. 74, ln. 1)
Inside diameter, new	0.957"
Pipe nominal wall thickness	0.179"
Pipe minimum wall thickness[1]	0.1566"
Corrosion allowance	0.001"
Projection available outside vessel, Lpr	3.4766"
Internal projection, h_{new}	1"
Local vessel minimum thickness	0.3125"
Liquid static head included	6.05 psi
Longitudinal joint efficiency	1
Welds	
Inner fillet, Leg_{41}	0.1875"

Lower fillet, Leg_{43}	0.125"
Nozzle to vessel groove weld	0.3125"

[1]Pipe minimum thickness = nominal thickness times pipe tolerance factor of 0.875.

UHA-51 Material Toughness Requirements Nozzle	
External nozzle loadings per UG-22 govern the coincident ratio used.	
Stress ratio = t_r*E^* / (t_n - c) = 0.0533*1 / (0.1566 - 0.001) =	0.3424
Impact test exempt per UHA-51(g) (coincident ratio = 0.3424)	
Rated MDMT =	-320°F
Material is exempt from impact testing at the Design MDMT of -20°F.	

Reinforcement Calculations for Internal Pressure

UG-37 Area Calculation Summary (in^2)							UG-45 Summary (in)	
For P = 406.05 psi @ 180 °F							The nozzle passes UG-45	
A required	A available	A_1	A_2	A_3	A_5	A welds	t_{req}	t_{min}
This nozzle is exempt from area calculations per UG-36(c)(3)(a)							0.1174	0.1566

UG-41 Weld Failure Path Analysis Summary
The nozzle is exempt from weld strength calculations per UW-15(b)(2)

UW-16 Weld Sizing Summary			
Weld description	Required weld throat size (in)	Actual weld throat size (in)	Status
Nozzle to shell fillet (Leg_{41})	0.1246	0.1312	weld size is adequate

WRC 537												
Load Case	P (psi)	P_r (lb_f)	M_1 (lb_f-in)	V_2 (lb_f)	M_2 (lb_f-in)	V_1 (lb_f)	M_t (lb_f-in)	Max Comb Stress (psi)	Allow Comb Stress (psi)	Max Local Primary Stress (psi)	Allow Local Primary Stress (psi)	Over stressed
Load case 1	406.05	50	900	50	900	50	0	**30,661**	**60,000**	**18,472**	**30,000**	No
Load case 1 (Hot Shut Down)	0	50	900	50	900	50	0	-13,907	60,000	-664	30,000	No

Calculations for internal pressure 406.05 psi @ 180 °F

Parallel Limit of reinforcement per UG-40

L_R = MAX(d, R_n + (t_n - C_n) + (t - C))
= MAX(0.959, 0.4795 + (0.179 - 0.001) + (0.3125 - 0.001))
= 0.969 in

Outer Normal Limit of reinforcement per UG-40

L_H = MIN(2.5*(t - C), 2.5*(t_n - C_n) + t_e)
= MIN(2.5*(0.3125 - 0.001), 2.5*(0.179 - 0.001) + 0)
= 0.445 in

Inner Normal Limit of reinforcement per UG-40

L_I = MIN(h, 2.5*(t - C), 2.5*(t_i - C_n - C))
= MIN(0.999, 2.5*(0.3125 - 0.001), 2.5*(0.179 - 0.001 - 0.001))
= 0.4425 in

Nozzle required thickness per UG-27(c)(1)

t_{rn} = $P*R_n / (S_n*E - 0.6*P)$
= 406.054*0.4795 / (20,000*1 - 0.6*406.054)
= 0.0099 in

Required thickness t_r from UG-37(a)(c)

t_r = $P*K_1*D_o / (2*S*E + 0.8*P)$
= 406.054*0.8999*28 / (2*20,000*1 + 0.8*406.054)
= 0.2537 in

Required thickness t_r per Interpretation VIII-1-07-50

t_r = $P*D_o*K / (2*S*E + 2*P*(K - 0.1))$
= 406.05*28*0.999903 / (2*20,000*1 + 2*406.05*(0.999903 - 0.1))
= 0.2791"

This opening does not require reinforcement per UG-36(c)(3)(a)

UW-16(c) Weld Check

Fillet weld: t_{min} = lesser of 0.75 or t_n or t = 0.178 in
$t_{c(min)}$ = lesser of 0.25 or 0.7*t_{min} = 0.1246 in
$t_{c(actual)}$ = 0.7*Leg = 0.7*0.1875 = 0.1313 in

The fillet weld size is satisfactory.

Weld strength calculations are not required for this detail which conforms to Fig. UW-16.1, sketch (c-e).

UG-45 Nozzle Neck Thickness Check

Interpretation VIII-1-83-66 has been applied.

$t_{a\ UG-27}$ = $P*R_n / (S_n*E - 0.6*P)$ + Corrosion
= 406.0683*0.4795 / (20,000*1 - 0.6*406.0683) + 0.001
= 0.0109 in

$t_{a\ UG-22}$ = 0.0535 in

t_a = max[$t_{a\ UG-27}$, $t_{a\ UG-22}$]
= max[0.0109 , 0.0535]
= 0.0535 in

t_{b1} = 0.2801 in

t_{b1} = max[t_{b1} , $t_{b\ UG16}$]
= max[0.2801 , 0.0635]
= 0.2801 in

t_b = min[t_{b3} , t_{b1}]
= min[0.1174 , 0.2801]
= 0.1174 in

t_{UG-45} = max[t_a , t_b]
= max[0.0535 , 0.1174]
= 0.1174 in

Available nozzle wall thickness new, t_n = 0.875*0.179 = 0.1566 in

The nozzle neck thickness is adequate.

WRC 537 Load case 1

Applied Loads	
Radial load, P_r	50 lb_f
Circumferential moment, M_1	900 lb_f-in
Circumferential shear, V_2	50 lb_f
Longitudinal moment, M_2	900 lb_f-in
Longitudinal shear, V_1	50 lb_f
Torsion moment, M_t	0 lb_f-in
Internal pressure, P	406.05 psi
Mean dish radius, R_m	24.8044"
Local head thickness, T	0.3115"
Design factor	3

Maximum stresses due to the applied loads at the nozzle OD (includes pressure)

$U = r_o$ / Sqr(R_m*T) = 0.6575 / Sqr(24.8044*0.3115) = 0.237

Pressure stress intensity factor, I = 1.1222 (derived from Division 2 Part 4.5)

Local pressure stress = I*P*R_i / (2*T) =18,028 psi

Maximum combined stress (P_L+P_b+Q) = 30,661 psi
Allowable combined stress (P_L+P_b+Q) = ±3*S = ±60,000 psi

Note: The allowable combined stress (P_L+P_b+Q) is based on the strain hardening characteristics of this material.

The maximum combined stress (P_L+P_b+Q) is within allowable limits.

Maximum local primary membrane stress (P_L) = 18,472 psi
Allowable local primary membrane stress (P_L) = ±1.5*S = ±30,000 psi

The maximum local primary membrane stress (P_L) is within allowable limits.

Stresses at the nozzle OD per WRC Bulletin 537										
Figure	**Y**		**A_u**	**A_l**	**B_u**	**B_l**	**C_u**	**C_l**	**D_u**	**D_l**
SR-2*	N_x*T / P	0.214	-110	-110	-110	-110	-110	-110	-110	-110
SR-2	M_x / P	0.1703	-527	527	-527	527	-527	527	-527	527
SR-3*	N_x*T*(R_m*T)$^{0.5}$ / M_1	0.1662	0	0	0	0	-554	-554	554	554
SR-3	M_x*(R_m*T)$^{0.5}$ / M_1	0.6351	0	0	0	0	-12,715	12,715	12,715	-12,715
SR-3*	N_x*T*(R_m*T)$^{0.5}$ / M_2	0.1662	-554	-554	554	554	0	0	0	0
SR-3	M_x*(R_m*T)$^{0.5}$ / M_2	0.6351	-12,715	12,715	12,715	-12,715	0	0	0	0
Pressure stress*			18,028	18,028	18,028	18,028	18,028	18,028	18,028	18,028
Total O_x stress			4,122	30,606	30,660	6,284	4,122	30,606	30,660	6,284
Membrane O_x stress*			17,364	17,364	18,472	18,472	17,364	17,364	18,472	18,472
SR-2*	N_y*T / P	0.065	-33	-33	-33	-33	-33	-33	-33	-33
SR-2	M_y / P	0.0513	-159	159	-159	159	-159	159	-159	159
SR-3*	N_y*T*(R_m*T)$^{0.5}$ / M_1	0.0505	0	0	0	0	-169	-169	169	169
SR-3	M_y*(R_m*T)$^{0.5}$ / M_1	0.1882	0	0	0	0	-3,767	3,767	3,767	-3,767
SR-3*	N_y*T*(R_m*T)$^{0.5}$ / M_2	0.0505	-169	-169	169	169	0	0	0	0
SR-3	M_y*(R_m*T)$^{0.5}$ / M_2	0.1882	-3,767	3,767	3,767	-3,767	0	0	0	0
Pressure stress*			18,028	18,028	18,028	18,028	18,028	18,028	18,028	18,028
Total O_y stress			13,900	21,752	21,772	14,556	13,900	21,752	21,772	14,556
Membrane O_y stress*			17,826	17,826	18,164	18,164	17,826	17,826	18,164	18,164
Shear from M_t			0	0	0	0	0	0	0	0
Shear from V_1			0	0	0	0	-78	-78	78	78
Shear from V_2			78	78	-78	-78	0	0	0	0
Total Shear stress			78	78	-78	-78	-78	-78	78	78
Combined stress (P_L+P_b+Q)			13,901	30,607	30,661	14,557	13,901	30,607	30,661	14,557
(1) * denotes primary stress. (2) The nozzle is assumed to be a rigid (solid) attachment.										

Longitudinal stress in the nozzle wall due to internal pressure + external loads

$\sigma_{n\,(Pm)} = P*R_i / (2*t_n) - P_r / (\pi*(R_o^2 - R_i^2)) + M*R_o / I$
$= 406.05*0.4795 / (2*0.1556) - 50 / (\pi*(0.6575^2 - 0.4795^2)) + 1{,}272.8*0.6575 / 0.1053$
$= 8{,}497$ psi

The average primary stress P_m (see Division 2 5.6.a.1) across the nozzle wall due to internal pressure + external loads is acceptable (≤ S = 20,000 psi)

Shear stress in the nozzle wall due to external loads

$\sigma_{shear} = (V_1^2 + V_2^2)^{0.5} / (\pi*R_i*t_n)$
$= (50^2 + 50^2)^{0.5} / (\pi*0.4795*0.178)$
$= 264$ psi

$\sigma_{torsion} = M_t / (2*\pi*R_i^2*t_n)$
$= 0 / (2*\pi*0.4795^2*0.178)$
$= 0$ psi

$\sigma_{total} = \sigma_{shear} + \sigma_{torsion}$
$= 264 + 0$
$= 264$ psi

UG-45: The total combined shear stress (264 psi) ≤ allowable ($0.7*S_n = 0.7*20{,}000 = 14{,}000$ psi)

Reinforcement Calculations for MAWP

The vessel wall thickness governs the MAWP of this nozzle.

UG-37 Area Calculation Summary (in^2)							UG-45 Summary (in)	
For P = 499.44 psi @ 180 °F							The nozzle passes UG-45	
A required	A available	A_1	A_2	A_3	A_5	A welds	t_{req}	t_{min}
This nozzle is exempt from area calculations per UG-36(c)(3)(a)							0.1174	0.1566

UG-41 Weld Failure Path Analysis Summary
The nozzle is exempt from weld strength calculations per UW-15(b)(2)

UW-16 Weld Sizing Summary			
Weld description	Required weld throat size (in)	Actual weld throat size (in)	Status
Nozzle to shell fillet (Leg_{41})	0.1246	0.1312	weld size is adequate

WRC 537												
Load Case	P (psi)	P_r (lb_f)	M_1 (lb_f-in)	V_2 (lb_f)	M_2 (lb_f-in)	V_1 (lb_f)	M_t (lb_f-in)	Max Comb Stress (psi)	Allow Comb Stress (psi)	Max Local Primary Stress (psi)	Allow Local Primary Stress (psi)	Over stressed
Load case 1	499.44	50	900	50	900	50	0	**34,807**	**60,000**	**22,618**	**30,000**	No

Calculations for internal pressure 499.44 psi @ 180 °F

Parallel Limit of reinforcement per UG-40

L_R = MAX(d, R_n + (t_n - C_n) + (t - C))
= MAX(0.959, 0.4795 + (0.179 - 0.001) + (0.3125 - 0.001))
= 0.969 in

Outer Normal Limit of reinforcement per UG-40

L_H = MIN(2.5*(t - C), 2.5*(t_n - C_n) + t_e)
= MIN(2.5*(0.3125 - 0.001), 2.5*(0.179 - 0.001) + 0)
= 0.445 in

Inner Normal Limit of reinforcement per UG-40

L_I = MIN(h, 2.5*(t - C), 2.5*(t_i - C_n - C))
= MIN(0.999, 2.5*(0.3125 - 0.001), 2.5*(0.179 - 0.001 - 0.001))
= 0.4425 in

Nozzle required thickness per UG-27(c)(1)

t_{rn} = $P*R_n / (S_n*E - 0.6*P)$
= 499.4378*0.4795 / (20,000*1 - 0.6*499.4378)
= 0.0122 in

Required thickness t_r from UG-37(a)(c)

t_r = $P*K_1*D_o / (2*S*E + 0.8*P)$
= 499.4378*0.8999*28 / (2*20,000*1 + 0.8*499.4378)
= 0.3115 in

Required thickness t_r per Interpretation VIII-1-07-50

t_r = $P*D_o*K / (2*S*E + 2*P*(K - 0.1))$
= 499.44*28*0.999903 / (2*20,000*1 + 2*499.44*(0.999903 - 0.1))
= 0.3419"

This opening does not require reinforcement per UG-36(c)(3)(a)

UW-16(c) Weld Check

Fillet weld: t_{min} = lesser of 0.75 or t_n or t = 0.178 in
$t_{c(min)}$ = lesser of 0.25 or 0.7*t_{min} = 0.1246 in
$t_{c(actual)}$ = 0.7*Leg = 0.7*0.1875 = 0.1313 in

The fillet weld size is satisfactory.

Weld strength calculations are not required for this detail which conforms to Fig. UW-16.1, sketch (c-e).

UG-45 Nozzle Neck Thickness Check

Interpretation VIII-1-83-66 has been applied.

$t_{a\ UG-27}$ = $P*R_n / (S_n*E - 0.6*P)$ + Corrosion
= 499.4521*0.4795 / (20,000*1 - 0.6*499.4521) + 0.001
= 0.0132 in

$t_{a\ UG-22}$ = 0.055 in

t_a = max[$t_{a\ UG-27}$, $t_{a\ UG-22}$]
= max[0.0132 , 0.055]
= 0.055 in

t_{b1} = 0.3429 in

t_{b1} = max[t_{b1} , $t_{b\ UG16}$]
= max[0.3429 , 0.0635]
= 0.3429 in

t_b = min[t_{b3} , t_{b1}]
= min[0.1174 , 0.3429]
= 0.1174 in

t_{UG-45} = max[t_a , t_b]
= max[0.055 , 0.1174]
= 0.1174 in

Available nozzle wall thickness new, t_n = 0.875*0.179 = 0.1566 in

The nozzle neck thickness is adequate.

WRC 537 Load case 1

Applied Loads	
Radial load, P_r	50 lb_f
Circumferential moment, M_1	900 lb_f-in
Circumferential shear, V_2	50 lb_f
Longitudinal moment, M_2	900 lb_f-in
Longitudinal shear, V_1	50 lb_f
Torsion moment, M_t	0 lb_f-in
Internal pressure, P	499.44 psi
Mean dish radius, R_m	24.8044"
Local head thickness, T	0.3115"
Design factor	3

Maximum stresses due to the applied loads at the nozzle OD (includes pressure)

U = r_o / Sqr(R_m*T) = 0.6575 / Sqr(24.8044*0.3115) = 0.237

Pressure stress intensity factor, I = 1.1222 (derived from Division 2 Part 4.5)

Local pressure stress = I*P*R_i / (2*T) =22,174 psi

Maximum combined stress (P_L+P_b+Q) = 34,807 psi
Allowable combined stress (P_L+P_b+Q) = ±3*S = ±60,000 psi

Note: The allowable combined stress (P_L+P_b+Q) is based on the strain hardening characteristics of this material.

The maximum combined stress (P_L+P_b+Q) is within allowable limits.

Maximum local primary membrane stress (P_L) = 22,618 psi
Allowable local primary membrane stress (P_L) = ±1.5*S = ±30,000 psi

The maximum local primary membrane stress (P_L) is within allowable limits.

Stresses at the nozzle OD per WRC Bulletin 537										
Figure	**Y**		**A_u**	**A_l**	**B_u**	**B_l**	**C_u**	**C_l**	**D_u**	**D_l**
SR-2*	N_x*T / P	0.214	-110	-110	-110	-110	-110	-110	-110	-110
SR-2	M_x / P	0.1703	-527	527	-527	527	-527	527	-527	527
SR-3*	N_x*T*(R_m*T)$^{0.5}$ / M_1	0.1662	0	0	0	0	-554	-554	554	554
SR-3	M_x*(R_m*T)$^{0.5}$ / M_1	0.6351	0	0	0	0	-12,715	12,715	12,715	-12,715
SR-3*	N_x*T*(R_m*T)$^{0.5}$ / M_2	0.1662	-554	-554	554	554	0	0	0	0
SR-3	M_x*(R_m*T)$^{0.5}$ / M_2	0.6351	-12,715	12,715	12,715	-12,715	0	0	0	0
Pressure stress*			22,174	22,174	22,174	22,174	22,174	22,174	22,174	22,174
Total O_x stress			8,268	34,752	34,806	10,430	8,268	34,752	34,806	10,430
Membrane O_x stress*			21,510	21,510	22,618	22,618	21,510	21,510	22,618	22,618
SR-2*	N_y*T / P	0.065	-33	-33	-33	-33	-33	-33	-33	-33
SR-2	M_y / P	0.0513	-159	159	-159	159	-159	159	-159	159
SR-3*	N_y*T*(R_m*T)$^{0.5}$ / M_1	0.0505	0	0	0	0	-169	-169	169	169
SR-3	M_y*(R_m*T)$^{0.5}$ / M_1	0.1882	0	0	0	0	-3,767	3,767	3,767	-3,767
SR-3*	N_y*T*(R_m*T)$^{0.5}$ / M_2	0.0505	-169	-169	169	169	0	0	0	0
SR-3	M_y*(R_m*T)$^{0.5}$ / M_2	0.1882	-3,767	3,767	3,767	-3,767	0	0	0	0
Pressure stress*			22,174	22,174	22,174	22,174	22,174	22,174	22,174	22,174
Total O_y stress			18,046	25,898	25,918	18,702	18,046	25,898	25,918	18,702
Membrane O_y stress*			21,972	21,972	22,310	22,310	21,972	21,972	22,310	22,310
Shear from M_t			0	0	0	0	0	0	0	0
Shear from V_1			0	0	0	0	-78	-78	78	78
Shear from V_2			78	78	-78	-78	0	0	0	0
Total Shear stress			78	78	-78	-78	-78	-78	78	78
Combined stress (P_L+P_b+Q)			18,047	34,753	34,807	18,703	18,047	34,753	34,807	18,703
(1) * denotes primary stress. (2) The nozzle is assumed to be a rigid (solid) attachment.										

Longitudinal stress in the nozzle wall due to internal pressure + external loads

$\sigma_{n\,(Pm)} = P*R_i / (2*t_n) - P_r / (\pi*(R_o^2 - R_i^2)) + M*R_o / I$
$= 499.44*0.4795 / (2*0.1556) - 50 / (\pi*(0.6575^2 - 0.4795^2)) + 1{,}272.8*0.6575 / 0.1053$
$= 8{,}641$ psi

The average primary stress P_m (see Division 2 5.6.a.1) across the nozzle wall due to internal pressure + external loads is acceptable (≤ S = 20,000 psi)

Shear stress in the nozzle wall due to external loads

$\sigma_{shear} = (V_1^2 + V_2^2)^{0.5} / (\pi*R_i*t_n)$
$= (50^2 + 50^2)^{0.5} / (\pi*0.4795*0.178)$
$= 264$ psi

$\sigma_{torsion} = M_t / (2*\pi*R_i^2*t_n)$
$= 0 / (2*\pi*0.4795^2*0.178)$
$= 0$ psi

$\sigma_{total} = \sigma_{shear} + \sigma_{torsion}$
$= 264 + 0$
$= 264$ psi

UG-45: The total combined shear stress (264 psi) ≤ allowable ($0.7*S_n = 0.7*20{,}000 = 14{,}000$ psi)

Reinforcement Calculations for MAP

The vessel wall thickness governs the MAP of this nozzle.

UG-37 Area Calculation Summary (in^2)							UG-45 Summary (in)	
For P = 501 psi @ 70 °F							The nozzle passes UG-45	
A required	A available	A_1	A_2	A_3	A_5	A welds	t_{req}	t_{min}
This nozzle is exempt from area calculations per UG-36(c)(3)(a)							0.1164	0.1566

UG-41 Weld Failure Path Analysis Summary
The nozzle is exempt from weld strength calculations per UW-15(b)(2)

UW-16 Weld Sizing Summary			
Weld description	Required weld throat size (in)	Actual weld throat size (in)	Status
Nozzle to shell fillet (Leg_{41})	0.1253	0.1312	weld size is adequate

Calculations for internal pressure 501 psi @ 70 °F

Parallel Limit of reinforcement per UG-40

L_R = MAX(d, R_n + (t_n - C_n) + (t - C))
= MAX(0.957, 0.4785 + (0.179 - 0) + (0.3125 - 0))
= 0.97 in

Outer Normal Limit of reinforcement per UG-40

L_H = MIN(2.5*(t - C), 2.5*(t_n - C_n) + t_e)
= MIN(2.5*(0.3125 - 0), 2.5*(0.179 - 0) + 0)
= 0.4475 in

Inner Normal Limit of reinforcement per UG-40

L_I = MIN(h, 2.5*(t - C), 2.5*(t_i - C_n - C))
= MIN(1, 2.5*(0.3125 - 0), 2.5*(0.179 - 0 - 0))
= 0.4475 in

Nozzle required thickness per UG-27(c)(1)

t_{rn} = P*R_n / (S_n*E - 0.6*P)
= 501.001*0.4785 / (20,000*1 - 0.6*501.001)
= 0.0122 in

Required thickness t_r from UG-37(a)(c)

t_r = $P*K_1*D_o$ / (2*S*E + 0.8*P)
= 501.001*0.9*28 / (2*20,000*1 + 0.8*501.001)
= 0.3125 in

Required thickness t_r per Interpretation VIII-1-07-50

t_r = $P*D_o*K$ / (2*S*E + 2*P*(K - 0.1))
= 501*28*1 / (2*20,000*1 + 2*501*(1 - 0.1))
= 0.343"

This opening does not require reinforcement per UG-36(c)(3)(a)

UW-16(c) Weld Check

Fillet weld: t_{min} = lesser of 0.75 or t_n or t = 0.179 in
$t_{c(min)}$ = lesser of 0.25 or 0.7*t_{min} = 0.1253 in
$t_{c(actual)}$ = 0.7*Leg = 0.7*0.1875 = 0.1313 in

The fillet weld size is satisfactory.

Weld strength calculations are not required for this detail which conforms to Fig. UW-16.1, sketch (c-e).

UG-45 Nozzle Neck Thickness Check

Interpretation VIII-1-83-66 has been applied.

$t_{a\ UG-27}$ = $P*R_n$ / (S_n*E - 0.6*P) + Corrosion
= 501.001*0.4785 / (20,000*1 - 0.6*501.001) + 0
= 0.0122 in

$t_{a\ UG-22}$ = 0.0542 in

t_a = max[$t_{a\ UG-27}$, $t_{a\ UG-22}$]
= max[0.0122 , 0.0542]
= 0.0542 in

t_{b1} = 0.343 in

t_{b1} = max[t_{b1} , $t_{b\ UG16}$]
= max[0.343 , 0.0625]
= 0.343 in

t_b = min[t_{b3} , t_{b1}]
= min[0.1164 , 0.343]
= 0.1164 in

t_{UG-45} = max[t_a , t_b]

= max[0.0542 , 0.1164]
= 0.1164 in

Available nozzle wall thickness new, t_n = 0.875*0.179 = 0.1566 in

The nozzle neck thickness is adequate.

Reinforcement Calculations for External Pressure

UG-37 Area Calculation Summary (in^2)							UG-45 Summary (in)	
For Pe = 15 psi @ 180 °F							The nozzle passes UG-45	
A required	A available	A_1	A_2	A_3	A_5	A welds	t_{req}	t_{min}
This nozzle is exempt from area calculations per UG-36(c)(3)(a)							0.0635	0.1566

UG-41 Weld Failure Path Analysis Summary
Weld strength calculations are not required for external pressure

UW-16 Weld Sizing Summary			
Weld description	Required weld throat size (in)	Actual weld throat size (in)	Status
Nozzle to shell fillet (Leg_{41})	0.1246	0.1312	weld size is adequate

Calculations for external pressure 15 psi @ 180 °F

Parallel Limit of reinforcement per UG-40

L_R = MAX(d, R_n + (t_n - C_n) + (t - C))
= MAX(0.959, 0.4795 + (0.179 - 0.001) + (0.3125 - 0.001))
= 0.969 in

Outer Normal Limit of reinforcement per UG-40

L_H = MIN(2.5*(t - C), 2.5*(t_n - C_n) + t_e)
= MIN(2.5*(0.3125 - 0.001), 2.5*(0.179 - 0.001) + 0)
= 0.445 in

Inner Normal Limit of reinforcement per UG-40

L_I = MIN(h, 2.5*(t - C), 2.5*(t_i - C_n - C))
= MIN(0.999, 2.5*(0.3125 - 0.001), 2.5*(0.179 - 0.001 - 0.001))
= 0.4425 in

Nozzle required thickness per UG-28 t_{rn} = 0.0081 in

From UG-37(d)(1) required thickness t_r = 0.0734 in

This opening does not require reinforcement per UG-36(c)(3)(a)

UW-16(c) Weld Check

Fillet weld: t_{min} = lesser of 0.75 or t_n or t = 0.178 in
$t_{c(min)}$ = lesser of 0.25 or 0.7*t_{min} = 0.1246 in
$t_{c(actual)}$ = 0.7*Leg = 0.7*0.1875 = 0.1313 in

The fillet weld size is satisfactory.

Weld strength calculations are not required for this detail which conforms to Fig. UW-16.1, sketch (c-e).

UG-45 Nozzle Neck Thickness Check

Interpretation VIII-1-83-66 has been applied.

$t_{a\ UG\text{-}28}$ = 0.0091 in

$t_{a\ UG\text{-}22}$ = 0.0481 in

t_a = max[$t_{a\ UG\text{-}28}$, $t_{a\ UG\text{-}22}$]
= max[0.0091 , 0.0481]
= 0.0481 in

t_{b2} = 0.0115 in

t_{b2} = max[t_{b2} , $t_{b\ UG16}$]
= max[0.0115 , 0.0635]
= 0.0635 in

t_b = min[t_{b3} , t_{b2}]
= min[0.1174 , 0.0635]
= 0.0635 in

$t_{UG\text{-}45}$ = max[t_a , t_b]
= max[0.0481 , 0.0635]
= 0.0635 in

Available nozzle wall thickness new, t_n = 0.875*0.179 = 0.1566 in

The nozzle neck thickness is adequate.

External Pressure, (Corroded & at 180 °F) UG-28(c)

L / D_o = 5.8328 / 1.315 = 4.4356
D_o / t = 1.315 / 0.0081 = 163.2795

From table G: A = 0.000136
From table HA-2: B = 1,836.8575 psi

P_a = 4*B / (3*(D_o / t))
= 4*1,836.86 / (3*(1.315 / 0.0081))
= 15 psi

Design thickness for external pressure P_a = 15 psi

t_a = t + Corrosion = 0.0081 + 0.001 = 0.0091"

Reinforcement Calculations for MAEP

UG-37 Area Calculation Summary (in^2)							UG-45 Summary (in)	
For Pe = 113.69 psi @ 180 °F							The nozzle passes UG-45	
A required	A available	A_1	A_2	A_3	A_5	A welds	t_{req}	t_{min}
This nozzle is exempt from area calculations per UG-36(c)(3)(a)							0.0802	0.1566

UG-41 Weld Failure Path Analysis Summary
Weld strength calculations are not required for external pressure

UW-16 Weld Sizing Summary			
Weld description	Required weld throat size (in)	Actual weld throat size (in)	Status
Nozzle to shell fillet (Leg_{41})	0.1246	0.1312	weld size is adequate

Calculations for external pressure 113.69 psi @ 180 °F

Parallel Limit of reinforcement per UG-40

L_R = MAX(d, R_n + (t_n - C_n) + (t - C))
= MAX(0.959, 0.4795 + (0.179 - 0.001) + (0.3125 - 0.001))
= 0.969 in

Outer Normal Limit of reinforcement per UG-40

L_H = MIN(2.5*(t - C), 2.5*(t_n - C_n) + t_e)
= MIN(2.5*(0.3125 - 0.001), 2.5*(0.179 - 0.001) + 0)
= 0.445 in

Inner Normal Limit of reinforcement per UG-40

L_I = MIN(h, 2.5*(t - C), 2.5*(t_i - C_n - C))
= MIN(0.999, 2.5*(0.3125 - 0.001), 2.5*(0.179 - 0.001 - 0.001))
= 0.4425 in

Nozzle required thickness per UG-28 t_{rn} = 0.0182 in

From UG-37(d)(1) required thickness t_r = 0.2692 in

This opening does not require reinforcement per UG-36(c)(3)(a)

UW-16(c) Weld Check

Fillet weld: t_{min} = lesser of 0.75 or t_n or t = 0.178 in
$t_{c(min)}$ = lesser of 0.25 or 0.7*t_{min} = 0.1246 in
$t_{c(actual)}$ = 0.7*Leg = 0.7*0.1875 = 0.1313 in

The fillet weld size is satisfactory.

Weld strength calculations are not required for this detail which conforms to Fig. UW-16.1, sketch (c-e).

UG-45 Nozzle Neck Thickness Check

Interpretation VIII-1-83-66 has been applied.

$t_{a\ UG\text{-}28}$ = 0.0192 in

$t_{a\ UG\text{-}22}$ = 0.0498 in

t_a = max[$t_{a\ UG\text{-}28}$, $t_{a\ UG\text{-}22}$]
= max[0.0192 , 0.0498]
= 0.0498 in

t_{b2} = 0.0802 in

t_{b2} = max[t_{b2} , $t_{b\ UG16}$]
= max[0.0802 , 0.0635]
= 0.0802 in

t_b = min[t_{b3} , t_{b2}]
= min[0.1174 , 0.0802]
= 0.0802 in

$t_{UG\text{-}45}$ = max[t_a , t_b]
= max[0.0498 , 0.0802]
= 0.0802 in

Available nozzle wall thickness new, t_n = 0.875*0.179 = 0.1566 in

The nozzle neck thickness is adequate.

External Pressure, (Corroded & at 180 °F) UG-28(c)

L / D_o = 5.8328 / 1.315 = 4.4356
D_o / t = 1.315 / 0.0182 = 72.2253

From table G: A = 0.000454
From table HA-2: B = 6,158.8264 psi

P_a = 4*B / (3*(D_o / t))
= 4*6,158.83 / (3*(1.315 / 0.0182))
= 113.7 psi

Design thickness for external pressure P_a = 113.7 psi

t_a = t + Corrosion = 0.0182 + 0.001 = 0.0192"

Elbow (N1)

ASME Section VIII Division 1, 2017 Edition				
Component		ASME B16.9 Elbow		
Type		Long Radius 90-deg		
Material		SA-403 316 (II-D p. 74, ln. 8)		
Pipe NPS and Schedule		NPS 1 Sch 80 (XS)		
Attached To		Inlet (N1)		
Impact Tested	**Normalized**	**Fine Grain Practice**	**PWHT**	**Optimize MDMT/ Find MAWP**
No	No	No	No	No
		Design Pressure (psi)	**Design Temperature (°F)**	**Design MDMT (°F)**
Internal		400	180	-20
External		15	180	
Static Liquid Head				
Condition		**P_s (psi)**	**H_s (in)**	**SG**
Operating		6.16	134.3505	1.27
Test horizontal		0.51	14.166	1
Dimensions				
Outer Diameter		1.315"		
Nominal Thickness		0.179"		
Minimum Thickness[1]		0.1566"		
Center-to-End, A		1.5"		
Corrosion	**Inner**	0.001"		
	Outer	0"		
Weight and Capacity				
		Weight (lb)		**Capacity (US gal)**
New		0.44		0.01
Corroded		0.43		0.01
Radiography				
Longitudinal seam		Seamless No RT		
Left Circumferential seam		Full UW-11(a) Type 1		
Right Circumferential seam		Full UW-11(a) Type 1		

[1] minimum thickness = nominal thickness times pipe tolerance factor of 0.875.

Results Summary	
Governing condition	UG-16
Minimum thickness per UG-16	0.0625" + 0.001" = 0.0635"
Design thickness due to internal pressure (t)	0.0143"
Design thickness due to external pressure (t_e)	0.0091"
Maximum allowable working pressure (MAWP)	5,222.74 psi
Maximum allowable pressure (MAP)	5,266.03 psi
Maximum allowable external pressure (MAEP)	2,444.47 psi
Rated MDMT	-320 °F

UHA-51 Material Toughness Requirements	
t_r = 454.4*0.6575 / (20,000*1 + 0.4*454.4) =	0.0148"
Stress ratio = t_r*E* / (t_n - c) = 0.0148*1 / (0.1566 - 0.001) =	0.0951
Impact test exempt per UHA-51(g) (coincident ratio = 0.0951)	
Rated MDMT =	-320°F
Material is exempt from impact testing at the Design MDMT of -20°F.	

Design thickness, (at 180 °F) Appendix 1-1

t = P*R_o / (S*E + 0.40*P) + Corrosion
= 406.16*0.6575 / (20,000*1.00 + 0.40*406.16) + 0.001
= 0.0143"

Maximum allowable working pressure, (at 180 °F) Appendix 1-1

P = S*E*t / (R_o - 0.40*t) - P_s
= 20,000*1.00*(0.179*0.875 - 0.001) / (0.6575 - 0.40*(0.179*0.875 - 0.001)) - 6.16
= 5,222.74 psi

Maximum allowable pressure, (at 70 °F) Appendix 1-1

P = S*E*t / (R_o - 0.40*t)
= 20,000*1.00*(0.179*0.875) / (0.6575 - 0.40*(0.179*0.875))
= 5,266.03 psi

External Pressure, (Corroded & at 180 °F) UG-28(c)

L / D_o = 5.8328 / 1.315 = 4.4356
D_o / t = 1.315 / 0.0081 = 163.2795

From table G: A = 0.000136
From table HA-2: B = 1,836.8575 psi

P_a = 4*B / (3*(D_o / t))
= 4*1,836.86 / (3*(1.315 / 0.0081))
= 15 psi

Design thickness for external pressure P_a = 15 psi

t_a = t + Corrosion = 0.0081 + 0.001 = 0.0091"

Maximum Allowable External Pressure, (Corroded & at 180 °F) UG-28(c)

L / D_o = 5.8328 / 1.315 = 4.4356
D_o / t = 1.315 / (0.179*0.875 - 0.001) = 8.4498

From table G: A = 0.017317
From table HA-2: B = 14,117.1448 psi
$S_y = 2*B_{(sy)}$ = 2*15,242.1997 = 30,484 psi
$S_1 = 2*S_e$ = 2*20,000 = 40,000 psi
$S_2 = 0.90*S_y$ = 0.90*30,484 = 27,436 psi
$S = \min(S_1, S_2)$ = min(40,000, 27,436) = 27,436 psi

P_{a1} = [2.167 / (D_o / t) - 0.08333]*B
= [2.167 / 8.4498 - 0.08333]*14,117
= 2,444.47 psi

P_{a2} = (2*S / (D_o / t))*[1 - 1/(D_o / t)]
= (2*27,436 / 8.4498)*[1 - 1/8.4498]
= 5,725.35 psi
Maximum Allowable External Pressure = min(P_{a1}, P_{a2}) = 2,444.47 psi

Outlet (N2)

ASME Section VIII Division 1, 2017 Edition
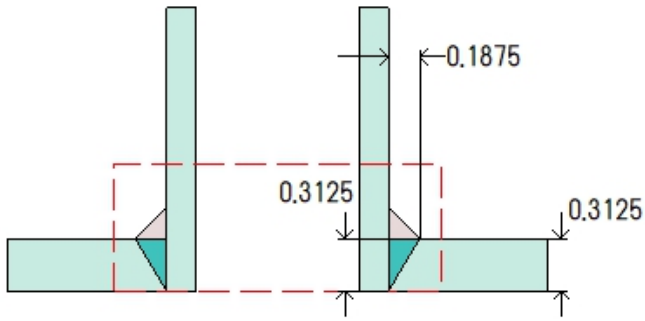
Note: round inside edges per UG-76(c)

Location and Orientation	
Located on	Ellipsoidal Head #2
Orientation	0°
End of nozzle to datum line	-12.125"
Calculated as hillside	No
Distance to head center, R	0"
Passes through a Category A joint	No
Nozzle	
Description	NPS 1 Sch 80S (XS)
Access opening	No
Material specification	SA-312 TP316 Wld & smls pipe (II-D p. 74, ln. 1)
Inside diameter, new	0.957"
Pipe nominal wall thickness	0.179"
Pipe minimum wall thickness[1]	0.1566"
Corrosion allowance	0.001"
Projection available outside vessel, Lpr	3.4766"
Local vessel minimum thickness	0.3125"
Liquid static head included	0.24 psi
Longitudinal joint efficiency	1
Welds	
Inner fillet, Leg_{41}	0.1875"
Nozzle to vessel groove weld	0.3125"

[1]Pipe minimum thickness = nominal thickness times pipe tolerance factor of 0.875.

UHA-51 Material Toughness Requirements Nozzle	
External nozzle loadings per UG-22 govern the coincident ratio used.	
Stress ratio = t_r*E^* / (t_n - c) = 0.0532*1 / (0.1566 - 0.001) =	0.3417
Impact test exempt per UHA-51(g) (coincident ratio = 0.3417)	
Rated MDMT =	-320°F
Material is exempt from impact testing at the Design MDMT of -20°F.	

Reinforcement Calculations for Internal Pressure

UG-37 Area Calculation Summary (in^2)							UG-45 Summary (in)	
For P = 400.24 psi @ 180 °F							The nozzle passes UG-45	
A required	A available	A_1	A_2	A_3	A_5	A welds	t_{req}	t_{min}
This nozzle is exempt from area calculations per UG-36(c)(3)(a)							0.1174	0.1566

UG-41 Weld Failure Path Analysis Summary
The nozzle is exempt from weld strength calculations per UW-15(b)(2)

UW-16 Weld Sizing Summary			
Weld description	Required weld throat size (in)	Actual weld throat size (in)	Status
Nozzle to shell fillet (Leg_{41})	0.1246	0.1312	weld size is adequate

WRC 537												
Load Case	P (psi)	P_r (lb_f)	M_1 (lb_f-in)	V_2 (lb_f)	M_2 (lb_f-in)	V_1 (lb_f)	M_t (lb_f-in)	Max Comb Stress (psi)	Allow Comb Stress (psi)	Max Local Primary Stress (psi)	Allow Local Primary Stress (psi)	Over stressed
Load case 1	400.24	50	900	50	900	50	0	**35,101**	**60,000**	**22,912**	**30,000**	No
Load case 1 (Hot Shut Down)	0	50	900	50	900	50	0	-13,907	60,000	-664	30,000	No

Calculations for internal pressure 400.24 psi @ 180 °F

Parallel Limit of reinforcement per UG-40

L_R = MAX(d, R_n + (t_n - C_n) + (t - C))
= MAX(0.959, 0.4795 + (0.179 - 0.001) + (0.3125 - 0.001))
= 0.969 in

Outer Normal Limit of reinforcement per UG-40

L_H = MIN(2.5*(t - C), 2.5*(t_n - C_n) + t_e)
= MIN(2.5*(0.3125 - 0.001), 2.5*(0.179 - 0.001) + 0)
= 0.445 in

Nozzle required thickness per UG-27(c)(1)

t_{rn} = P*R_n / (S_n*E - 0.6*P)
= 400.2419*0.4795 / (20,000*1 - 0.6*400.2419)
= 0.0097 in

Required thickness t_r from UG-37(a)(c)

t_r = $P*K_1*D_o$ / (2*S*E + 0.8*P)
= 400.2419*0.8999*28 / (2*20,000*1 + 0.8*400.2419)
= 0.2501 in

Required thickness t_r per Interpretation VIII-1-07-50

t_r = $P*D_o*K$ / (2*S*E + 2*P*(K - 0.1))
= 400.24*28*0.999903 / (2*20,000*1 + 2*400.24*(0.999903 - 0.1))
= 0.2752"

This opening does not require reinforcement per UG-36(c)(3)(a)

UW-16(c) Weld Check

Fillet weld: t_{min} = lesser of 0.75 or t_n or t = 0.178 in
$t_{c(min)}$ = lesser of 0.25 or 0.7*t_{min} = 0.1246 in
$t_{c(actual)}$ = 0.7*Leg = 0.7*0.1875 = 0.1313 in

The fillet weld size is satisfactory.

Weld strength calculations are not required for this detail which conforms to Fig. UW-16.1, sketch (c-e).

UG-45 Nozzle Neck Thickness Check

Interpretation VIII-1-83-66 has been applied.

$t_{a\ UG-27}$ = $P*R_n$ / (S_n*E - 0.6*P) + Corrosion
= 400.2419*0.4795 / (20,000*1 - 0.6*400.2419) + 0.001
= 0.0107 in

$t_{a\ UG-22}$ = 0.0534 in

t_a = max[$t_{a\ UG-27}$, $t_{a\ UG-22}$]
= max[0.0107 , 0.0534]
= 0.0534 in

t_{b1} = 0.2762 in

t_{b1} = max[t_{b1} , $t_{b\ UG16}$]
= max[0.2762 , 0.0635]
= 0.2762 in

t_b = min[t_{b3} , t_{b1}]
= min[0.1174 , 0.2762]
= 0.1174 in

t_{UG-45} = max[t_a , t_b]

= max[0.0534 , 0.1174]
= 0.1174 in

Available nozzle wall thickness new, t_n = 0.875*0.179 = 0.1566 in

The nozzle neck thickness is adequate.

WRC 537 Load case 1

Applied Loads	
Radial load, P_r	50 lb_f
Circumferential moment, M_1	900 lb_f-in
Circumferential shear, V_2	50 lb_f
Longitudinal moment, M_2	900 lb_f-in
Longitudinal shear, V_1	50 lb_f
Torsion moment, M_t	0 lb_f-in
Internal pressure, P	400.24 psi
Mean dish radius, R_m	24.8044"
Local head thickness, T	0.3115"
Design factor	3

Maximum stresses due to the applied loads at the nozzle OD (includes pressure)

U = r_o / Sqr(R_m*T) = 0.6575 / Sqr(24.8044*0.3115) = 0.237

Pressure stress intensity factor, I = 1.4189 (derived from Division 2 Part 4.5)

Local pressure stress = I*P*R_i / (2*T) =22,468 psi

Maximum combined stress (P_L+P_b+Q) = 35,101 psi
Allowable combined stress (P_L+P_b+Q) = ±3*S = ±60,000 psi

Note: The allowable combined stress (P_L+P_b+Q) is based on the strain hardening characteristics of this material.

The maximum combined stress (P_L+P_b+Q) is within allowable limits.

Maximum local primary membrane stress (P_L) = 22,912 psi
Allowable local primary membrane stress (P_L) = ±1.5*S = ±30,000 psi

The maximum local primary membrane stress (P_L) is within allowable limits.

Stresses at the nozzle OD per WRC Bulletin 537										
Figure	**Y**		**A_u**	**A_l**	**B_u**	**B_l**	**C_u**	**C_l**	**D_u**	**D_l**
SR-2*	N_x*T / P	0.214	-110	-110	-110	-110	-110	-110	-110	-110
SR-2	M_x / P	0.1703	-527	527	-527	527	-527	527	-527	527
SR-3*	N_x*T*(R_m*T)$^{0.5}$ / M_1	0.1662	0	0	0	0	-554	-554	554	554
SR-3	M_x*(R_m*T)$^{0.5}$ / M_1	0.6351	0	0	0	0	-12,715	12,715	12,715	-12,715
SR-3*	N_x*T*(R_m*T)$^{0.5}$ / M_2	0.1662	-554	-554	554	554	0	0	0	0
SR-3	M_x*(R_m*T)$^{0.5}$ / M_2	0.6351	-12,715	12,715	12,715	-12,715	0	0	0	0
Pressure stress*			22,468	22,468	22,468	22,468	22,468	22,468	22,468	22,468
Total O_x stress			8,562	35,046	35,100	10,724	8,562	35,046	35,100	10,724
Membrane O_x stress*			21,804	21,804	22,912	22,912	21,804	21,804	22,912	22,912
SR-2*	N_y*T / P	0.065	-33	-33	-33	-33	-33	-33	-33	-33
SR-2	M_y / P	0.0513	-159	159	-159	159	-159	159	-159	159
SR-3*	N_y*T*(R_m*T)$^{0.5}$ / M_1	0.0505	0	0	0	0	-169	-169	169	169
SR-3	M_y*(R_m*T)$^{0.5}$ / M_1	0.1882	0	0	0	0	-3,767	3,767	3,767	-3,767
SR-3*	N_y*T*(R_m*T)$^{0.5}$ / M_2	0.0505	-169	-169	169	169	0	0	0	0
SR-3	M_y*(R_m*T)$^{0.5}$ / M_2	0.1882	-3,767	3,767	3,767	-3,767	0	0	0	0
Pressure stress*			22,468	22,468	22,468	22,468	22,468	22,468	22,468	22,468
Total O_y stress			18,340	26,192	26,212	18,996	18,340	26,192	26,212	18,996
Membrane O_y stress*			22,266	22,266	22,604	22,604	22,266	22,266	22,604	22,604
Shear from M_t			0	0	0	0	0	0	0	0
Shear from V_1			0	0	0	0	-78	-78	78	78
Shear from V_2			78	78	-78	-78	0	0	0	0
Total Shear stress			78	78	-78	-78	-78	-78	78	78
Combined stress (P_L+P_b+Q)			18,341	35,047	35,101	18,997	18,341	35,047	35,101	18,997
(1) * denotes primary stress. (2) The nozzle is assumed to be a rigid (solid) attachment.										

Longitudinal stress in the nozzle wall due to internal pressure + external loads

$\sigma_{n\,(Pm)} = P*R_i / (2*t_n) - P_r / (\pi*(R_o^2 - R_i^2)) + M*R_o / I$
$= 400.24*0.4795 / (2*0.1556) - 50 / (\pi*(0.6575^2 - 0.4795^2)) + 1{,}272.8*0.6575 / 0.1053$
$= 8{,}488$ psi

The average primary stress P_m (see Division 2 5.6.a.1) across the nozzle wall due to internal pressure + external loads is acceptable (≤ S = 20,000 psi)

Shear stress in the nozzle wall due to external loads

$\sigma_{shear} = (V_1^2 + V_2^2)^{0.5} / (\pi*R_i*t_n)$
$= (50^2 + 50^2)^{0.5} / (\pi*0.4795*0.178)$
$= 264$ psi

$\sigma_{torsion} = M_t / (2*\pi*R_i^2*t_n)$
$= 0 / (2*\pi*0.4795^2*0.178)$
$= 0$ psi

$\sigma_{total} = \sigma_{shear} + \sigma_{torsion}$
$= 264 + 0$
$= 264$ psi

UG-45: The total combined shear stress (264 psi) ≤ allowable ($0.7*S_n = 0.7*20{,}000 = 14{,}000$ psi)

Reinforcement Calculations for MAWP

The vessel wall thickness governs the MAWP of this nozzle.

UG-37 Area Calculation Summary (in^2)							UG-45 Summary (in)	
For P = 499.44 psi @ 180 °F							The nozzle passes UG-45	
A required	A available	A_1	A_2	A_3	A_5	A welds	t_{req}	t_{min}
This nozzle is exempt from area calculations per UG-36(c)(3)(a)							0.1174	0.1566

UG-41 Weld Failure Path Analysis Summary
The nozzle is exempt from weld strength calculations per UW-15(b)(2)

UW-16 Weld Sizing Summary			
Weld description	Required weld throat size (in)	Actual weld throat size (in)	Status
Nozzle to shell fillet (Leg_{41})	0.1246	0.1312	weld size is adequate

WRC 537												
Load Case	P (psi)	P_r (lb_f)	M_1 (lb_f-in)	V_2 (lb_f)	M_2 (lb_f-in)	V_1 (lb_f)	M_t (lb_f-in)	Max Comb Stress (psi)	Allow Comb Stress (psi)	Max Local Primary Stress (psi)	Allow Local Primary Stress (psi)	Over stressed
Load case 1	499.44	50	900	50	900	50	0	**40,670**	**60,000**	**28,481**	**30,000**	No

Calculations for internal pressure 499.44 psi @ 180 °F

Parallel Limit of reinforcement per UG-40

L_R = MAX(d, R_n + (t_n - C_n) + (t - C))
= MAX(0.959, 0.4795 + (0.179 - 0.001) + (0.3125 - 0.001))
= 0.969 in

Outer Normal Limit of reinforcement per UG-40

L_H = MIN(2.5*(t - C), 2.5*(t_n - C_n) + t_e)
= MIN(2.5*(0.3125 - 0.001), 2.5*(0.179 - 0.001) + 0)
= 0.445 in

Nozzle required thickness per UG-27(c)(1)

t_{rn} = P*R_n / (S_n*E - 0.6*P)
= 499.4393*0.4795 / (20,000*1 - 0.6*499.4393)
= 0.0122 in

Required thickness t_r from UG-37(a)(c)

t_r = $P*K_1*D_o$ / (2*S*E + 0.8*P)
= 499.4393*0.8999*28 / (2*20,000*1 + 0.8*499.4393)
= 0.3115 in

Required thickness t_r per Interpretation VIII-1-07-50

t_r = $P*D_o*K$ / (2*S*E + 2*P*(K - 0.1))
= 499.44*28*0.999903 / (2*20,000*1 + 2*499.44*(0.999903 - 0.1))
= 0.3419"

This opening does not require reinforcement per UG-36(c)(3)(a)

UW-16(c) Weld Check

Fillet weld: t_{min} = lesser of 0.75 or t_n or t = 0.178 in
$t_{c(min)}$ = lesser of 0.25 or 0.7*t_{min} = 0.1246 in
$t_{c(actual)}$ = 0.7*Leg = 0.7*0.1875 = 0.1313 in

The fillet weld size is satisfactory.

Weld strength calculations are not required for this detail which conforms to Fig. UW-16.1, sketch (c-e).

UG-45 Nozzle Neck Thickness Check

Interpretation VIII-1-83-66 has been applied.

$t_{a\ UG-27}$ = $P*R_n$ / (S_n*E - 0.6*P) + Corrosion
= 499.4393*0.4795 / (20,000*1 - 0.6*499.4393) + 0.001
= 0.0132 in

$t_{a\ UG-22}$ = 0.055 in

t_a = max[$t_{a\ UG-27}$, $t_{a\ UG-22}$]
= max[0.0132 , 0.055]
= 0.055 in

t_{b1} = 0.3429 in

t_{b1} = max[t_{b1} , $t_{b\ UG16}$]
= max[0.3429 , 0.0635]
= 0.3429 in

t_b = min[t_{b3} , t_{b1}]
= min[0.1174 , 0.3429]
= 0.1174 in

t_{UG-45} = max[t_a , t_b]

= max[0.055 , 0.1174]
= 0.1174 in

Available nozzle wall thickness new, t_n = 0.875*0.179 = 0.1566 in

The nozzle neck thickness is adequate.

WRC 537 Load case 1

Applied Loads	
Radial load, P_r	50 lb_f
Circumferential moment, M_1	900 lb_f-in
Circumferential shear, V_2	50 lb_f
Longitudinal moment, M_2	900 lb_f-in
Longitudinal shear, V_1	50 lb_f
Torsion moment, M_t	0 lb_f-in
Internal pressure, P	499.44 psi
Mean dish radius, R_m	24.8044"
Local head thickness, T	0.3115"
Design factor	3

Maximum stresses due to the applied loads at the nozzle OD (includes pressure)

U = r_o / Sqr(R_m*T) = 0.6575 / Sqr(24.8044*0.3115) = 0.237

Pressure stress intensity factor, I = 1.4189 (derived from Division 2 Part 4.5)

Local pressure stress = I*P*R_i / (2*T) =28,037 psi

Maximum combined stress (P_L+P_b+Q) = 40,670 psi
Allowable combined stress (P_L+P_b+Q) = ±3*S = ±60,000 psi

Note: The allowable combined stress (P_L+P_b+Q) is based on the strain hardening characteristics of this material.

The maximum combined stress (P_L+P_b+Q) is within allowable limits.

Maximum local primary membrane stress (P_L) = 28,481 psi
Allowable local primary membrane stress (P_L) = ±1.5*S = ±30,000 psi

The maximum local primary membrane stress (P_L) is within allowable limits.

Stresses at the nozzle OD per WRC Bulletin 537										
Figure	**Y**		**A_u**	**A_l**	**B_u**	**B_l**	**C_u**	**C_l**	**D_u**	**D_l**
SR-2*	N_x*T / P	0.214	-110	-110	-110	-110	-110	-110	-110	-110
SR-2	M_x / P	0.1703	-527	527	-527	527	-527	527	-527	527
SR-3*	N_x*T*(R_m*T)$^{0.5}$ / M_1	0.1662	0	0	0	0	-554	-554	554	554
SR-3	M_x*(R_m*T)$^{0.5}$ / M_1	0.6351	0	0	0	0	-12,715	12,715	12,715	-12,715
SR-3*	N_x*T*(R_m*T)$^{0.5}$ / M_2	0.1662	-554	-554	554	554	0	0	0	0
SR-3	M_x*(R_m*T)$^{0.5}$ / M_2	0.6351	-12,715	12,715	12,715	-12,715	0	0	0	0
Pressure stress*			28,037	28,037	28,037	28,037	28,037	28,037	28,037	28,037
Total O_x stress			14,131	40,615	40,669	16,293	14,131	40,615	40,669	16,293
Membrane O_x stress*			27,373	27,373	28,481	28,481	27,373	27,373	28,481	28,481
SR-2*	N_y*T / P	0.065	-33	-33	-33	-33	-33	-33	-33	-33
SR-2	M_y / P	0.0513	-159	159	-159	159	-159	159	-159	159
SR-3*	N_y*T*(R_m*T)$^{0.5}$ / M_1	0.0505	0	0	0	0	-169	-169	169	169
SR-3	M_y*(R_m*T)$^{0.5}$ / M_1	0.1882	0	0	0	0	-3,767	3,767	3,767	-3,767
SR-3*	N_y*T*(R_m*T)$^{0.5}$ / M_2	0.0505	-169	-169	169	169	0	0	0	0
SR-3	M_y*(R_m*T)$^{0.5}$ / M_2	0.1882	-3,767	3,767	3,767	-3,767	0	0	0	0
Pressure stress*			28,037	28,037	28,037	28,037	28,037	28,037	28,037	28,037
Total O_y stress			23,909	31,761	31,781	24,565	23,909	31,761	31,781	24,565
Membrane O_y stress*			27,835	27,835	28,173	28,173	27,835	27,835	28,173	28,173
Shear from M_t			0	0	0	0	0	0	0	0
Shear from V_1			0	0	0	0	-78	-78	78	78
Shear from V_2			78	78	-78	-78	0	0	0	0
Total Shear stress			78	78	-78	-78	-78	-78	78	78
Combined stress (P_L+P_b+Q)			23,910	40,616	40,670	24,566	23,910	40,616	40,670	24,566
(1) * denotes primary stress. (2) The nozzle is assumed to be a rigid (solid) attachment.										

Longitudinal stress in the nozzle wall due to internal pressure + external loads

$\sigma_{n\,(Pm)} = P*R_i / (2*t_n) - P_r / (\pi*(R_o^2 - R_i^2)) + M*R_o / I$
$= 499.44*0.4795 / (2*0.1556) - 50 / (\pi*(0.6575^2 - 0.4795^2)) + 1{,}272.8*0.6575 / 0.1053$
= 8,641 psi

The average primary stress P_m (see Division 2 5.6.a.1) across the nozzle wall due to internal pressure + external loads is acceptable (≤ S = 20,000 psi)

Shear stress in the nozzle wall due to external loads

$\sigma_{shear} = (V_1^2 + V_2^2)^{0.5} / (\pi*R_i*t_n)$
$= (50^2 + 50^2)^{0.5} / (\pi*0.4795*0.178)$
= 264 psi

$\sigma_{torsion} = M_t / (2*\pi*R_i^2*t_n)$
$= 0 / (2*\pi*0.4795^2*0.178)$
= 0 psi

$\sigma_{total} = \sigma_{shear} + \sigma_{torsion}$
= 264 + 0
= 264 psi

UG-45: The total combined shear stress (264 psi) ≤ allowable ($0.7*S_n = 0.7*20{,}000 = 14{,}000$ psi)

Reinforcement Calculations for MAP

The vessel wall thickness governs the MAP of this nozzle.

UG-37 Area Calculation Summary (in^2)							UG-45 Summary (in)	
For P = 501 psi @ 70 °F							The nozzle passes UG-45	
A required	A available	A_1	A_2	A_3	A_5	A welds	t_{req}	t_{min}
This nozzle is exempt from area calculations per UG-36(c)(3)(a)							0.1164	0.1566

UG-41 Weld Failure Path Analysis Summary
The nozzle is exempt from weld strength calculations per UW-15(b)(2)

UW-16 Weld Sizing Summary			
Weld description	Required weld throat size (in)	Actual weld throat size (in)	Status
Nozzle to shell fillet (Leg_{41})	0.1253	0.1312	weld size is adequate

Calculations for internal pressure 501 psi @ 70 °F

Parallel Limit of reinforcement per UG-40

L_R = MAX(d, R_n + (t_n - C_n) + (t - C))
= MAX(0.957, 0.4785 + (0.179 - 0) + (0.3125 - 0))
= 0.97 in

Outer Normal Limit of reinforcement per UG-40

L_H = MIN(2.5*(t - C), 2.5*(t_n - C_n) + t_e)
= MIN(2.5*(0.3125 - 0), 2.5*(0.179 - 0) + 0)
= 0.4475 in

Nozzle required thickness per UG-27(c)(1)

t_{rn} = P*R_n / (S_n*E - 0.6*P)
= 501.001*0.4785 / (20,000*1 - 0.6*501.001)
= 0.0122 in

Required thickness t_r from UG-37(a)(c)

t_r = P*K_1*D_o / (2*S*E + 0.8*P)
= 501.001*0.9*28 / (2*20,000*1 + 0.8*501.001)
= 0.3125 in

Required thickness t_r per Interpretation VIII-1-07-50

t_r = $P*D_o*K / (2*S*E + 2*P*(K - 0.1))$
= 501*28*1 / (2*20,000*1 + 2*501*(1 - 0.1))
= 0.343"

This opening does not require reinforcement per UG-36(c)(3)(a)

UW-16(c) Weld Check

Fillet weld: t_{min} = lesser of 0.75 or t_n or t = 0.179 in
$t_{c(min)}$ = lesser of 0.25 or $0.7*t_{min}$ = 0.1253 in
$t_{c(actual)}$ = 0.7*Leg = 0.7*0.1875 = 0.1313 in

The fillet weld size is satisfactory.

Weld strength calculations are not required for this detail which conforms to Fig. UW-16.1, sketch (c-e).

UG-45 Nozzle Neck Thickness Check

Interpretation VIII-1-83-66 has been applied.

$t_{a\ UG-27}$ = $P*R_n / (S_n*E - 0.6*P)$ + Corrosion
= 501.001*0.4785 / (20,000*1 - 0.6*501.001) + 0
= 0.0122 in

$t_{a\ UG-22}$ = 0.0542 in

t_a = max[$t_{a\ UG-27}$, $t_{a\ UG-22}$]
= max[0.0122 , 0.0542]
= 0.0542 in

t_{b1} = 0.343 in

t_{b1} = max[t_{b1} , $t_{b\ UG16}$]
= max[0.343 , 0.0625]
= 0.343 in

t_b = min[t_{b3} , t_{b1}]
= min[0.1164 , 0.343]
= 0.1164 in

t_{UG-45} = max[t_a , t_b]
= max[0.0542 , 0.1164]
= 0.1164 in

Available nozzle wall thickness new, t_n = 0.875*0.179 = 0.1566 in

The nozzle neck thickness is adequate.

Reinforcement Calculations for External Pressure

UG-37 Area Calculation Summary (in^2)							UG-45 Summary (in)	
For Pe = 15 psi @ 180 °F							The nozzle passes UG-45	
A required	A available	A_1	A_2	A_3	A_5	A welds	t_{req}	t_{min}
This nozzle is exempt from area calculations per UG-36(c)(3)(a)							0.0635	0.1566

UG-41 Weld Failure Path Analysis Summary
Weld strength calculations are not required for external pressure

UW-16 Weld Sizing Summary			
Weld description	Required weld throat size (in)	Actual weld throat size (in)	Status
Nozzle to shell fillet (Leg_{41})	0.1246	0.1312	weld size is adequate

Calculations for external pressure 15 psi @ 180 °F

Parallel Limit of reinforcement per UG-40

L_R = MAX(d, R_n + (t_n - C_n) + (t - C))
= MAX(0.959, 0.4795 + (0.179 - 0.001) + (0.3125 - 0.001))
= 0.969 in

Outer Normal Limit of reinforcement per UG-40

L_H = MIN(2.5*(t - C), 2.5*(t_n - C_n) + t_e)
= MIN(2.5*(0.3125 - 0.001), 2.5*(0.179 - 0.001) + 0)
= 0.445 in

Nozzle required thickness per UG-28 t_{rn} = 0.0081 in

From UG-37(d)(1) required thickness t_r = 0.0734 in

This opening does not require reinforcement per UG-36(c)(3)(a)

UW-16(c) Weld Check

Fillet weld: t_{min} = lesser of 0.75 or t_n or t = 0.178 in
$t_{c(min)}$ = lesser of 0.25 or 0.7*t_{min} = 0.1246 in
$t_{c(actual)}$ = 0.7*Leg = 0.7*0.1875 = 0.1313 in

The fillet weld size is satisfactory.

Weld strength calculations are not required for this detail which conforms to Fig. UW-16.1, sketch (c-e).

UG-45 Nozzle Neck Thickness Check

Interpretation VIII-1-83-66 has been applied.

$t_{a\ UG\text{-}28}$ = 0.0091 in

$t_{a\ UG\text{-}22}$ = 0.0481 in

t_a = max[$t_{a\ UG\text{-}28}$, $t_{a\ UG\text{-}22}$]
= max[0.0091 , 0.0481]
= 0.0481 in

t_{b2} = 0.0115 in

t_{b2} = max[t_{b2} , $t_{b\ UG16}$]
= max[0.0115 , 0.0635]
= 0.0635 in

t_b = min[t_{b3} , t_{b2}]
= min[0.1174 , 0.0635]
= 0.0635 in

$t_{UG\text{-}45}$ = max[t_a , t_b]
= max[0.0481 , 0.0635]
= 0.0635 in

Available nozzle wall thickness new, t_n = 0.875*0.179 = 0.1566 in

The nozzle neck thickness is adequate.

External Pressure, (Corroded & at 180 °F) UG-28(c)

L / D_o = 5.8328 / 1.315 = 4.4356
D_o / t = 1.315 / 0.0081 = 163.2795

From table G: A = 0.000136
From table HA-2: B = 1,836.8575 psi

P_a = 4*B / (3*(D_o / t))
= 4*1,836.86 / (3*(1.315 / 0.0081))
= 15 psi

Design thickness for external pressure P_a = 15 psi

t_a = t + Corrosion = 0.0081 + 0.001 = 0.0091"

Reinforcement Calculations for MAEP

UG-37 Area Calculation Summary (in^2)							UG-45 Summary (in)	
For Pe = 113.69 psi @ 180 °F							The nozzle passes UG-45	
A required	A available	A_1	A_2	A_3	A_5	A welds	t_{req}	t_{min}
This nozzle is exempt from area calculations per UG-36(c)(3)(a)							0.0802	0.1566

UG-41 Weld Failure Path Analysis Summary
Weld strength calculations are not required for external pressure

UW-16 Weld Sizing Summary			
Weld description	Required weld throat size (in)	Actual weld throat size (in)	Status
Nozzle to shell fillet (Leg_{41})	0.1246	0.1312	weld size is adequate

Calculations for external pressure 113.69 psi @ 180 °F

Parallel Limit of reinforcement per UG-40

L_R = MAX(d, R_n + (t_n - C_n) + (t - C))
= MAX(0.959, 0.4795 + (0.179 - 0.001) + (0.3125 - 0.001))
= 0.969 in

Outer Normal Limit of reinforcement per UG-40

L_H = MIN(2.5*(t - C), 2.5*(t_n - C_n) + t_e)
= MIN(2.5*(0.3125 - 0.001), 2.5*(0.179 - 0.001) + 0)
= 0.445 in

Nozzle required thickness per UG-28 t_{rn} = 0.0182 in

From UG-37(d)(1) required thickness t_r = 0.2692 in

This opening does not require reinforcement per UG-36(c)(3)(a)

UW-16(c) Weld Check

Fillet weld: t_{min} = lesser of 0.75 or t_n or t = 0.178 in
$t_{c(min)}$ = lesser of 0.25 or 0.7*t_{min} = 0.1246 in
$t_{c(actual)}$ = 0.7*Leg = 0.7*0.1875 = 0.1313 in

The fillet weld size is satisfactory.

Weld strength calculations are not required for this detail which conforms to Fig. UW-16.1, sketch (c-e).

UG-45 Nozzle Neck Thickness Check

Interpretation VIII-1-83-66 has been applied.

$t_{a\ UG\text{-}28}$ = 0.0192 in

$t_{a\ UG\text{-}22}$ = 0.0498 in

t_a = max[$t_{a\ UG\text{-}28}$, $t_{a\ UG\text{-}22}$]
= max[0.0192 , 0.0498]
= 0.0498 in

t_{b2} = 0.0802 in

t_{b2} = max[t_{b2} , $t_{b\ UG16}$]
= max[0.0802 , 0.0635]
= 0.0802 in

t_b = min[t_{b3} , t_{b2}]
= min[0.1174 , 0.0802]
= 0.0802 in

$t_{UG\text{-}45}$ = max[t_a , t_b]
= max[0.0498 , 0.0802]
= 0.0802 in

Available nozzle wall thickness new, t_n = 0.875*0.179 = 0.1566 in

The nozzle neck thickness is adequate.

External Pressure, (Corroded & at 180 °F) UG-28(c)

L / D_o = 5.8328 / 1.315 = 4.4356
D_o / t = 1.315 / 0.0182 = 72.2253

From table G: A = 0.000454
From table HA-2: B = 6,158.8264 psi

P_a = 4*B / (3*(D_o / t))
= 4*6,158.83 / (3*(1.315 / 0.0182))
= 113.7 psi

Design thickness for external pressure P_a = 113.7 psi

t_a = t + Corrosion = 0.0182 + 0.001 = 0.0192"

Elbow (N2)

ASME Section VIII Division 1, 2017 Edition				
Component		ASME B16.9 Elbow		
Type		Long Radius 90-deg		
Material		SA-403 316 (II-D p. 74, ln. 8)		
Pipe NPS and Schedule		NPS 1 Sch 80 (XS)		
Attached To		Outlet (N2)		
Impact Tested	**Normalized**	**Fine Grain Practice**	**PWHT**	**Optimize MDMT/ Find MAWP**
No	No	No	No	No
		Design Pressure (psi)	**Design Temperature (°F)**	**Design MDMT (°F)**
Internal		400	180	-20
External		15	180	
Static Liquid Head				
Condition		**P_s (psi)**	**H_s (in)**	**SG**
Operating		0.07	1.496	1.27
Test horizontal		0.55	15.1875	1
Dimensions				
Outer Diameter		1.315"		
Nominal Thickness		0.179"		
Minimum Thickness[1]		0.1566"		
Center-to-End, A		1.5"		
Corrosion	**Inner**	0.001"		
	Outer	0"		
Weight and Capacity				
		Weight (lb)		**Capacity (US gal)**
New		0.44		0.01
Corroded		0.43		0.01
Radiography				
Longitudinal seam		Seamless No RT		
Left Circumferential seam		Full UW-11(a) Type 1		
Right Circumferential seam		Full UW-11(a) Type 1		

[1] minimum thickness = nominal thickness times pipe tolerance factor of 0.875.

Results Summary	
Governing condition	UG-16
Minimum thickness per UG-16	0.0625" + 0.001" = 0.0635"
Design thickness due to internal pressure (t)	0.0141"
Design thickness due to external pressure (t_e)	0.0091"
Maximum allowable working pressure (MAWP)	5,228.83 psi
Maximum allowable pressure (MAP)	5,266.03 psi
Maximum allowable external pressure (MAEP)	2,444.47 psi
Rated MDMT	-320 °F

UHA-51 Material Toughness Requirements	
t_r = 448.31*0.6575 / (20,000*1 + 0.4*448.31) =	0.0146"
Stress ratio = t_r*E* / (t_n - c) = 0.0146*1 / (0.1566 - 0.001) =	0.0939
Impact test exempt per UHA-51(g) (coincident ratio = 0.0939)	
Rated MDMT =	-320°F
Material is exempt from impact testing at the Design MDMT of -20°F.	

Design thickness, (at 180 °F) Appendix 1-1

t = P*R_o / (S*E + 0.40*P) + Corrosion
= 400.07*0.6575 / (20,000*1.00 + 0.40*400.07) + 0.001
= 0.0141"

Maximum allowable working pressure, (at 180 °F) Appendix 1-1

P = S*E*t / (R_o - 0.40*t) - P_s
= 20,000*1.00*(0.179*0.875 - 0.001) / (0.6575 - 0.40*(0.179*0.875 - 0.001)) - 0.07
= 5,228.83 psi

Maximum allowable pressure, (at 70 °F) Appendix 1-1

P = S*E*t / (R_o - 0.40*t)
= 20,000*1.00*(0.179*0.875) / (0.6575 - 0.40*(0.179*0.875))
= 5,266.03 psi

External Pressure, (Corroded & at 180 °F) UG-28(c)

L / D_o = 5.8328 / 1.315 = 4.4356
D_o / t = 1.315 / 0.0081 = 163.2795

From table G: A = 0.000136
From table HA-2: B = 1,836.8575 psi

P_a = 4*B / (3*(D_o / t))
= 4*1,836.86 / (3*(1.315 / 0.0081))
= 15 psi

Design thickness for external pressure P_a = 15 psi

t_a = t + Corrosion = 0.0081 + 0.001 = 0.0091"

Maximum Allowable External Pressure, (Corroded & at 180 °F) UG-28(c)

L / D_o = 5.8328 / 1.315 = 4.4356
D_o / t = 1.315 / (0.179*0.875 - 0.001) = 8.4498

From table G: A = 0.017317
From table HA-2: B = 14,117.1448 psi
$S_y = 2*B_{(sy)}$ = 2*15,242.1997 = 30,484 psi
$S_1 = 2*S_e$ = 2*20,000 = 40,000 psi
$S_2 = 0.90*S_y$ = 0.90*30,484 = 27,436 psi
$S = \min(S_1, S_2)$ = min(40,000, 27,436) = 27,436 psi

P_{a1} = [2.167 / (D_o / t) - 0.08333]*B
= [2.167 / 8.4498 - 0.08333]*14,117
= 2,444.47 psi

P_{a2} = (2*S / (D_o / t))*[1 - 1/(D_o / t)]
= (2*27,436 / 8.4498)*[1 - 1/8.4498]
= 5,725.35 psi
Maximum Allowable External Pressure = min(P_{a1}, P_{a2}) = 2,444.47 psi

Seismic Code

Building Code: ASCE 7-10 ground supported		
Site Class		D
Importance Factor, I_e		1.5000
Spectral Response Acceleration at short period (% g), S_s		73.50%
Spectral Response Acceleration at period of 1 sec (% g), S_1		17.30%
Response Modification Coeficient from Table 15.4-2, R		2.0000
Acceleration-based Site Coefficient, F_a		1.2120
Velocity-based Site Coefficient, F_v		2.1080
Long-period Transition Period, T_L		16.0000
Redundancy factor, ρ		1.0000
Risk Category (Table 1.5-1)		IV
User Defined Vertical Accelerations Considered		Yes
Force Multiplier		0.4190
Minimum Weight Multiplier		0.2000
Hazardous, toxic, or explosive contents		No
Vessel Characteristics		
Height		10.8285 ft
Weight	Operating, Corroded	4,807 lb
	Empty, Corroded	1,629 lb
	Vacuum, Corroded	4,807 lb
Period of Vibration Calculation		
Fundamental Period, T	Operating, Corroded	0.037 sec (f = 27.3 Hz)
	Empty, Corroded	0.023 sec (f = 43.1 Hz)
	Vacuum, Corroded	0.037 sec (f = 27.3 Hz)

The fundamental period of vibration T (above) is calculated using the Rayleigh method of approximation

$T = 2 * PI * Sqr(\{Sum(W_i * y_i^2)\} / \{g * Sum(W_i * y_i)\})$, where

W_i is the weight of the ith lumped mass, and
y_i is its deflection when the system is treated as a cantilever beam.

12.4.2.3 Basic Load Combinations for Allowable Stress Design		
Load combinations considered in accordance with ASCE section 2.4.1:		
5.	$D + P + P_s + 0.7E$	$= (1.0 + V_{Accel})D + P + P_s + 0.7\rho Q_E$
8.	$0.6D + P + P_s + 0.7E$	$= (0.6 - V_{Accel})D + P + P_s + 0.7\rho Q_E$
Parameter description		
D	= Dead load	
P	= Internal or external pressure load	
P_s	= Static head load	
E	= Seismic load	$= \rho Q_E$
V_{Accel}	= User defined vertical acceleration	

Seismic Shear Reports:

Operating, Corroded
Empty, Corroded
Vacuum, Corroded
Base Shear Calculations

Seismic Shear Report: Operating, Corroded					
Component	**Elevation of Bottom above Base (in)**	**Elastic Modulus E (10^6 psi)**	**Inertia I (ft^4)**	**Seismic Shear at Bottom (lb_f)**	**Bending Moment at Bottom (lb_f-ft)**
Ellipsoidal Head #2	121.2856	27.6	*	87	27
Cylinder #1	14.6606	27.6	0.1494	890	5,613
Ellipsoidal Head #1 (top)	9.25	27.6	*	897	6,016
Support Skirt #1	0	27.6	0.09367	3,379	7,595
*Moment of Inertia I varies over the length of the component					

Seismic Shear Report: Empty, Corroded					
Component	**Elevation of Bottom above Base (in)**	**Elastic Modulus E (10^6 psi)**	**Inertia I (ft^4)**	**Seismic Shear at Bottom (lb_f)**	**Bending Moment at Bottom (lb_f-ft)**
Ellipsoidal Head #2	121.2856	28.3	*	31	11
Cylinder #1	14.6606	28.3	0.1494	301	2,100
Ellipsoidal Head #1 (top)	9.25	28.3	*	303	2,236
Support Skirt #1	0	28.3	0.09367	2,785	3,357
*Moment of Inertia I varies over the length of the component					

Seismic Shear Report: Vacuum, Corroded					
Component	**Elevation of Bottom above Base (in)**	**Elastic Modulus E (10^6 psi)**	**Inertia I (ft^4)**	**Seismic Shear at Bottom (lb_f)**	**Bending Moment at Bottom (lb_f-ft)**
Ellipsoidal Head #2	121.2856	27.6	*	87	27
Cylinder #1	14.6606	27.6	0.1494	890	5,613
Ellipsoidal Head #1 (top)	9.25	27.6	*	897	6,016
Support Skirt #1	0	27.6	0.09367	3,379	7,595
*Moment of Inertia I varies over the length of the component					

11.4.3: Maximum considered earthquake spectral response acceleration

The maximum considered earthquake spectral response acceleration at short period, S_{MS}
$S_{MS} = F_a * S_s = 1.2120 * 73.50 / 100 = 0.8908$
The maximum considered earthquake spectral response acceleration at 1 s period, S_{M1}
$S_{M1} = F_v * S_1 = 2.1080 * 17.30 / 100 = 0.3647$

11.4.4: Design spectral response acceleration parameters

Design earthquake spectral response acceleration at short period, S_{DS}
$S_{DS} = 2 / 3 * S_{MS} = 2 / 3 * 0.8908 = 0.5939$
Design earthquake spectral response acceleration at 1 s period, S_{D1}
$S_{D1} = 2 / 3 * S_{M1} = 2 / 3 * 0.3647 = 0.2431$

11.6 Seismic Design Category

The Risk Category is IV.
From Table 11.6-1, the Seismic Design Category based on S_{Ds} = 0.5939 is D.
From Table 11.6-2, the Seismic Design Category based on S_{D1} = 0.2431 is D.
This vessel is assigned to Seismic Design Category D.

User Defined Vertical Acceleration Term, V_{Accel}				
Factor is applied to dead load.				
Compressive Side:		= 1.0 + V_{Accel}		
Tensile Side:		= 0.6 - V_{Accel}		
V_{Accel} Term is: greater of (Force Mult * Base Shear / Weight) or (Min. Weight Mult.)				
Force multiplier = 0.4190		Minimum Weight Multiplier = 0.2000		
Condition	**Base Shear (lb_f)**	**Weight (lb)**	**Force Mult * Shear / Weight**	**V_{Accel}**
Operating, Corroded	899	4,807.2	0.0784	0.2
Operating, New	900	4,810	0.0784	0.2
Empty, Corroded	305	1,629.2	0.0784	0.2
Empty, New	305	1,632.5	0.0784	0.2
Vacuum, Corroded	899	4,807.2	0.0784	0.2

Note: Seismic base shears used in calculation of V_{Accel} Term do not include lateral forces.

Base Shear Calculations

Operating, Corroded
Empty, Corroded
Vacuum, Corroded

Base Shear Calculations: Operating, Corroded

Paragraph 15.4.2: T < 0.06, so:
V = 0.30 * S_{DS} * W * I_e
= 0.30 * 0.5939 * 4,807.2476 * 1.5000
= 1,284.72 lb

12.4.2.1 Seismic Load Combinations: Horizontal Seismic Load Effect, E_h
Q_E = V
E_h = 0.7 * ρ * Q_E (Only 70% of seismic load considered as per Section 2.4.1)
= 0.7 * 1.0000 * 1,284.72
= 899.30 lb

Base Shear Calculations: Empty, Corroded

Paragraph 15.4.2: T < 0.06, so:
V = 0.30 * S_{DS} * W * I_e
= 0.30 * 0.5939 * 1,629.2180 * 1.5000
= 435.40 lb

12.4.2.1 Seismic Load Combinations: Horizontal Seismic Load Effect, E_h
Q_E = V
E_h = 0.7 * ρ * Q_E (Only 70% of seismic load considered as per Section 2.4.1)
= 0.7 * 1.0000 * 435.40
= 304.78 lb

Base Shear Calculations: Vacuum, Corroded

Paragraph 15.4.2: T < 0.06, so:
V = 0.30 * S_{DS} * W * I_e
= 0.30 * 0.5939 * 4,807.2476 * 1.5000
= 1,284.72 lb

12.4.2.1 Seismic Load Combinations: Horizontal Seismic Load Effect, E_h
Q_E = V
E_h = 0.7 * ρ * Q_E (Only 70% of seismic load considered as per Section 2.4.1)
= 0.7 * 1.0000 * 1,284.72
= 899.30 lb

Seismic Code for Buckling Check

Building Code: ASCE 7-10 ground supported		
Site Class		D
Importance Factor, I_e		1.5000
Spectral Response Acceleration at short period (% g), S_s		73.50%
Spectral Response Acceleration at period of 1 sec (% g), S_1		17.30%
Response Modification Coeficient from Table 15.4-2, R		2.0000
Acceleration-based Site Coefficient, F_a		1.2120
Velocity-based Site Coefficient, F_v		2.1080
Long-period Transition Period, T_L		16.0000
Redundancy factor, ρ		1.0000
Risk Category (Table 1.5-1)		IV
User Defined Vertical Accelerations Considered		Yes
Force Multiplier		0.4190
Minimum Weight Multiplier		0.2000
Hazardous, toxic, or explosive contents		No
Vessel Characteristics		
Height		10.8285 ft
Weight	Operating, Corroded	4,807 lb
	Empty, Corroded	1,629 lb
	Vacuum, Corroded	4,807 lb
Period of Vibration Calculation		
Fundamental Period, T	Operating, Corroded	0.037 sec (f = 27.3 Hz)
	Empty, Corroded	0.023 sec (f = 43.1 Hz)
	Vacuum, Corroded	0.037 sec (f = 27.3 Hz)

The fundamental period of vibration T (above) is calculated using the Rayleigh method of approximation

$T = 2 * PI * Sqr(\{Sum(W_i * y_i^2)\} / \{g * Sum(W_i * y_i)\})$, where

W_i is the weight of the ith lumped mass, and
y_i is its deflection when the system is treated as a cantilever beam.

12.4.2.3 Basic Load Combinations for Allowable Stress Design		
Load combinations considered in accordance with ASCE section 2.4.1:		
5.	$D + P + P_s + 0.7E$	$= (1.0 + V_{Accel})D + P + P_s + 0.7\rho Q_E$
8.	$0.6D + P + P_s + 0.7E$	$= (0.6 - V_{Accel})D + P + P_s + 0.7\rho Q_E$
Parameter description		
D	= Dead load	
P	= Internal or external pressure load	
P_s	= Static head load	
E	= Seismic load	$= \rho Q_E$
V_{Accel}	= User defined vertical acceleration	

Seismic Shear Reports:

Operating, Corroded
Empty, Corroded
Vacuum, Corroded
Base Shear Calculations

Seismic Shear Report: Operating, Corroded					
Component	**Elevation of Bottom above Base (in)**	**Elastic Modulus E (10^6 psi)**	**Inertia I (ft^4)**	**Seismic Shear at Bottom (lb_f)**	**Bending Moment at Bottom (lb_f-ft)**
Ellipsoidal Head #2	121.2856	27.6	*	124	38
Cylinder #1	14.6606	27.6	0.1494	1,272	8,019
Ellipsoidal Head #1 (top)	9.25	27.6	*	1,281	8,595
Support Skirt #1	0	27.6	0.09367	3,765	10,470
*Moment of Inertia I varies over the length of the component					

Seismic Shear Report: Empty, Corroded					
Component	**Elevation of Bottom above Base (in)**	**Elastic Modulus E (10^6 psi)**	**Inertia I (ft^4)**	**Seismic Shear at Bottom (lb_f)**	**Bending Moment at Bottom (lb_f-ft)**
Ellipsoidal Head #2	121.2856	28.3	*	44	16
Cylinder #1	14.6606	28.3	0.1494	430	3,000
Ellipsoidal Head #1 (top)	9.25	28.3	*	433	3,195
Support Skirt #1	0	28.3	0.09367	2,915	4,416
*Moment of Inertia I varies over the length of the component					

Seismic Shear Report: Vacuum, Corroded					
Component	**Elevation of Bottom above Base (in)**	**Elastic Modulus E (10^6 psi)**	**Inertia I (ft^4)**	**Seismic Shear at Bottom (lb_f)**	**Bending Moment at Bottom (lb_f-ft)**
Ellipsoidal Head #2	121.2856	27.6	*	124	38
Cylinder #1	14.6606	27.6	0.1494	1,272	8,019
Ellipsoidal Head #1 (top)	9.25	27.6	*	1,281	8,595
Support Skirt #1	0	27.6	0.09367	3,765	10,470
*Moment of Inertia I varies over the length of the component					

11.4.3: Maximum considered earthquake spectral response acceleration

The maximum considered earthquake spectral response acceleration at short period, S_{MS}
$S_{MS} = F_a * S_s = 1.2120 * 73.50 / 100 = 0.8908$
The maximum considered earthquake spectral response acceleration at 1 s period, S_{M1}
$S_{M1} = F_v * S_1 = 2.1080 * 17.30 / 100 = 0.3647$

11.4.4: Design spectral response acceleration parameters

Design earthquake spectral response acceleration at short period, S_{DS}
$S_{DS} = 2 / 3 * S_{MS} = 2 / 3 * 0.8908 = 0.5939$
Design earthquake spectral response acceleration at 1 s period, S_{D1}
$S_{D1} = 2 / 3 * S_{M1} = 2 / 3 * 0.3647 = 0.2431$

11.6 Seismic Design Category

The Risk Category is IV.
From Table 11.6-1, the Seismic Design Category based on S_{Ds} = 0.5939 is D.
From Table 11.6-2, the Seismic Design Category based on S_{D1} = 0.2431 is D.
This vessel is assigned to Seismic Design Category D.

User Defined Vertical Acceleration Term, V_{Accel}				
Factor is applied to dead load.				
Compressive Side:		= 1.0 + V_{Accel}		
Tensile Side:		= 0.6 - V_{Accel}		
V_{Accel} Term is: greater of (Force Mult * Base Shear / Weight) or (Min. Weight Mult.)				
Force multiplier = 0.4190		Minimum Weight Multiplier = 0.2000		
Condition	**Base Shear (lb_f)**	**Weight (lb)**	**Force Mult * Shear / Weight**	**V_{Accel}**
Operating, Corroded	1,285	4,807.2	0.112	0.2
Operating, New	1,285	4,810	0.112	0.2
Empty, Corroded	435	1,629.2	0.112	0.2
Empty, New	436	1,632.5	0.112	0.2
Vacuum, Corroded	1,285	4,807.2	0.112	0.2

Note: Seismic base shears used in calculation of V_{Accel} Term do not include lateral forces.

Base Shear Calculations

Operating, Corroded
Empty, Corroded
Vacuum, Corroded

Base Shear Calculations: Operating, Corroded

Paragraph 15.4.2: T < 0.06, so:
$V = 0.30 * S_{DS} * W * I_e$
= 0.30 * 0.5939 * 4,807.2476 * 1.5000
= 1,284.72 lb

12.4.2.1 Seismic Load Combinations: Horizontal Seismic Load Effect, E_h
$Q_E = V$
$E_h = 1.0 * \rho * Q_E$
= 1.0 * 1.0000 * 1,284.72
= 1,284.72 lb

Base Shear Calculations: Empty, Corroded

Paragraph 15.4.2: T < 0.06, so:
$V = 0.30 * S_{DS} * W * I_e$
= 0.30 * 0.5939 * 1,629.2180 * 1.5000
= 435.40 lb

12.4.2.1 Seismic Load Combinations: Horizontal Seismic Load Effect, E_h
$Q_E = V$
$E_h = 1.0 * \rho * Q_E$
= 1.0 * 1.0000 * 435.40
= 435.40 lb

Base Shear Calculations: Vacuum, Corroded

Paragraph 15.4.2: T < 0.06, so:
$V = 0.30 * S_{DS} * W * I_e$
= 0.30 * 0.5939 * 4,807.2476 * 1.5000
= 1,284.72 lb

12.4.2.1 Seismic Load Combinations: Horizontal Seismic Load Effect, E_h
$Q_E = V$
$E_h = 1.0 * \rho * Q_E$
= 1.0 * 1.0000 * 1,284.72
= 1,284.72 lb

Support Skirt #1

ASME Section VIII Division 1, 2017 Edition				
Component		Support Skirt		
Skirt is Attached To		Ellipsoidal Head #1		
Skirt Attachment Offset		5.4106" down from the top seam		
Material		SA-312 TP316 Wld pipe (II-D p. 74, ln. 3)		
		Impact Tested[1]	**Normalized**	**Fine Grain Practice**
		No	No	No
Design Temperature				
Internal		180°F		
External		180°F		
Dimensions				
Inner Diameter	**Top**	23.25"		
	Botttom	23.25"		
Length (includes base ring thickness)		9.25"		
Nominal Thickness		0.375"		
Corrosion	**Inner**	0"		
	Outer	0"		
Weight				
New		70.63 lb		
Corroded		70.63 lb		
Joint Efficiency				
Top		0.7		
Bottom		0.7		

[1] Impact testing requirements are not checked for supports

Skirt design thickness, largest of the following + corrosion = 0.0199 in

The governing condition is due to seismic, compressive stress at the base, operating & new.

The skirt thickness of 0.3281 in is adequate.

Results Summary							
Loading	Condition	Tensile or Compressive Side	Governing Skirt Location	Temperature (°F)	Allowable Stress (psi)	Calculated Stress/E (psi)	Required thickness (in)
Weight	operating, corroded	Tensile	top	180	14,592.08	-167.88	0.0043
		Compressive	bottom			235.07	0.006
	operating, new	Tensile	top	180	14,592.08	-167.98	0.0043
		Compressive	bottom			235.17	0.006
	empty, corroded	Tensile	top	70	15,035.07	-53.7	0.0013
		Compressive	bottom			120.89	0.003
	empty, new	Tensile	top	70	15,035.07	-53.82	0.0013
		Compressive	bottom			121.01	0.003
	vacuum, corroded	Tensile	top	180	14,592.08	-167.88	0.0043
		Compressive	bottom			235.07	0.006
Seismic	operating, corroded	Tensile	bottom	180	17,000	718.61	0.0159
		Compressive			14,592.08	775.69	0.0199
	operating, new	Tensile	bottom	180	17,000	718.93	0.0159
		Compressive			14,592.08	776.07	0.0199
	empty, corroded	Tensile	bottom	70	17,000	361.73	0.008
		Compressive			15,035.07	343.19	0.0086
	empty, new	Tensile	bottom	70	17,000	362.11	0.008
		Compressive			15,035.07	343.64	0.0086
	vacuum, corroded	Tensile	bottom	180	17,000	718.61	0.0159
		Compressive			14,592.08	775.69	0.0199

Loading due to weight, operating & corroded

Windward side (tensile)

Required thickness, tensile stress at base:

$$t = -W / (\pi*D*S_t*E) + 48*M / (\pi*D^2*S_t*E)$$
$$= -4{,}743.07 / (\pi*23.625*14{,}592*1) + 48*885.7 / (\pi*23.625^2*14{,}592*1)$$
$$= 0.0027 \text{ in}$$

Required thickness, tensile stress at the top:

$$t = -W_t / (\pi*D_t*S_t*E) + 48*M_t / (\pi*D_t^2*S_t*E)$$
$$= -4{,}672.45 / (\pi*23.625*14{,}592*1) + 48*0 / (\pi*23.625^2*14{,}592*1)$$
$$= 0.0043 \text{ in}$$

Leeward side (compressive)

Required thickness, compressive stress at base:

$$t = W / (\pi*D*S_c*E_c) + 48*M / (\pi*D^2*S_c*E_c)$$
$$= 4{,}743.07 / (\pi*23.625*14{,}592*1) + 48*885.7 / (\pi*23.625^2*14{,}592*1)$$
$$= 0.006 \text{ in}$$

Required thickness, compressive stress at the top:

$t = W_t / (\pi*D_t*S_c*E_c) + 48*M_t / (\pi*D_t^2*S_c*E_c)$
$= 4{,}672.45 / (\pi*23.625*14{,}592*1) + 48*0 / (\pi*23.625^2*14{,}592*1)$
$= 0.0043$ in

Loading due to weight, operating & new

Windward side (tensile)

Required thickness, tensile stress at base:

$t = -W / (\pi*D*S_t*E) + 48*M / (\pi*D^2*S_t*E)$
$= -4{,}745.81 / (\pi*23.625*14{,}592*1) + 48*885.7 / (\pi*23.625^2*14{,}592*1)$
$= 0.0027$ in

Required thickness, tensile stress at the top:

$t = -W_t / (\pi*D_t*S_t*E) + 48*M_t / (\pi*D_t^2*S_t*E)$
$= -4{,}675.18 / (\pi*23.625*14{,}592*1) + 48*0 / (\pi*23.625^2*14{,}592*1)$
$= 0.0043$ in

Leeward side (compressive)

Required thickness, compressive stress at base:

$t = W / (\pi*D*S_c*E_c) + 48*M / (\pi*D^2*S_c*E_c)$
$= 4{,}745.81 / (\pi*23.625*14{,}592*1) + 48*885.7 / (\pi*23.625^2*14{,}592*1)$
$= 0.006$ in

Required thickness, compressive stress at the top:

$t = W_t / (\pi*D_t*S_c*E_c) + 48*M_t / (\pi*D_t^2*S_c*E_c)$
$= 4{,}675.18 / (\pi*23.625*14{,}592*1) + 48*0 / (\pi*23.625^2*14{,}592*1)$
$= 0.0043$ in

Loading due to weight, empty & corroded

Windward side (tensile)

Required thickness, tensile stress at base:

$t = -W / (\pi*D*S_t*E) + 48*M / (\pi*D^2*S_t*E)$
$= -1{,}565.22 / (\pi*23.625*17{,}000*0.7) + 48*885.7 / (\pi*23.625^2*17{,}000*0.7)$
$= 0.0003$ in

Required thickness, tensile stress at the top:

$t = -W_t / (\pi*D_t*S_t*E) + 48*M_t / (\pi*D_t^2*S_t*E)$
$= -1{,}494.59 / (\pi*23.625*15{,}035*1) + 48*0 / (\pi*23.625^2*15{,}035*1)$
$= 0.0013$ in

Leeward side (compressive)

Required thickness, compressive stress at base:

$t = W / (\pi*D*S_c*E_c) + 48*M / (\pi*D^2*S_c*E_c)$
$= 1{,}565.22 / (\pi*23.625*15{,}035*1) + 48*885.7 / (\pi*23.625^2*15{,}035*1)$
$= 0.003$ in

Required thickness, compressive stress at the top:

$t = W_t / (\pi*D_t*S_c*E_c) + 48*M_t / (\pi*D_t^2*S_c*E_c)$
$= 1{,}494.59 / (\pi*23.625*15{,}035*1) + 48*0 / (\pi*23.625^2*15{,}035*1)$
$= 0.0013$ in

Loading due to weight, empty & new

Windward side (tensile)

Required thickness, tensile stress at base:

$t = -W / (\pi*D*S_t*E) + 48*M / (\pi*D^2*S_t*E)$
$= -1{,}568.45 / (\pi*23.625*17{,}000*0.7) + 48*885.7 / (\pi*23.625^2*17{,}000*0.7)$
$= 0.0003$ in

Required thickness, tensile stress at the top:

$t = -W_t / (\pi*D_t*S_t*E) + 48*M_t / (\pi*D_t^2*S_t*E)$
$= -1{,}497.83 / (\pi*23.625*15{,}035*1) + 48*0 / (\pi*23.625^2*15{,}035*1)$
$= 0.0013$ in

Leeward side (compressive)

Required thickness, compressive stress at base:

$t = W / (\pi*D*S_c*E_c) + 48*M / (\pi*D^2*S_c*E_c)$
$= 1{,}568.45 / (\pi*23.625*15{,}035*1) + 48*885.7 / (\pi*23.625^2*15{,}035*1)$
$= 0.003$ in

Required thickness, compressive stress at the top:

$t = W_t / (\pi*D_t*S_c*E_c) + 48*M_t / (\pi*D_t^2*S_c*E_c)$
$= 1{,}497.83 / (\pi*23.625*15{,}035*1) + 48*0 / (\pi*23.625^2*15{,}035*1)$
$= 0.0013$ in

Loading due to weight, vacuum & corroded

Windward side (tensile)

Required thickness, tensile stress at base:

$t = -W / (\pi*D*S_t*E) + 48*M / (\pi*D^2*S_t*E)$
$= -4,743.07 / (\pi*23.625*14,592*1) + 48*885.7 / (\pi*23.625^2*14,592*1)$
$= 0.0027$ in

Required thickness, tensile stress at the top:

$t = -W_t / (\pi*D_t*S_t*E) + 48*M_t / (\pi*D_t^2*S_t*E)$
$= -4,672.45 / (\pi*23.625*14,592*1) + 48*0 / (\pi*23.625^2*14,592*1)$
$= 0.0043$ in

Leeward side (compressive)

Required thickness, compressive stress at base:

$t = W / (\pi*D*S_c*E_c) + 48*M / (\pi*D^2*S_c*E_c)$
$= 4,743.07 / (\pi*23.625*14,592*1) + 48*885.7 / (\pi*23.625^2*14,592*1)$
$= 0.006$ in

Required thickness, compressive stress at the top:

$t = W_t / (\pi*D_t*S_c*E_c) + 48*M_t / (\pi*D_t^2*S_c*E_c)$
$= 4,672.45 / (\pi*23.625*14,592*1) + 48*0 / (\pi*23.625^2*14,592*1)$
$= 0.0043$ in

Loading due to seismic, operating & corroded

Tensile side

Required thickness, tensile stress at base:

$t = -(0.6 - VAccel)*W / (\pi*D*S_t*E) + 48*M / (\pi*D^2*S_t*E)$
$= -(0.6 - 0.2)*4,743.07 / (\pi*23.625*17,000*0.7) + 48*7,594.7 / (\pi*23.625^2*17,000*0.7)$
$= 0.0159$ in

Required thickness, tensile stress at the top:

$t = -(0.6 - VAccel)*W_t / (\pi*D_t*S_t*E) + 48*M_t / (\pi*D_t^2*S_t*E)$
$= -(0.6 - 0.2)*4,672.45 / (\pi*23.625*17,000*0.7) + 48*6,016.1 / (\pi*23.625^2*17,000*0.7)$
$= 0.0117$ in

Compressive side

Required thickness, compressive stress at base:

$t = (1 + VAccel)*W / (\pi*D*S_c*E_c) + 48*M / (\pi*D^2*S_c*E_c)$
$= (1 + 0.2)*4,743.07 / (\pi*23.625*14,592*1) + 48*7,594.7 / (\pi*23.625^2*14,592*1)$
$= 0.0199$ in

Required thickness, compressive stress at the top:

$t = (1 + VAccel)*W_t / (\pi*D_t*S_c*E_c) + 48*M_t / (\pi*D_t^2*S_c*E_c)$
$= (1 + 0.2)*4,672.45 / (\pi*23.625*14,592*1) + 48*6,016.1 / (\pi*23.625^2*14,592*1)$
$= 0.0165$ in

Loading due to seismic, operating & new

Tensile side

Required thickness, tensile stress at base:

$t = -(0.6 - VAccel)*W / (\pi*D*S_t*E) + 48*M / (\pi*D^2*S_t*E)$
$= -(0.6 - 0.2)*4,745.81 / (\pi*23.625*17,000*0.7) + 48*7,598.4 / (\pi*23.625^2*17,000*0.7)$
$= 0.0159$ in

Required thickness, tensile stress at the top:

$t = -(0.6 - VAccel)*W_t / (\pi*D_t*S_t*E) + 48*M_t / (\pi*D_t^2*S_t*E)$
$= -(0.6 - 0.2)*4,675.18 / (\pi*23.625*17,000*0.7) + 48*6,019.5 / (\pi*23.625^2*17,000*0.7)$
$= 0.0117$ in

Compressive side

Required thickness, compressive stress at base:

$t = (1 + VAccel)*W / (\pi*D*S_c*E_c) + 48*M / (\pi*D^2*S_c*E_c)$
$= (1 + 0.2)*4,745.81 / (\pi*23.625*14,592*1) + 48*7,598.4 / (\pi*23.625^2*14,592*1)$
$= 0.0199$ in

Required thickness, compressive stress at the top:

$t = (1 + VAccel)*W_t / (\pi*D_t*S_c*E_c) + 48*M_t / (\pi*D_t^2*S_c*E_c)$
$= (1 + 0.2)*4,675.18 / (\pi*23.625*14,592*1) + 48*6,019.5 / (\pi*23.625^2*14,592*1)$
$= 0.0165$ in

Loading due to seismic, empty & corroded

Tensile side

Required thickness, tensile stress at base:

$t = -(0.6 - VAccel)*W / (\pi*D*S_t*E) + 48*M / (\pi*D^2*S_t*E)$

$= -(0.6 - 0.2)*1,565.22 / (\pi*23.625*17,000*0.7) + 48*3,356.6 / (\pi*23.625^2*17,000*0.7)$

$= 0.008$ in

Required thickness, tensile stress at the top:

$t = -(0.6 - VAccel)*W_t / (\pi*D_t*S_t*E) + 48*M_t / (\pi*D_t^2*S_t*E)$

$= -(0.6 - 0.2)*1,494.59 / (\pi*23.625*17,000*0.7) + 48*2,236.3 / (\pi*23.625^2*17,000*0.7)$

$= 0.0045$ in

Compressive side

Required thickness, compressive stress at base:

$t = (1 + VAccel)*W / (\pi*D*S_c*E_c) + 48*M / (\pi*D^2*S_c*E_c)$

$= (1 + 0.2)*1,565.22 / (\pi*23.625*15,035*1) + 48*3,356.6 / (\pi*23.625^2*15,035*1)$

$= 0.0086$ in

Required thickness, compressive stress at the top:

$t = (1 + VAccel)*W_t / (\pi*D_t*S_c*E_c) + 48*M_t / (\pi*D_t^2*S_c*E_c)$

$= (1 + 0.2)*1,494.59 / (\pi*23.625*15,035*1) + 48*2,236.3 / (\pi*23.625^2*15,035*1)$

$= 0.0057$ in

Loading due to seismic, empty & new

Tensile side

Required thickness, tensile stress at base:

$t = -(0.6 - VAccel)*W / (\pi*D*S_t*E) + 48*M / (\pi*D^2*S_t*E)$

$= -(0.6 - 0.2)*1,568.45 / (\pi*23.625*17,000*0.7) + 48*3,361.1 / (\pi*23.625^2*17,000*0.7)$

$= 0.008$ in

Required thickness, tensile stress at the top:

$t = -(0.6 - VAccel)*W_t / (\pi*D_t*S_t*E) + 48*M_t / (\pi*D_t^2*S_t*E)$

$= -(0.6 - 0.2)*1,497.83 / (\pi*23.625*17,000*0.7) + 48*2,240.3 / (\pi*23.625^2*17,000*0.7)$

$= 0.0045$ in

Compressive side

Required thickness, compressive stress at base:

$t = (1 + VAccel)*W / (\pi*D*S_c*E_c) + 48*M / (\pi*D^2*S_c*E_c)$
$= (1 + 0.2)*1,568.45 / (\pi*23.625*15,035*1) + 48*3,361.1 / (\pi*23.625^2*15,035*1)$
$= 0.0086$ in

Required thickness, compressive stress at the top:

$t = (1 + VAccel)*W_t / (\pi*D_t*S_c*E_c) + 48*M_t / (\pi*D_t^2*S_c*E_c)$
$= (1 + 0.2)*1,497.83 / (\pi*23.625*15,035*1) + 48*2,240.3 / (\pi*23.625^2*15,035*1)$
$= 0.0057$ in

Loading due to seismic, vacuum & corroded

Tensile side

Required thickness, tensile stress at base:

$t = -(0.6 - VAccel)*W / (\pi*D*S_t*E) + 48*M / (\pi*D^2*S_t*E)$
$= -(0.6 - 0.2)*4,743.07 / (\pi*23.625*17,000*0.7) + 48*7,594.7 / (\pi*23.625^2*17,000*0.7)$
$= 0.0159$ in

Required thickness, tensile stress at the top:

$t = -(0.6 - VAccel)*W_t / (\pi*D_t*S_t*E) + 48*M_t / (\pi*D_t^2*S_t*E)$
$= -(0.6 - 0.2)*4,672.45 / (\pi*23.625*17,000*0.7) + 48*6,016.1 / (\pi*23.625^2*17,000*0.7)$
$= 0.0117$ in

Compressive side

Required thickness, compressive stress at base:

$t = (1 + VAccel)*W / (\pi*D*S_c*E_c) + 48*M / (\pi*D^2*S_c*E_c)$
$= (1 + 0.2)*4,743.07 / (\pi*23.625*14,592*1) + 48*7,594.7 / (\pi*23.625^2*14,592*1)$
$= 0.0199$ in

Required thickness, compressive stress at the top:

$t = (1 + VAccel)*W_t / (\pi*D_t*S_c*E_c) + 48*M_t / (\pi*D_t^2*S_c*E_c)$
$= (1 + 0.2)*4,672.45 / (\pi*23.625*14,592*1) + 48*6,016.1 / (\pi*23.625^2*14,592*1)$
$= 0.0165$ in

Skirt Buckling Check per ASCE 15.7.10.5

4.4.12.2.b Allowable Axial Compressive Membrane Stress		
$M_x = L / (R_o*t)^{0.5}$		(4.4.124)
cbar = 2.64	for $M_x \le 1.5$	(4.4.69)
cbar = $3.13 / M_x^{0.42}$	for $1.5 < M_x < 15$	(4.4.70)
cbar = 1	for $M_x \ge 15$	(4.4.71)
$C_x = \min[409*cbar / (389 + D_o / t) , 0.9]$	for $D_o / t < 1247$	(4.4.67)
$C_x = 0.25*cbar$	for $1247 \le D_o / t \le 2000$	(4.4.68)
$F_{xe} = C_x*E_y*t / D_o$		(4.4.66)
$F_{xa} = \min[F_{xe} / FS*(E_t / E_y) , S_y / FS]$		(4.4.4)
$\lambda_c = K_u*L_u / (\pi*r_g)*(F_{xa}*FS / E_y)^{0.5}$		(4.4.125)
New / Corroded		
$D_o / t = 24 / 0.3281 =$		73.1429
$M_x = 9.25 / (12*0.3281)^{0.5} =$		4.6616
cbar = $3.13 / M_x^{0.42} =$		1.6397
$C_x = \min[409*1.6397 / (389 + 24 / 0.3281) , 0.9] =$		0.9
Operating Hot & Corroded		
$F_{xe} = 0.9*27.62E+06*0.3281 / 24 =$		339,893 psi
$F_{xa} = \min[339,893 / 1.667*(22.46E+05 / 27.62E+06) , 26,500 / 1.667] =$		15,897 psi
$\lambda_c = 2.1*129.9419 / (\pi*8.3369)*(15,897*1.667 / 27.62E+06)^{0.5} =$		0.3227
Operating Hot & New		
$F_{xe} = 0.9*27.62E+06*0.3281 / 24 =$		339,893 psi
$F_{xa} = \min[339,893 / 1.667*(22.46E+05 / 27.62E+06) , 26,500 / 1.667] =$		15,897 psi
$\lambda_c = 2.1*129.9419 / (\pi*8.3369)*(15,897*1.667 / 27.62E+06)^{0.5} =$		0.3227
Empty Cold & Corroded		
$F_{xe} = 0.9*28.3E+06*0.3281 / 24 =$		348,223 psi
$F_{xa} = \min[348,223 / 1.7067*(23.04E+05 / 28.3E+06) , 30,000 / 1.7067] =$		16,614 psi
$\lambda_c = 2.1*129.9419 / (\pi*8.3369)*(16,614*1.7067 / 28.3E+06)^{0.5} =$		0.3298
Empty Cold & New		
$F_{xe} = 0.9*28.3E+06*0.3281 / 24 =$		348,223 psi
$F_{xa} = \min[348,223 / 1.7067*(23.04E+05 / 28.3E+06) , 30,000 / 1.7067] =$		16,614 psi
$\lambda_c = 2.1*129.9419 / (\pi*8.3369)*(16,614*1.7067 / 28.3E+06)^{0.5} =$		0.3298

External Pressure Hot & Corroded	
F_{xe} = 0.9*27.62E+06*0.3281 / 24 =	339,893 psi
F_{xa} = min[339,893 / 1.667*(22.46E+05 / 27.62E+06) , 26,500 / 1.667] =	15,897 psi
λ_c = 2.1*129.9419 / (π*8.3369)*(15,897*1.667 / 27.62E+06)$^{0.5}$ =	0.3227

4.4.12.2.c Compressive Bending Stress	
F_{ba} = F_{xa}	(4.4.5)
Operating Hot & Corroded	
F_{ba} = F_{xa} =	15,897 psi
Operating Hot & New	
F_{ba} = F_{xa} =	15,897 psi
Empty Cold & Corroded	
F_{ba} = F_{xa} =	16,614 psi
Empty Cold & New	
F_{ba} = F_{xa} =	16,614 psi
External Pressure Hot & Corroded	
F_{ba} = F_{xa} =	15,897 psi

4.4.12.2.d Allowable Shear Stress		
$C_v = 4.454$	for $M_x \leq 1.5$	(4.4.81)
$C_v = (9.64 / M_x^2)*(1 + 0.0239*M_x^3)^{0.5}$	for $1.5 < M_x < 26$	(4.4.82)
$C_v = 1.492 / M_x^{0.5}$	for $26 \leq M_x < 4.347*(D_o / t)$	(4.4.83)
$C_v = 0.716*(t / D_o)^{0.5}$	for $M_x \geq 4.347*(D_o / t)$	(4.4.84)
$\alpha_v = 0.8$	for $D_o / t \leq 500$	(4.4.85)
$\alpha_v = 1.389 - 0.218*\log_{10}(D_o / t)$	for $D_o / t > 500$	(4.4.86)
$F_{ve} = \alpha_v*C_v*E_y*(t / D_o)$		(4.4.80)
$F_{va} = \min[F_{ve} / FS*(E_t / E_y) , S_y / FS]$		(4.4.7)
Operating Hot & Corroded		
$D_o / t = 24 / 0.3281 =$		73.1429
$M_x = 9.25 / (12*0.3281)^{0.5} =$		4.6616
$C_v = (9.64 / 4.6616^2)*(1 + 0.0239*4.6616^3)^{0.5} =$		0.8205
$\alpha_v = 0.8 =$		0.8
$F_{ve} = 0.8*0.8205*27.62E+06*(0.3281 / 24) =$		247,902 psi
$F_{va} = \min[247,902 / 1.667*(30.14E+05 / 27.62E+06) , 26,500 / 1.667] =$		15,897 psi
Operating Hot & New		
$D_o / t = 24 / 0.3281 =$		73.1429
$M_x = 9.25 / (12*0.3281)^{0.5} =$		4.6616
$C_v = (9.64 / 4.6616^2)*(1 + 0.0239*4.6616^3)^{0.5} =$		0.8205
$\alpha_v = 0.8 =$		0.8
$F_{ve} = 0.8*0.8205*27.62E+06*(0.3281 / 24) =$		247,902 psi
$F_{va} = \min[247,902 / 1.667*(30.14E+05 / 27.62E+06) , 26,500 / 1.667] =$		15,897 psi
Empty Cold & Corroded		
$D_o / t = 24 / 0.3281 =$		73.1429
$M_x = 9.25 / (12*0.3281)^{0.5} =$		4.6616
$C_v = (9.64 / 4.6616^2)*(1 + 0.0239*4.6616^3)^{0.5} =$		0.8205
$\alpha_v = 0.8 =$		0.8
$F_{ve} = 0.8*0.8205*28.3E+06*(0.3281 / 24) =$		253,977 psi
$F_{va} = \min[253,977 / 1.7215*(30.93E+05 / 28.3E+06) , 30,000 / 1.7215] =$		16,123 psi
Empty Cold & New		
$D_o / t = 24 / 0.3281 =$		73.1429
$M_x = 9.25 / (12*0.3281)^{0.5} =$		4.6616

$C_v = (9.64 / 4.6616^2)*(1 + 0.0239*4.6616^3)^{0.5} =$	0.8205
$\alpha_v = 0.8 =$	0.8
$F_{ve} = 0.8*0.8205*28.3E+06*(0.3281 / 24) =$	253,977 psi
$F_{va} = \min[253,977 / 1.7215*(30.93E+05 / 28.3E+06) , 30,000 / 1.7215] =$	16,123 psi
External Pressure Hot & Corroded	
$D_o / t = 24 / 0.3281 =$	73.1429
$M_x = 9.25 / (12*0.3281)^{0.5} =$	4.6616
$C_v = (9.64 / 4.6616^2)*(1 + 0.0239*4.6616^3)^{0.5} =$	0.8205
$\alpha_v = 0.8 =$	0.8
$F_{ve} = 0.8*0.8205*27.62E+06*(0.3281 / 24) =$	247,902 psi
$F_{va} = \min[247,902 / 1.667*(30.14E+05 / 27.62E+06) , 26,500 / 1.667] =$	15,897 psi

4.4.12.2.i Axial Compression, Bending Moment, and Shear		
$f_b = M / S$		(4.4.119)
$f_a = F / A$		(4.4.120)
$f_v = V*\sin[\phi] / A$		(4.4.122)
$K_s = 1 - (f_v / F_{va})^2$		(4.4.105)
$F_e = \pi^2*E_y / (K_u*L_u / r_g)^2$		(4.4.110)
$\Delta = C_m / (1 - f_a*FS / F_e)$		(4.4.109)
$F_{ca} = F_{xa}*[1 - 0.74*(\lambda_c - 0.15)]^{0.3}$	for $0.15 < \lambda_c < 1.2$	(4.4.72)
$f_a / (K_s*F_{ca}) + 8*\Delta*f_b / (9*K_s*F_{ba}) \leq 1$	for $f_a / (K_s*F_{ca}) \geq 0.2$	(4.4.112)
$f_a / (2*K_s*F_{ca}) + \Delta*f_b / (K_s*F_{ba}) \leq 1$	for $f_a / (K_s*F_{ca}) < 0.2$	(4.4.113)
New / Corroded		
$r_g = 0.25*(23.9063^2 + 23.25^2)^{0.5} =$		8.3369"
$A = \pi*(23.9063^2 - 23.25^2) / 4 =$		24.31 in^2
$S = \pi*(23.9063^4 - 23.25^4) / (32*23.9063) =$		141.3285 in^3
Operating Hot & Corroded		
Seismic ASCE 15.7.10.5	$f_b = 125,639.5 / 141.3285 =$	889 psi
	$f_a = 4,743.07 / 24.31 =$	195 psi
	$f_v = 3,764.67*\sin[90] / 24.31 =$	155 psi
	$K_s = 1 - (155 / 15,897)^2 =$	0.9999
	$F_e = \pi^2*27.62E+06 / (2.1*129.9419 / 8.3369)^2 =$	254,476 psi
	$\Delta = 1 / (1 - 195*1.667 / 254,476) =$	1.0013

	F_{ca} = 15,897*[1 - 0.74*(0.3227 - 0.15)]$^{0.3}$ =	15,258 psi
	f_a / (K_s*F_{ca}) = 195 / (0.9999*15,258) =	0.0128
	195 / (2*0.9999*15,258) + 1.0013*889 / (0.9999*15,897) =	0.0624
	Combined load check passes.	
Operating Hot & New		
Seismic ASCE 15.7.10.5	f_b = 125,703.9 / 141.3285 =	889 psi
	f_a = 4,745.81 / 24.31 =	195 psi
	f_v = 3,765.4*sin[90] / 24.31 =	155 psi
	K_s = 1 - (155 / 15,897)^2 =	0.9999
	F_e = π^2*27.62E+06 / (2.1*129.9419 / 8.3369)^2 =	254,476 psi
	Δ = 1 / (1 - 195*1.667 / 254,476) =	1.0013
	F_{ca} = 15,897*[1 - 0.74*(0.3227 - 0.15)]$^{0.3}$ =	15,258 psi
	f_a / (K_s*F_{ca}) = 195 / (0.9999*15,258) =	0.0128
	195 / (2*0.9999*15,258) + 1.0013*889 / (0.9999*15,897) =	0.0624
	Combined load check passes.	
Empty Cold & Corroded		
Seismic ASCE 15.7.10.5	f_b = 52,986.9 / 141.3285 =	375 psi
	f_a = 1,565.22 / 24.31 =	64 psi
	f_v = 2,915.4*sin[90] / 24.31 =	120 psi
	K_s = 1 - (120 / 16,123)^2 =	0.9999
	F_e = π^2*28.3E+06 / (2.1*129.9419 / 8.3369)^2 =	260,713 psi
	Δ = 1 / (1 - 64*1.7067 / 260,713) =	1.0004
	F_{ca} = 16,614*[1 - 0.74*(0.3298 - 0.15)]$^{0.3}$ =	15,917 psi
	f_a / (K_s*F_{ca}) = 64 / (0.9999*15,917) =	0.004
	64 / (2*0.9999*15,917) + 1.0004*375 / (0.9999*16,614) =	0.0246
	Combined load check passes.	
Empty Cold & New		
Seismic ASCE 15.7.10.5	f_b = 53,063.6 / 141.3285 =	375 psi
	f_a = 1,568.45 / 24.31 =	65 psi
	f_v = 2,916.27*sin[90] / 24.31 =	120 psi
	K_s = 1 - (120 / 16,123)^2 =	0.9999
	F_e = π^2*28.3E+06 / (2.1*129.9419 / 8.3369)^2 =	260,713 psi
	Δ = 1 / (1 - 65*1.7067 / 260,713) =	1.0004
	F_{ca} = 16,614*[1 - 0.74*(0.3298 - 0.15)]$^{0.3}$ =	15,917 psi
	f_a / (K_s*F_{ca}) = 65 / (0.9999*15,917) =	0.0041

	65 / (2*0.9999*15,917) + 1.0004*375 / (0.9999*16,614) =	0.0246
	Combined load check passes.	
External Pressure Hot & Corroded		
Seismic ASCE 15.7.10.5	f_b = 125,639.5 / 141.3285 =	889 psi
	f_a = 4,743.07 / 24.31 =	195 psi
	f_v = 3,764.67*sin[90] / 24.31 =	155 psi
	$K_s = 1 - (155 / 15,897)^2$ =	0.9999
	$F_e = \pi^2$*27.62E+06 / $(2.1*129.9419 / 8.3369)^2$ =	254,476 psi
	Δ = 1 / (1 - 195*1.667 / 254,476) =	1.0013
	$F_{ca} = 15,897*[1 - 0.74*(0.3227 - 0.15)]^{0.3}$ =	15,258 psi
	$f_a / (K_s*F_{ca})$ = 195 / (0.9999*15,258) =	0.0128
	195 / (2*0.9999*15,258) + 1.0013*889 / (0.9999*15,897) =	0.0624
	Combined load check passes.	

Skirt Base Ring #1

Inputs	
Base configuration	single base plate without gussets
Base plate material	316 S.S.
Base plate allowable stress, S_p	20,000 psi
Foundation compressive strength	1,658 psi
Concrete ultimate 28-day strength	3,000 psi
Bolt circle, BC	28.125"
Base plate inner diameter, D_i	18.375"
Base plate outer diameter, D_o	30.375"
Base plate thickness, t_b	0.5"
Anchor Bolts	
Material	
Allowable stress, S_b	20,000 psi
Bolt size and type	0.5" coarse threaded
Number of bolts, N	8
Corrosion allowance (applied to root radius)	0"
Anchor bolt clearance	0.375"
Bolt root area (corroded), A_b	0.13 in^2
Diameter of anchor bolt holes, d_b	0.875"
Initial bolt preload	0% (0 psi)
Bolt at 0°	No

Results Summary							
Load	Vessel condition	Base V (lb_f)	Base M (lb_f-ft)	W (lb)	Required bolt area (in^2)	t_r Base (in)	Foundation bearing stress (psi)
Weight	operating, corroded	2,480	885.7	4,807.1	0	0.1514	15.03
Weight	operating, new	2,480	885.7	4,809.8	0	0.1514	15.04
Weight	empty, corroded	2,480	885.7	1,629.2	0	0.1107	8.04
Weight	empty, new	2,480	885.7	1,632.5	0	0.1108	8.05
Weight	vacuum, corroded	2,480	885.7	4,807.1	0	0.1514	15.03
Seismic	operating, corroded	3,379.3	7,594.7	4,807.1	0.0718	0.4626	140.4
Seismic	operating, new	3,379.8	7,598.4	4,809.8	0.0719	0.4627	140.46
Seismic	empty, corroded	2,784.8	3,356.6	1,629.2	0.037	0.3331	72.8
Seismic	empty, new	2,785.4	3,361.1	1,632.5	0.037	0.3332	72.87
Seismic	vacuum, corroded	3,379.3	7,594.7	4,807.1	0.0718	0.4626	140.4

Anchor bolt load (operating, corroded + Weight)

$P = -W / N + 48 * M / (N*BC)$
$= -4{,}807.07 / 8 + 48 * 885.7 / (8*28.125)$
$= -411.94\ lb_f$

The anchor bolts are satisfactory (no net uplift on anchor bolt)

Foundation bearing stress (operating, corroded + Weight)

$A_c = \pi*(D_o^2 - D_i^2) / 4 - N*\pi*d_b^2 / 4$
$= \pi*(30.375^2 - 18.375^2) / 4 - 8*\pi*0.875^2 / 4$
$= 454.6474\ in^2$

$I_c = \pi*(D_o^4 - D_i^4) / 64$
$= \pi*(30.375^4 - 18.375^4) / 64$
$= 36{,}190.39\ in^4$

$f_c = N*A_b*Preload / A_c + W / A_c + 6*M*D_o / I_c$
$= 8*0.126*0 / 454.6474 + 4{,}807.07 / 454.6474 + 6*885.7*30.375 / 36{,}190.39$
$= 15$ psi

As f_c <= 1,658 psi the base plate width is satisfactory.

Base plate required thickness (operating, corroded + Weight)

$t_r = (3*f_c*L^2 / S_p)^{0.5}$
$= (3*15*3.1875^2 / 20{,}000)^{0.5}$
$= 0.1514$ in

The base plate thickness is satisfactory.

Anchor bolt load (operating, new + Weight)

$P = -W / N + 48 * M / (N*BC)$

$= -4{,}809.81 / 8 + 48 * 885.7 / (8*28.125)$
$= -412.28\ lb_f$

The anchor bolts are satisfactory (no net uplift on anchor bolt)

Foundation bearing stress (operating, new + Weight)

$A_c = \pi*(D_o^2 - D_i^2) / 4 - N*\pi*d_b^2 / 4$
$= \pi*(30.375^2 - 18.375^2) / 4 - 8*\pi*0.875^2 / 4$
$= 454.6474\ in^2$

$I_c = \pi*(D_o^4 - D_i^4) / 64$
$= \pi*(30.375^4 - 18.375^4) / 64$
$= 36{,}190.39\ in^4$

$f_c = N*A_b*Preload / A_c + W / A_c + 6*M*D_o / I_c$
$= 8*0.126*0 / 454.6474 + 4{,}809.81 / 454.6474 + 6*885.7*30.375 / 36{,}190.39$
$= 15$ psi

As f_c <= 1,658 psi the base plate width is satisfactory.

Base plate required thickness (operating, new + Weight)

$t_r = (3*f_c*L^2 / S_p)^{0.5}$
$= (3*15*3.1875^2 / 20{,}000)^{0.5}$
$= 0.1514$ in

The base plate thickness is satisfactory.

Anchor bolt load (empty, corroded + Weight)

$P = -W / N + 48 * M / (N*BC)$
$= -1{,}629.22 / 8 + 48 * 885.7 / (8*28.125)$
$= -14.7\ lb_f$

The anchor bolts are satisfactory (no net uplift on anchor bolt)

Foundation bearing stress (empty, corroded + Weight)

$A_c = \pi*(D_o^2 - D_i^2) / 4 - N*\pi*d_b^2 / 4$
$= \pi*(30.375^2 - 18.375^2) / 4 - 8*\pi*0.875^2 / 4$
$= 454.6474\ in^2$

$I_c = \pi*(D_o^4 - D_i^4) / 64$
$= \pi*(30.375^4 - 18.375^4) / 64$
$= 36{,}190.39\ in^4$

$f_c = N*A_b*Preload / A_c + W / A_c + 6*M*D_o / I_c$
$= 8*0.126*0 / 454.6474 + 1{,}629.22 / 454.6474 + 6*885.7*30.375 / 36{,}190.39$
$= 8$ psi

As f_c <= 1,658 psi the base plate width is satisfactory.

Base plate required thickness (empty, corroded + Weight)

$t_r = (3*f_c*L^2 / S_p)^{0.5}$
$= (3*8*3.1875^2 / 20{,}000)^{0.5}$

= 0.1107 in

The base plate thickness is satisfactory.

Anchor bolt load (empty, new + Weight)

$P = -W / N + 48 * M / (N*BC)$
$= -1,632.45 / 8 + 48 * 885.7 / (8*28.125)$
$= -15.11\ lb_f$

The anchor bolts are satisfactory (no net uplift on anchor bolt)

Foundation bearing stress (empty, new + Weight)

$A_c = \pi*(D_o^2 - D_i^2) / 4 - N*\pi*d_b^2 / 4$
$= \pi*(30.375^2 - 18.375^2) / 4 - 8*\pi*0.875^2 / 4$
$= 454.6474\ in^2$

$I_c = \pi*(D_o^4 - D_i^4) / 64$
$= \pi*(30.375^4 - 18.375^4) / 64$
$= 36,190.39\ in^4$

$f_c = N*A_b*Preload / A_c + W / A_c + 6*M*D_o / I_c$
$= 8*0.126*0 / 454.6474 + 1,632.45 / 454.6474 + 6*885.7*30.375 / 36,190.39$
= 8 psi

As f_c <= 1,658 psi the base plate width is satisfactory.

Base plate required thickness (empty, new + Weight)

$t_r = (3*f_c*L^2 / S_p)^{0.5}$
$= (3*8*3.1875^2 / 20,000)^{0.5}$
= 0.1108 in

The base plate thickness is satisfactory.

Anchor bolt load (vacuum, corroded + Weight)

$P = -W / N + 48 * M / (N*BC)$
$= -4,807.07 / 8 + 48 * 885.7 / (8*28.125)$
$= -411.94\ lb_f$

The anchor bolts are satisfactory (no net uplift on anchor bolt)

Foundation bearing stress (vacuum, corroded + Weight)

$A_c = \pi*(D_o^2 - D_i^2) / 4 - N*\pi*d_b^2 / 4$
$= \pi*(30.375^2 - 18.375^2) / 4 - 8*\pi*0.875^2 / 4$
$= 454.6474\ in^2$

$I_c = \pi*(D_o^4 - D_i^4) / 64$
$= \pi*(30.375^4 - 18.375^4) / 64$
$= 36,190.39\ in^4$

$f_c = N*A_b*Preload / A_c + W / A_c + 6*M*D_o / I_c$
$= 8*0.126*0 / 454.6474 + 4,807.07 / 454.6474 + 6*885.7*30.375 / 36,190.39$
= 15 psi

As f_c <= 1,658 psi the base plate width is satisfactory.

Base plate required thickness (vacuum, corroded + Weight)

$t_r = (3*f_c*L^2 / S_p)^{0.5}$
$= (3*15*3.1875^2 / 20{,}000)^{0.5}$
= 0.1514 in

The base plate thickness is satisfactory.

Anchor bolt load (operating, corroded + Seismic)

P = -(0.6 - VAccel)*W / N + 48 * M / (N*BC)
= -(0.6 - 0.2)*4,807.07 / 8 + 48 * 7,594.7 / (8*28.125)
= 1,436.66 lb_f

Required area per bolt = P / S_b = 0.0718 in^2

The area provided (0.126 in^2) by the specified anchor bolt is adequate.

Support calculations (Jawad & Farr chapter 12, operating, corroded + Seismic)

Base plate width, t_c:	6	in
Average base plate diameter, d:	24.375	in
Base plate elastic modulus, E_s:	29.0E+06	psi
Base plate yield stress, S_y:	36,000	psi

E_c = 57,000*Sqr(3,000) = 3,122,019 psi

n = E_s/E_c = 29.0E+06 / 3,122,019 = 9.2889

$t_s = (N*A_b) / (\pi*d)$
$= (8*0.126) / (\pi*24.375)$
= 0.0132 in

From table 12.4 for k = 0.129736:

K_1 = 2.8183, K_2 = 0.9737
L_1 = 9.024, L_2 = 16.2351, L_3 = 2.5209

Total tensile force on bolting

$T = (12*M - (0.6 - VAccel)*W *(L_1 + L_3)) / (L_2 + L_3)$
= (12*7,594.7 - (0.6 - 0.2)*4,807.07 *(9.024 + 2.5209)) / (16.2351 + 2.5209)
= 3,955.25 lb_f

Tensile stress in bolts use the larger of f_s or bolt preload = 0 psi

$f_s = T / (t_s * (d / 2) * K_1)$
= 3,955.25 / (0.0132 * (24.375 / 2) * 2.8183)
= 8,748 psi

Total compressive load on foundation

C_c = T + (1 + VAccel)*W + Bolt Preload
= 3,955.25 + (1 + 0.2)*4,807.07 + 0

= 10,178.24 lb_f

Foundation bearing stress

$f_c = C_c / (((t_c - t_s) + n*t_s)*(d / 2)*K_2)$
= 10,178.24 / (((6 - 0.0132) + 9.2889*0.0132)*(24.375 / 2)*0.9737)
= 140 psi

As f_c <= 1,658 psi the base plate width is satisfactory.

$k = 1 / (1 + f_s / (n*f_c))$
= 1 / (1 + 8,748 / (9.2889*140))
= 0.129736

Base plate required thickness (operating, corroded + Seismic)

$t_r = (3*f_c*L^2 / S_p)^{0.5}$
= $(3*140*3.1875^2 / 20,000)^{0.5}$
= 0.4626 in

The base plate thickness is satisfactory.

Anchor bolt load (operating, new + Seismic)

P = -(0.6 - VAccel)*W / N + 48 * M / (N*BC)
= -(0.6 - 0.2)*4,809.81 / 8 + 48 * 7,598.4 / (8*28.125)
= 1,437.28 lb_f

Required area per bolt = P / S_b = 0.0719 in^2

The area provided (0.126 in^2) by the specified anchor bolt is adequate.

Support calculations (Jawad & Farr chapter 12, operating, new + Seismic)

Base plate width, t_c:	6	in
Average base plate diameter, d:	24.375	in
Base plate elastic modulus, E_s:	29.0E+06	psi
Base plate yield stress, S_y:	36,000	psi

E_c = 57,000*Sqr(3,000) = 3,122,019 psi

n = E_s/E_c = 29.0E+06 / 3,122,019 = 9.2889

$t_s = (N*A_b) / (\pi*d)$
= (8*0.126) / (π*24.375)
= 0.0132 in

From table 12.4 for k = 0.12974:

K_1 = 2.8183, K_2 = 0.9737
L_1 = 9.0239, L_2 = 16.235, L_3 = 2.5209

Total tensile force on bolting

$T = (12*M - (0.6 - VAccel)*W *(L_1 + L_3)) / (L_2 + L_3)$
= (12*7,598.4 - (0.6 - 0.2)*4,809.81 *(9.0239 + 2.5209)) / (16.235 + 2.5209)
= 3,956.78 lb_f

Tensile stress in bolts use the larger of f_s or bolt preload = 0 psi

$f_s = T / (t_s * (d / 2) * K_1)$
= 3,956.78 / (0.0132 * (24.375 / 2) * 2.8183)
= 8,751 psi

Total compressive load on foundation

$C_c = T + (1 + VAccel)*W + Bolt\ Preload$
= 3,956.78 + (1 + 0.2)*4,809.81 + 0
= 10,182.71 lb_f

Foundation bearing stress

$f_c = C_c / (((t_c - t_s) + n*t_s)*(d / 2)*K_2)$
= 10,182.71 / (((6 - 0.0132) + 9.2889*0.0132)*(24.375 / 2)*0.9737)
= 140 psi

As f_c <= 1,658 psi the base plate width is satisfactory.

$k = 1 / (1 + f_s / (n*f_c))$
= 1 / (1 + 8,751 / (9.2889*140))
= 0.12974

Base plate required thickness (operating, new + Seismic)

$t_r = (3*f_c*L^2 / S_p)^{0.5}$
= $(3*140*3.1875^2 / 20{,}000)^{0.5}$
= 0.4627 in

The base plate thickness is satisfactory.

Anchor bolt load (empty, corroded + Seismic)

P = -(0.6 - VAccel)*W / N + 48 * M / (N*BC)
= -(0.6 - 0.2)*1,629.22 / 8 + 48 * 3,356.6 / (8*28.125)
= 739.74 lb_f

Required area per bolt = P / S_b = 0.037 in^2

The area provided (0.126 in^2) by the specified anchor bolt is adequate.

Support calculations (Jawad & Farr chapter 12, empty, corroded + Seismic)

Base plate width, t_c:	6	in
Average base plate diameter, d:	24.375	in
Base plate elastic modulus, E_s:	29.0E+06	psi
Base plate yield stress, S_y:	36,000	psi

E_c = 57,000*Sqr(3,000) = 3,122,019 psi

$n = E_s/E_c$ = 29.0E+06 / 3,122,019 = 9.2889

$t_s = (N*A_b) / (\pi*d)$
= (8*0.126) / (π*24.375)
= 0.0132 in

From table 12.4 for k = 0.119661:

K_1 = 2.8413, K_2 = 0.9343
L_1 = 9.2688, L_2 = 16.4044, L_3 = 2.3265

Total tensile force on bolting

T = (12*M - (0.6 - VAccel)*W *(L_1 + L_3)) / (L_2 + L_3)
= (12*3,356.6 - (0.6 - 0.2)*1,629.22 *(9.2688 + 2.3265)) / (16.4044 + 2.3265)
= 2,267.6 lb_f

Tensile stress in bolts use the larger of f_s or bolt preload = 0 psi

f_s = T / (t_s * (d / 2) * K_1)
= 2,267.6 / (0.0132 * (24.375 / 2) * 2.8413)
= 4,975 psi

Total compressive load on foundation

C_c = T + (1 + VAccel)*W + Bolt Preload
= 2,267.6 + (1 + 0.2)*1,629.22 + 0
= 5,063.64 lb_f

Foundation bearing stress

f_c = C_c / (((t_c - t_s) + n*t_s)*(d / 2)*K_2)
= 5,063.64 / ((((6 - 0.0132) + 9.2889*0.0132)*(24.375 / 2)*0.9343)
= 73 psi

As f_c <= 1,658 psi the base plate width is satisfactory.

k = 1 / (1 + f_s / (n*f_c))
= 1 / (1 + 4,975 / (9.2889*73))
= 0.119661

Base plate required thickness (empty, corroded + Seismic)

t_r = $(3*f_c*L^2 / S_p)^{0.5}$
= $(3*73*3.1875^2 / 20{,}000)^{0.5}$
= 0.3331 in

The base plate thickness is satisfactory.

Anchor bolt load (empty, new + Seismic)

P = -(0.6 - VAccel)*W / N + 48 * M / (N*BC)
= -(0.6 - 0.2)*1,632.45 / 8 + 48 * 3,361.1 / (8*28.125)
= 740.48 lb_f

Required area per bolt = P / S_b = 0.037 in^2

The area provided (0.126 in^2) by the specified anchor bolt is adequate.

Support calculations (Jawad & Farr chapter 12, empty, new + Seismic)

Base plate width, t_c: 6 in

Average base plate diameter, d: 24.375 in
Base plate elastic modulus, E_s: 29.0E+06 psi
Base plate yield stress, S_y: 36,000 psi

E_c = 57,000*Sqr(3,000) = 3,122,019 psi

n = E_s/E_c = 29.0E+06 / 3,122,019 = 9.2889

$t_s = (N*A_b) / (\pi*d)$
= (8*0.126) / (π*24.375)
= 0.0132 in

From table 12.4 for k = 0.119678:

K_1 = 2.8413, K_2 = 0.9343
L_1 = 9.2684, L_2 = 16.4042, L_3 = 2.3269

Total tensile force on bolting

$T = (12*M - (0.6 - VAccel)*W *(L_1 + L_3)) / (L_2 + L_3)$
= (12*3,361.1 - (0.6 - 0.2)*1,632.45 *(9.2684 + 2.3269)) / (16.4042 + 2.3269)
= 2,269.41 lb_f

Tensile stress in bolts use the larger of f_s or bolt preload = 0 psi

$f_s = T / (t_s * (d / 2) * K_1)$
= 2,269.41 / (0.0132 * (24.375 / 2) * 2.8413)
= 4,979 psi

Total compressive load on foundation

C_c = T + (1 + VAccel)*W + Bolt Preload
= 2,269.41 + (1 + 0.2)*1,632.45 + 0
= 5,068.94 lb_f

Foundation bearing stress

$f_c = C_c / (((t_c - t_s) + n*t_s)*(d / 2)*K_2)$
= 5,068.94 / (((6 - 0.0132) + 9.2889*0.0132)*(24.375 / 2)*0.9343)
= 73 psi

As f_c <= 1,658 psi the base plate width is satisfactory.

$k = 1 / (1 + f_s / (n*f_c))$
= 1 / (1 + 4,979 / (9.2889*73))
= 0.119678

Base plate required thickness (empty, new + Seismic)

$t_r = (3*f_c*L^2 / S_p)^{0.5}$
= $(3*73*3.1875^2 / 20,000)^{0.5}$
= 0.3332 in

The base plate thickness is satisfactory.

Anchor bolt load (vacuum, corroded + Seismic)

$P = -(0.6 - VAccel)*W / N + 48 * M / (N*BC)$
$= -(0.6 - 0.2)*4{,}807.07 / 8 + 48 * 7{,}594.7 / (8*28.125)$
$= 1{,}436.66\ lb_f$

Required area per bolt = P / S_b = 0.0718 in^2

The area provided (0.126 in^2) by the specified anchor bolt is adequate.

Support calculations (Jawad & Farr chapter 12, vacuum, corroded + Seismic)

Base plate width, t_c:	6	in
Average base plate diameter, d:	24.375	in
Base plate elastic modulus, E_s:	29.0E+06	psi
Base plate yield stress, S_y:	36,000	psi

$E_c = 57{,}000*Sqr(3{,}000) = 3{,}122{,}019$ psi

$n = E_s/E_c = 29.0E+06 / 3{,}122{,}019 = 9.2889$

$t_s = (N*A_b) / (\pi*d)$
$= (8*0.126) / (\pi*24.375)$
$= 0.0132$ in

From table 12.4 for k = 0.129736:

$K_1 = 2.8183,\ K_2 = 0.9737$
$L_1 = 9.024,\quad L_2 = 16.2351,\ L_3 = 2.5209$

Total tensile force on bolting

$T = (12*M - (0.6 - VAccel)*W *(L_1 + L_3)) / (L_2 + L_3)$
$= (12*7{,}594.7 - (0.6 - 0.2)*4{,}807.07 *(9.024 + 2.5209)) / (16.2351 + 2.5209)$
$= 3{,}955.25\ lb_f$

Tensile stress in bolts use the larger of f_s or bolt preload = 0 psi

$f_s = T / (t_s * (d / 2) * K_1)$
$= 3{,}955.25 / (0.0132 * (24.375 / 2) * 2.8183)$
$= 8{,}748$ psi

Total compressive load on foundation

$C_c = T + (1 + VAccel)*W + \text{Bolt Preload}$
$= 3{,}955.25 + (1 + 0.2)*4{,}807.07 + 0$
$= 10{,}178.24\ lb_f$

Foundation bearing stress

$f_c = C_c / (((t_c - t_s) + n*t_s)*(d / 2)*K_2)$
$= 10{,}178.24 / (((6 - 0.0132) + 9.2889*0.0132)*(24.375 / 2)*0.9737)$
= 140 psi

As f_c <= 1,658 psi the base plate width is satisfactory.

$k = 1 / (1 + f_s / (n*f_c))$
$= 1 / (1 + 8{,}748 / (9.2889*140))$
$= 0.129736$

Base plate required thickness (vacuum, corroded + Seismic)

$t_r = (3*f_c*L^2 / S_p)^{0.5}$
$= (3*140*3.1875^2 / 20{,}000)^{0.5}$
$= 0.4626$ in

The base plate thickness is satisfactory.

Baffle Assembly

ASME Section VIII Division 1, 2017 Edition	
Inputs	
Load Orientation	Vertical Load
Elevation Above Datum	0"
Direction Angle	0.00°
Distance from Center of Vessel	0"
Magnitude of Force	300 lb
Loading Conditions	
Present When Operating	Yes
Included in Vessel Lift Weight	Yes
Present When Vessel is Empty	Yes
Present During Test	Yes

Lateral Force #1

ASME Section VIII Division 1, 2017 Edition	
Inputs	
Load Orientation	Lateral Force
Elevation Above Datum	117"
Magnitude of Force	2,480 lb_f
Direction Angle	45.00°
Loading Conditions	
Present When Operating	Yes
Present When Vessel is Empty	Yes
Present During Test	Yes