# TSCR IXC Concrete Storage Pad System: Tank Farm System Infrastructure Upgrades Specification

**B. A. Peterson**
Washington River Protection Solutions LLC

Date Published
September 2019

Prepared for the U.S. Department of Energy
Office of River Protection

P.O. Box 850
Richland, Washington

Contract No.: DE-AC27-08RV14800

This page was intentionally left blank

# TABLE OF CONTENTS

**ABBREVIATIONS, ACRONYMS AND UNITS (2 SHEETS) ..... III**

**1.0 SCOPE ..... 1-1**

1.1 BACKGROUND ..... 1-1

1.2 SYSTEM DESCRIPTIONS ..... 1-1
1.2.1 TSCR IXC Concrete Storage Pad System [Project T1P190] ..... 1-1
1.2.2 TSCR Demonstration Project [Project TD101] ..... 1-2
1.2.3 Project Integration ..... 1-2

1.3 DOCUMENT OVERVIEW ..... 1-4

**2.0 APPLICABLE DOCUMENTS ..... 2-1**

2.1 GOVERNMENT DOCUMENTS ..... 2-2

2.2 NON-GOVERNMENT DOCUMENTS ..... 2-3

2.3 NON-GOVERNMENT NON-CODE OF RECORD DOCUMENTS ..... 2-5

**3.0 STORAGE PAD FUNCTIONS AND REQUIREMENTS ..... 3-1**

3.1 SYSTEM INTERFACE REQUIREMENTS ..... 3-1
3.1.1 TF Upgrades/TSCR Project Design Integration ..... 3-1
3.1.2 Utility and Infrastructure Interface ..... 3-1
3.1.3 Security and Property Protection Interface ..... 3-2

3.2 SYSTEM FUNCTIONS AND FUNCTIONAL PERFORMANCE REQUIREMENTS ..... 3-2
3.2.1 Manage System-Generated Waste and Excess Facilities ..... 3-2

3.3 SAFETY AND ENVIRONMENTAL REQUIREMENTS ..... 3-2
3.3.1 Occupational Radiological Safety Requirements ..... 3-2
3.3.2 Occupational Health and Safety Requirements ..... 3-3
3.3.3 Environmental Requirements ..... 3-3

3.4 SYSTEM DESIGN REQUIREMENTS ..... 3-4
3.4.1 General Design Requirements ..... 3-4
3.4.2 Site ..... 3-4
3.4.3 Fire Protection ..... 3-6
3.4.4 Fencing/Walls/Lighting ..... 3-6
3.4.5 Transfer Path Design Requirements ..... 3-6
3.4.6 Balance of Facility (BOF) Pad and IXC Storage Pad Design Requirements ..... 3-7
3.4.7 IXC Storage Pad Sizing Requirements ..... 3-8
3.4.8 Transport Vehicle ..... 3-8
3.4.9 Utilities and Infrastructure ..... 3-8

3.5 OTHER REQUIREMENTS ..... 3-10
3.5.1 Welding Requirements ..... 3-10
3.5.2 Hoisting and Rigging Requirements ..... 3-10
3.5.3 Transportability ..... 3-10

3.5.4 Quality Assurance ..... 3-10
3.5.5 Nameplates and Product Marking ..... 3-11
3.5.6 Decontamination and Decommissioning ..... 3-11
3.5.7 Maintenance Requirements ..... 3-11
3.5.8 Drawing requirements ..... 3-11
3.5.9 Civil Surveys ..... 3-11

**4.0 DESIGN VERIFICATION ..... 4-1**

**5.0 REFERENCES ..... 5-1**

**6.0 APPENDICES ..... 6-1**

6.1 SYSTEM REQUIREMENTS MATRIX ..... 6-1

6.2 UTILITY SCAN SUMMARY SHEET ..... 6-7

6.3 TOPOGRAPHICAL SURVEY ..... 6-20

6.4 PRELIMINARY FIRE HAZARD ANALYSIS ..... 6-23

6.5 TSCR IXC CONCRETE STORAGE PAD SYSTEM SAFETY SIGNIFICANT DESIGN PARAMETERS ..... 6-24

6.6 TSCR ANCHORING BASE FOR STORAGE PAD ..... 6-25

6.7 IXC GENERAL ARRANGEMENT ..... 6-29

6.8 FILTER GENERAL ARRANGEMENT ..... 6-30

## LIST OF FIGURES

Figure 1-1. TSCR IXC Concrete Storage Pad System Layout ..... 1-3

## LIST OF TABLES

Table 2-1. Government Documents ..... 2-2
Table 2-2. Non-Government Documents (2 sheets) ..... 2-3
Table 2-3. Non-Code of Record Documents ..... 2-5
Table 3-1. TSCR Upgrades Internal and External Interfaces ..... 3-1
Table 3-2. NPH Design Category ..... 3-5
Table 6-1. System Requirements Matrix ..... 6-2

# ABBREVIATIONS, ACRONYMS AND UNITS (2 SHEETS)

## Abbreviations and Acronyms

| | |
|---|---|
| AP Farm | 241-AP Tank Farm |
| ACI | American Concrete Institute |
| AISC | American Institute of Steel Construction |
| ASCE | American Society of Civil Engineers |
| ASME | American Society of Mechanical Engineers |
| AWS | American Welding Society |
| B&PVC | Boiler & Pressure Vessel Code |
| BOF | Balance of Facility |
| CBDPP | Chronic Beryllium Disease Prevention Program |
| CFR | Code of Federal Regulations |
| COR | Code of Record |
| CST | Crystalline Silicotitanate |
| DA | Design Authority |
| DFLAW | Direct Feed Low Activity Waste |
| DOE | United States Department of Energy |
| FPE | Fire Protection Engineer |
| HSESP | Hanford Site Electrical Safety Program |
| IBC | International Building Code |
| ICC | International Code Council |
| ICR | Interpretation/Clarification Request |
| IDF | Integrated Disposal Facility |
| ILAW | Immobilized Low-Activity Waste |
| ILST | Interim LAW Storage Tank |
| IXC | Ion Exchange Column |
| LAW | Low-Activity Waste |
| MSA | Mission Support Alliance, LLC |
| NDC | Natural Phenomena Design Categories |
| NDE | Non Destructive Examination |
| NFPA | National Fire Protection Association |
| NPH | Natural Phenomenon Hazard |
| NRTL | Nationally Recognized Testing Laboratory |
| ORP | U.S. Department of Energy, Office of River Protection |
| PDC | Precipitation Design Category |
| Project T1P190 | Tank Farm Upgrades |
| Project TD101 | Tank Side Cesium Removal (TSCR) Demonstration Project |

| | |
|---|---|
| QA | Quality Assurance |
| RPP | River Protection Project |
| SDC | Seismic Design Category |
| SSCs | Systems, Structure, and Components |
| TOC | Tank Operations Contractor |
| TSCR | Tank Side Cesium Removal Demonstration Project |
| UL | Underwriters Laboratory, Inc |
| VDC | Volcanic Design Category |
| WAC | Washington Administrative Code |
| WDC | Wind Design Category |
| WRPS | Washington River Protection Solutions, LLC |
| WSDOH | Washington State Department of Health |
| WTP | Waste Treatment and Immobilization Plant |

**Units**

| | |
|---|---|
| ft | feet |
| gpm | gallons per minute |
| hrs | hours |
| kV | kilovolt |
| psig | pounds per square inch gage |
| VAC | volt alternating current |

# 1.0 SCOPE

The scope of this document establishes the project level functional, performance, interface, and design requirements for the Tank Side Cesium Removal Demonstration Project (TSCR) Ion Exchange Column (IXC) Concrete Storage Pad System, which is part of Tank Farm Upgrades Project [Project T1P190].

## 1.1 BACKGROUND

**Project Scope:**
The TSCR IXC Concrete Storage Pad System [Project T1P190] includes the following subsystems: IXC Storage Pad, Balance of Facilities (BOF) Pad, Transfer Path, Transport Vehicle, and Fencing/Walls/Lighting.

**Mission Objectives**:
The Department of Energy (DOE) Office of River Protection (ORP) is responsible for the management and completion of the River Protection Project (RPP) mission, which is to retrieve, treat and store waste in a manner that is safe, economic, and protects the environment. The initial phase of the RPP mission is the Direct Feed Low Activity Waste (DFLAW) Program, which involves several Hanford site facilities including the Hanford Tank Farms, Waste Treatment and Immobilization Plant (WTP) Low Activity Waste (LAW Facility), and Integrated Disposal Facility (IDF). The DFLAW Program mission is to remove cesium from 241-AP Tank Farm (AP Farm) supernatant using the TSCR Demonstration Project, feeding the conditioned waste to AP-106, then transferring the waste to the WTP LAW Facility which will produce immobilized low-activity waste (ILAW) for disposal in IDF.

**Mission Scope**:
The TSCR Project utilizes IXCs, containing non-elutable media Crystalline Silicotitanate (CST) [or Buyer approved non-elutable equivalent to CST], to remove cesium from tank supernatant waste. Spent IXCs are to be handled between the TSCR Process Enclosure (see Figure 1-1), and moved (via fork truck) on a dedicated transfer path to an interim concrete storage pad.

## 1.2 SYSTEM DESCRIPTIONS

The TSCR IXC Concrete Storage Pad System [Project T1P190] interfaces with the TSCR Demonstration Project [Project TD101] in many ways. System descriptions for both Projects are listed below and can be identified on Figure 1-1.

### 1.2.1 TSCR IXC Concrete Storage Pad System [Project T1P190]

The TSCR IXC Concrete Storage Pad System is comprised of the following subsystems:

a) IXC Storage Pad: A concrete pad used for interim storage of spent IXCs generated by the TSCR Demonstration Project [Project TD101].

b) Balance of Facilities (BOF) Pad: A concrete pad that will support an Emergency Shower and the following TSCR Demonstration Project [Project TD101] equipment: Process

Enclosure, Ancillary Enclosure, Control Enclosure, Ventilation Blower Skid, and Electrical Transformer. The BOF Pad will also provide a staging area for three IXCs and space for the Transport Vehicle to maneuver with a TSCR IXC attached, see Figure 1-1. [Engineering Requirement]

c) Transfer Path: A concrete path that connects the BOF Pad and the IXC Storage Pad.

d) Transport Vehicle: A fork truck vehicle with lifting yoke that removes IXCs and filters from a delivery trailer, transports IXCs and filters into and out of the TSCR Process Enclosure, and transports spent IXCs from the BOF Pad to the IXC Storage Pad.

e) Fencing/Walls/Lighting: Fencing and lighting on all sides of the BOF and IXC Storage Pad. Concrete walls are used on the BOF Pad, in lieu of security fencing, when required to serve multiple purposes such as physical security, dose protection and vehicle barrier.

### 1.2.2 TSCR Demonstration Project [Project TD101]

The TSCR Demonstration Project [Project TD101] is a separate project under a separate contract and it is comprised of the following subsystems:

a) Process Enclosure: An enclosure that contains the IXCs, filters, media trap, treated waste delay tank, gamma monitors, sump pump, process piping, and other components and instruments required for treating liquid waste.

b) Ancillary Enclosure: An enclosure that contains support equipment necessary for operating the Process Enclosure, to include a compressed air system, potable water tank, softened water system, caustic drums and injection system, and a fire suppression system.

c) Control Enclosure: An enclosure that contains personnel and equipment necessary to monitor and maintain the functional operation of the Process and Ancillary Enclosures.

d) Ventilation Skid: A mechanical feature used to ventilate the Process Enclosure.

### 1.2.3 Project Integration

a) TSCR Demonstration Project [Project TD101] subsystems mentioned above will be integrated into the BOF Pad design.

b) TSCR Anchoring Base (see Appendix 6.6) provided by TSCR Demonstration Project [Project TD101] will be integrated into the IXC Storage Pad design. The TSCR Anchoring Base will restrain the IXC from sliding and tip-over when installed on the IXC Storage Pad.

c) The IXC and filter design provided by the TSCR Demonstration Project [Project TD101] will be integrated into the Transport Vehicle Lifting Yoke design. The lifting yoke will interface with the lifting trunnions on both the IXC and filter.

**Figure 1-1. TSCR IXC Concrete Storage Pad System Layout**

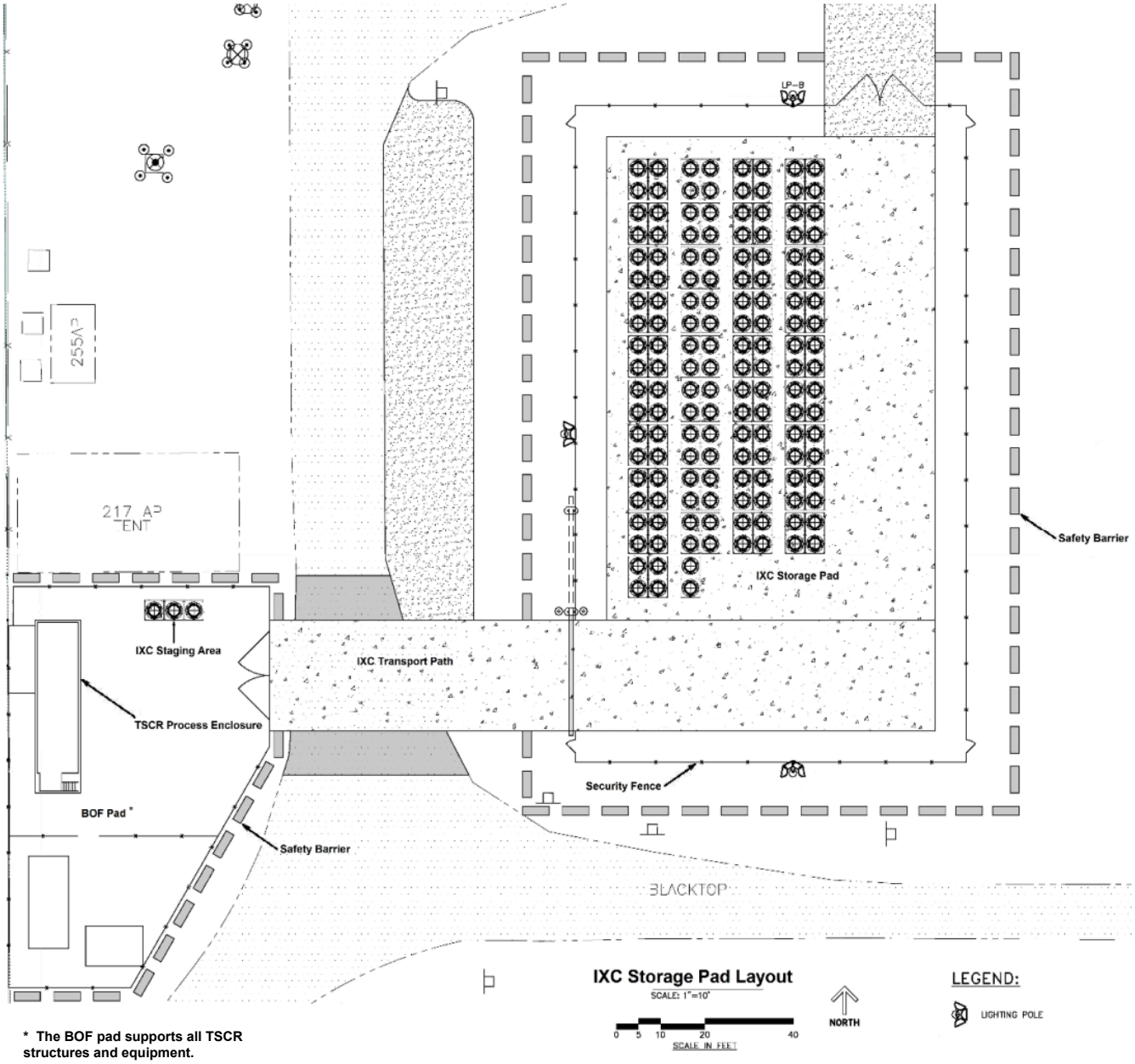


* The BOF pad supports all TSCR structures and equipment.

## 1.3 DOCUMENT OVERVIEW

This document defines the functional, performance, interface, and design requirements for design, construction, and operation of the TSCR IXC Concrete Storage Pad System. This document summarizes the upper level requirements derived from functions and requirements analysis as well as government, Hanford Site specific, and industry codes, standards, and regulations. As such, this document also guides the preparation of lower tier documents that define TSCR IXC Concrete Storage Pad System and associated subsystems.

This document is developed and follows the annotated outline in accordance to TFC-ENG-DESIGN-C-01, "Development of System and Subsystem Specifications." The use of words "shall," should," "may," and "will" within this specification express the following meanings:

- Shall – Denotes a requirement.
- Should – Denotes a recommendation. If a "should" recommendation cannot be satisfied, justification of an alternative design shall be submitted to the Project Design Authority for approval.
- May – Denotes a recommendation.
- Will – Denotes a statement of fact.

# 2.0 APPLICABLE DOCUMENTS

This section lists only those documents cited as requirements documents in Sections 3.0 and 4.0. The references include the title and/or revision number or date of revision as applicable.

Except in those instances where Washington State has been granted regulatory authority by the Federal Government, the hierarchical relationship among requirements specified in Section 3.0 is as follows:

- Federal requirements [e.g., Code of Federal Regulations (CFR)]
- Washington State requirements [e.g., Washington Administrative Code (WAC)]
- Local ordinances
- U.S. Department of Energy Orders and Standards
- National consensus codes and standards
- Hanford Site-specific codes and standards (including Tank Operations Contract (TOC) standards).

This hierarchy establishes the order of precedence of requirements levied in this specification. In the event of conflict between two requirements, the more conservative requirement shall apply. The Design Authority (DA) shall be notified of any conflict.

TOC specifications may contain requirements more conservative than those levied by the document hierarchy listed above (e.g., to address the need for more stringent site-specific requirements). The Design Authority shall approve such requirements. However, TOC specifications shall not contain requirements less conservative than those levied by the document hierarchy listed above, and the Design Authority shall not approve such requirements.

The documents of the exact issue shown in Table 2-1 and Table 2-2 are flowed down from the Code of Record (COR) found in RPP-SPEC-62049, *Tank Farm System Infrastructure Upgrades Specification – Code or Record.* The revision or edition of each document is maintained in RPP-RPT-62049.

The documents of the exact issue shown in Table 2-3, as flowed down from RPP-SPEC-62049, *Tank Farm System Infrastructure Upgrades Specification – Code of Record* form a part of this specification to the extent specified herein but are not considered to be COR documents

## 2.1 GOVERNMENT DOCUMENTS

**Table 2-1. Government Documents**

| Document Number | Title |
|---|---|
| **Code of Federal Regulations (CFR); Washington, D.C.** | |
| 10 CFR 835 | *Occupational Radiation Protection* |
| 29 CFR 1926.1408, Appendix A | *Power line safety (up to 350 kV) – equipment operations*, "Limited Approach Boundaries for Overhead Lines" |
| 40 CFR 264.14 | *Standards for Owners and Operators of Hazardous Waste Treatment, Storage, and Disposal Facilities* - Security |
| 40 CFR 264.31 | *Standards for Owners and Operators of Hazardous Waste Treatment, Storage, and Disposal Facilities*- Design and operation of facility |
| **U.S. Department of Energy (DOE); Washington, D. C.** | |
| DOE M 435.1-1, Chg. 1 | *Radioactive Waste Management Manual* |
| DOE O 414.1D | *Quality Assurance* |
| DOE O 420.1C | *Facility Safety* |
| DOE O 435.1 Chg. 1 | *Radioactive Waste Management* |
| DOE O 458.1, Chg. 2 | *Radiation Protection of the Public and the Environment* |
| DOE/RL-92-36 | *Hanford Site Hoisting and Rigging Manual* |
| DOE-STD-1020 | *Natural Phenomena Hazards Design and Evaluation Criteria for Department of Energy Facilities* |
| DOE-STD-1066 | *Fire Protection* |
| **Washington Administrative Code (WAC); Olympia, Washington** | |
| WAC 296-46B-010(1) | *Electrical Safety Standards, Administration, Inspections, and Installation* – General – Adopted Standards |
| WAC 173-303-630(5)(c) | *Use and management of containers* – Management of Containers |
| WAC 173-303-630(7)(c)(i) | *Use and management of containers* – Containment |
| **Washington State Department of Health (WSDOH), Olympia, Washington** | |
| WSDOH 331-123 | *Water System Design Manual* |

## 2.2 NON-GOVERNMENT DOCUMENTS

**Table 2-2. Non-Government Documents (2 sheets)**

| Document Number | Title |
|---|---|
| **American Concrete Institute (ACI); Farmington Hills, Michigan** | |
| ACI 301 | *Specification for Structural Concrete* |
| ACI 302.1R | *Guide to Concrete Floor and Slab Construction* |
| ACI 318 | *Building Code Requirements for Structural Concrete and Commentary* |
| **American Institute of Steel Construction (AISC), Chicago, Illinois** | |
| AISC 325 | *Steel Construction Manual* |
| AISC 360 | *Specification for Structural Steel Buildings* |
| **American Society of Civil Engineers (ASCE); Reston, Virginia** | |
| ASCE 7 | *Minimum Design Loads for Buildings and Other Structures* |
| **American Society of Mechanical Engineers (ASME); New York, New York** | |
| ASME Boiler & Pressure Vessel Code (B&PVC) | *B&PVC – Rules for Construction of Pressure Vessel* |
| ASME NQA-1 2008/2009 Addenda | *Quality Assurance Requirements for Nuclear Facility Applications*. |
| **American Welding Society (AWS); Miami, Florida** | |
| AWS D1.1/D1.1M | *Structural Welding Code-Steel* |
| AWS D1.4/D1.4M | *Structural Welding Code-Reinforcing Steel* |
| AWS D1.6/D1.6M | *Structural Welding Code-Stainless Steel* |
| **Headquarters Departments of the Army and the Air Force** | |
| TM5-809-12 | *Technical Manual – Concrete Floor Slabs on Grade Subjected to Heavy Loads* |
| **International Code Council (ICC); Washington, D.C.** | |
| IBC | *International Building Code®*[1] |
| **National Fire Protection Association (NFPA); Quincy, Massachusetts** | |
| NFPA 24 | *Standard for the Installation of Private Fire Service Mains and Their Appurtenances* |
| NFPA 101 | *Life Safety Code®*[2] |
| **Other Publications; Washington River Protection Solutions, LLC, Richland, Washington** | |
| TFC-ENG-STD-01 | "Human Factors in Design" |
| TFC-ENG-STD-02 | "Environmental/Seasonal Requirements for TFC Systems, Structures, and Components" |
| TFC-ENG-STD-06 | "Design Loads for Tank Farm Facilities" |
| TFC-ENG-STD-10 | "Drawing Standard" |

[1] International Building Code® is a registered trademark of the International Code Council of Washington, D.C.
[2] Life Safety Code® is a registered trademark of the National Fire Protection Association of Quincy, MA.

**Table 2-2. Non-Government Documents (2 sheets)**

| Document Number | Title |
|---|---|
| TFC-ENG-STD-15 | "Standard for Raceway Systems and Flexible Cords & Cables." |
| TFC-ENG-STD-39 | "Civil Survey for Tank Farm Facilities" |
| TFC-ENG-STD-41 | "Electrical Installations" |
| TFC-ESHQ-FP-STD-02 | "Fire Protection Design Criteria" |
| TFC-ESHQ-FP-STD-06 | "Fire Safety Analysis and Fire Protections Assessment Requirements" |
| TFC-ESHQ-IH-STD-13 | "Illumination" |

## 2.3 NON-GOVERNMENT NON-CODE OF RECORD DOCUMENTS

**Table 2-3. Non-Code of Record Documents**

| Document Number | Title |
|---|---|
| **Hanford Site, Washington** | |
| 200E-2018-0016 | *LAWPS, TSCR, and Interim Storage Pad Facilities* |
| DOE-0342 | *Hanford Site Chronic Beryllium Disease Prevention Program* |
| HNF-4492 | *Interface Control Document between Washington River Protection Solutions, LLC and Mission Support Alliance, LLC for Electric Utilities Distribution System* |
| HNF-4493 | *Interface Control Document between Washington River Protection Solutions, LLC (WRPS) and Mission Support Alliance, LLC (MSA) the Water Utilities Distribution System Manager* |
| HNF-SD-GN-ER-501 | *Natural Phenomena Hazards, Hanford Site, Washington* |
| ICR 2017-02 | *Hanford Fire Marshal's Office Interpretation/Clarification Request Hanford Fire Water Supply Evaluation* |
| **Washington River Protection Solutions, LLC, Richland, Washington** | |
| RPP-8360 | *Lifting Attachment and Lifted Item Evaluation* |
| RPP-RPT-60603 | *Interface Management Agreement between TF Upgrades Project (Project #T1P190) and the Tank Side Cesium Demonstration Project (Project #TD101)* |
| RPP-RPT-61401 | *LAWPS System South & East of AP Tank Farm Geotechnical Engineering Report (22-1-40041-070) – (Project T5L01)* |
| RPP-SPEC-62049 | *Tank Farm System Infrastructure Upgrades Specification – Code of Record* |
| TFC-ENG-DESIGN-C-10 | "Engineering Calculations" |
| TFC-ENG-DESIGN-C-32 | "Utility Calculation Software Management Plan" |
| TFC-ENG-DESIGN-C-52 | "Technical Reviews" |
| TFC-ENG-DESIGN-C-55 | "Design Subcontract Deliverable Review" |
| TFC-ENG-DESIGN-P-17 | "Design Verification" |
| TFC-ENG-FACSUP-C-25 | "Hoisting and Rigging" |
| TFC-ESHQ-RP MON-C-18 | "Radiological Posting" |
| TFC-PLN-02 | "Quality Assurance Program Description" |
| TFC-PLN-29 | "Nuclear Maintenance Management Plan" |

# 3.0 STORAGE PAD FUNCTIONS AND REQUIREMENTS

## 3.1 SYSTEM INTERFACE REQUIREMENTS

The TSCR IXC Concrete Storage Pad System design shall abide by the applicable external interface requirements for Hanford Site utilities and services contracted through the Mission Support Alliance (MSA) as well as internal interface requirements from other Tank Farms Projects and infrastructure. The controlling documents for these internal and external interfaces are shown in Table 3-1.

**Table 3-1. TSCR Upgrades Internal and External Interfaces**

| ***Internal Interface Controlling Documents*** | |
|---|---|
| TSCR Upgrades interface with the TSCR Project | RPP-RPT-60603, *Interface Management Agreement between TF Upgrades Project (Project #T1P190) and the Tank Side Cesium Demonstration Project (Project #TD101)* |
| ***External Interface Documents*** | |
| Electrical Utility Services | HNF-4492, *Interface Control Document between Washington River Protection Solutions, LLC and Mission Support Alliance, LLC for Electric Utilities Distribution System* |
| Water Utility Service | HNF-4493, *Interface Control Document between Washington River Protection Solutions, LLC (WRPS) and Mission Support Alliance, LLC (MSA) the Water Utilities Distribution System Manager* |

### 3.1.1 TF Upgrades/TSCR Project Design Integration

The technical integration of the TSCR IXC Concrete Storage Pad System and the TSCR Project is critical as each Project has different Design Agents. To insure proper integration, interfacing requirements are documented in RPP-RPT-60603, *Interface Management Agreement between TF Upgrades Project (Project #T1P190) and the Tank Side Cesium Demonstration Project (Project #TD101)*.

### 3.1.2 Utility and Infrastructure Interface

The TSCR IXC Concrete Storage Pad System design may require an interface with existing Hanford Site utilities and infrastructure as needed to support construction, column transfer operations, and interim storage operations [TOC Contract – J.3 Table].

### 3.1.3 Security and Property Protection Interface

TSCR IXC Concrete Storage Pad System Security and Property Protection other than that specified below shall be determined based on security assessments, hazards analysis, safety analysis, and subsystem quality level designations [Project Requirement].

## 3.2 SYSTEM FUNCTIONS AND FUNCTIONAL PERFORMANCE REQUIREMENTS

The River Protection Project (RPP) Functional Hierarchy is described in RPP-51303, *River Protection Project Functions and Requirements.*

RPP mission functions and subordinate performance functions applicable to the TSCR IXC Concrete Storage Pad System are defined in RPP-SPEC-62049, *Tank Farm System Infrastructure Upgrades Specification – Code of Record.*

### 3.2.1 Manage System-Generated Waste and Excess Facilities

#### 3.2.1.1 Manage Secondary Solid Waste

a) The TSCR IXC Concrete Storage Pad System shall provide removal, movement, and placement of spent, cesium loaded IXCs from the TSCR Process Enclosure to the interim storage pad [Project Requirement].

b) Radioactive waste shall be managed in accordance with the applicable requirements in DOE O 435.1, *Radioactive Waste management* and DOE M 435.1-1, *Radioactive Waste Management Manual.*

## 3.3 SAFETY AND ENVIRONMENTAL REQUIREMENTS

### 3.3.1 Occupational Radiological Safety Requirements

a) The TSCR IXC Concrete Storage Pad System design shall protect personnel safety in accordance with 10 CFR 835, *Occupational Radiation Protection.*

b) The TSCR IXC Concrete Storage Pad System shall protect the public and the environment against unwarranted risk from radiation related to radiological activities in accordance with DOE O 458.1, *Radiation Protection of the Public and the Environment.*

c) Outside areas used for pedestrian or vehicle traffic directly adjacent to the TSCR IXC Storage Pad and BOF Pad shall limit the dose rate at the fence or wall line to less than or equal to 0.8 mrem/hr in accordance with TFC-ESHQ-RP_MON-C-18, Radiological Posting.

d) Areas outside the TSCR fence line that are expected to be continuously occupied (individual occupancy of 2,000 hours per year), such as the TSCR Control Enclosure, shall have dose rates limited to less than 0.05 mrem/hr in accordance with TFC-ESHQ-RP_MON-C-18, Radiological Posting.

### 3.3.2 Occupational Health and Safety Requirements

a) The design shall include features that protect personnel safety, incorporate engineering controls, and minimize the reliance on the use of personnel protective equipment during routine functions, thus improving system ergonomics [TFC-ENG-STD-01, "Human Factors in Design"].

b) The design shall include adequate space to accommodate steering of the Transport Vehicle to access the TSCR Process Enclosure located on the BOF Pad, have adequate room to maneuver (e.g. back up, turn around, etc.), move along the Transfer Path, enter the IXC Storage Pad and place or remove a spent TSCR IXC [Project Requirement].

c) The design shall include accommodation for ground personnel who support the removal, transport and placement of the TSCR IXCs [TFC-ENG-STD-01, "Human Factors in Design"].

d) The TSCR IXC Concrete Storage Pad System design shall protect personnel safety in accordance with 10 CFR 852, *Chronic Beryllium Disease Prevention Program* and DOE-0342, *Hanford Site Chronic Beryllium Disease Prevention Program (CBDPP).*

### 3.3.3 Environmental Requirements

a) The TSCR IXC Concrete Storage Pad System shall be designed to the applicable natural environmental conditions specified in DOE O 420.1C *Facility Safety,* Attachment 2, Chapter IV, Natural Phenomena Hazards Mitigation; DOE-STD-1020, *Natural Phenomena Hazards Analysis and Design Criteria for DOE Facilities;* HNF-SD-GN-ER-501, Natural Phenomena Hazards, Hanford Site, Washington; TFC-ENG-STD-02, "Environmental/Seasonal Requirements for TOC Systems, Structures, and Components (SSCs);" and TFC-ENG-STD-06, "Design Loads for Tank Farm Facilities."

b) The design shall identify and protect under and over crossings of utilities [Operational Requirement].

c) The IXC Storage Pad and BOF Pad shall slope to drain and remove liquid resulting from precipitation in accordance with WAC 173-303-630(7)(c)(i), *Use and management of containers* – Containment.

d) The IXC Storage Pad and the BOF Pad design shall prevent unknowing entry and minimize the possibility of unauthorized entry in accordance 40 CFR 264.14, *Standards for Owners and Operators of Hazardous Waste Treatment, Storage, and Disposal Facilities*- Security.

e) The spent TSCR IXC arrangement shall consist of rows that are a maximum of two IXCs wide and any two rows of IXCs having at least a 30-inch separation in accordance with WAC 173-303-630(5)(c), *Use and management of containers* – Management of containers.

## 3.4 SYSTEM DESIGN REQUIREMENTS

### 3.4.1 General Design Requirements

a) The design life of the BOF Pad, Transfer Path and IXC Storage Pad shall be for a minimum of 50 years to be consistent with the TSCR Demonstration Project [Project TD101] IXC design life [Project Requirement].

b) The TSCR IXC Concrete Storage Pad System shall be permanently installed system and the basis of design is DOE-STD-1020, *Natural Phenomenon Hazards Analysis and Design Criteria for DOE Facilities* and the International Building Code (IBC).

c) The TSCR IXC Concrete Storage Pad System shall be designed in accordance with 40 CFR 264.31, *Standards for Owners and Operators of Hazardous Waste Treatment, Storage, and Disposal Facilities*- Design and operation of facility.

d) The BOF Pad that directly supports the Process Enclosure and Vehicle Barrier Wall shall be considered safety significant with the remaining portions of the BOF Pad (e.g., Ancillary Enclosure, Control Enclosure, Emergency Shower, etc.) and Transfer Path considered general service in accordance with Appendix 6.5, TSCR Concrete Storage Pad System Safety Significant Design Parameters[3] (see PE.8. and PE.9.).

e) TSCR IXC Concrete Storage Pad System shall comply with the requirements of TFC-ENG-STD-01, "Human Factors in Design."

f) The TSCR IXC Concrete Storage Pad System shall be designed for maintenance and operations in compliance with the requirements of TFC-PLN-29, "Nuclear Maintenance Management Program."

### 3.4.2 Site

a) The TSCR IXC Concrete Storage Pad System will reside east of the AP Tank Farm (AP Farm), see Figure 1-1. This area has been approved per site evaluation 200E-2018-0016, *LAWPS, TSCR, and Interim Storage Pad Facilities*.

b) Design of the TSCR IXC Concrete Pad Storage System shall use the Utility Scan Summary Sheet and Topographical Survey data found in Appendix 6.2 and Appendix 6.3, respectively.

c) Grade of the BOF Pad, Transfer Path, and IXC Storage Pad shall be such that no ramp is needed between any two entities [Project Requirement].

d) General through traffic along 4$^{th}$ Street and across the transfer path, will remain open unless a temporary road closure is required (e.g., IXC unloading/loading, IXC transfer between BOF and IXC Storage Pad, etc.) [Project Requirement].

[3] A demarcation is required for any general service pad adjacent to a safety significant pad.

e) Safety significant vehicle barriers shall be located between loaded IXCs and vehicle traffic capable of resulting in a high-energy impact with any of the loaded IXCs inside the Process Enclosure or on the Spent IXC Storage Pad. Vehicle barriers shall also be of sufficient shape, dimensions, and mass to reduce the speed of a 6,000-lb vehicle from 25 mph to less than 10 mph in a direct (i.e., perpendicular) impact scenario in accordance with Appendix 6.5, TSCR Concrete Storage Pad System Safety Significant Design Parameters (see PE.9.).

#### 3.4.2.1 Structural Analysis and Design

a) The BOF Pad, Transfer Path, and IXC Storage Pad design shall satisfy consensus standard requirements and be sufficiently designed to satisfy stress, serviceability, displacement and functional requirements including American Concrete Institute (ACI) 301, *Specification for Structural Concrete;* ACI 318, *Building Code Requirements for Structural Concrete and Commentary*; American Institute of Steel Construction (AISC) 325, *Steel Construction Manual – 14th Edition,* and AISC 360, *Specification for Structural Steel Buildings*; and TM5-809-12, *Technical Manual – Concrete Floor Slabs on Grade Subjected to Heavy Loads,* and the guidance provided in ACI 302.1R, *Guide to Concrete Floor and Slab Construction.*

b) Constructability shall be considered in the design process [Good Engineering Practice].

#### 3.4.2.2 Natural Phenomenon Hazards (NPH)

a) The TSCR IXC Concrete Storage Pad System shall be designed in accordance with NPH requirements provided in TFC-ENG-STD-06, "Design Loads for Tank Farm Facilities" and the applicable seismic design criteria and limit states given in Appendix 6.5, TSCR IXC Concrete Storage Pad System Safety Significant Design Parameters. NPH Design Category shall be uniformly applied as shown in Table 3-2.

**Table 3-2. NPH Design Category**

| NPH | NDC-1 Designation | NDC-2 Designation | NDC-3 Designation |
|---|---|---|---|
| Wind Design Category | WDC-1 | WDC-2 | WDC-3 |
| Seismic Design Category | SDC-1 | SDC-2 | SDC-3 |
| Precipitation Design Category (Snow) | PDC-1 | PDC-2 | PDC-3 |
| Volcanic Design Category (Ashfall) | VDC-1 | VDC-2 | VDC-3 |

**Note:** Interactions between NDC-1, NDC-2, and NDC-3 SSCs shall be considered.

b) For Geotechnical Soil Parameters[4], RPP-RPT-61401: *LAWPS System South & East of AP Tank Farm Geotechnical Engineering Report (Rev.0)* shall be used.

[4] The site subsurface conditions of the TSCR IXC Concrete Storage Pad System correspond with Site Class C. [WRPS Contract No. 65668-000, *LAWPS System South & East of AP Tank Farm Geotechnical Engineering Report (Rev.0)*].

c) For seismic design parameters, Tank Farm Standards TFC-ENG-STD-06, "Design Loads for Tank Farm Facilities" shall be used. Where soil properties are known in sufficient detail to determine a site class other than C, the Design Special Accelerations, $S_{DS}$ and $S_{D1}$, shall be adjusted by the appropriate Site Coefficients, $F_a$ and $F_v$, listed in Tables 11.4-1 and 11.4-2 in American Society of Civil Engineers (ASCE) 7-10, *Minimum Design Loads for Buildings and Other Structures*.

### 3.4.3 Fire Protection

*a)* The TSCR IXC Concrete Storage Pad System design shall incorporate the applicable requirements of DOE O 420.1C *Facility Safety,* Attachment 2, Chapter II, *Fire Protection.*

b) A fire hazard analysis for the TSCR Concrete Storage Pad System shall be performed in accordance with DOE-STD-1066, *Fire Protection* as implemented by TFC-ESHQ-FP-STD-06, 'Fire Safety Analysis and Fire Protections Assessment Requirements." As a result of this assessment, additional requirements may be added to this specification.

c) Raw water is required for the TSCR IXC Concrete Storage Pad System to supply fire water to fire hydrants. The applicable requirements DOE-STD-1066*, Fire Protection* shall be followed for fire suppression (sprinklers and/or hydrants) water supplies.

d) Fire protection design shall be in accordance with TFC-ESHQ-FP-STD-02, "Fire Protection Design Criteria".

### 3.4.4 Fencing/Walls/Lighting

a) The BOF and IXC Storage Pads shall have perimeter fencing. The fence requirements are expected to be similar to those found in existing Tank Farm Facilities [Project Requirement]. Concrete wall(s) shall be used on the BOF Pad, in lieu of security fencing, when required to serve multiple purposes such as physical security, dose protection and vehicle barrier.

b) The fence design will include Controlled Access Points, to include fork truck enter/exits and personnel gates [Project Requirement].

c) Gate crash-out hardware shall be considered for the Controlled Access Points in accordance with NFPA 101, *Life Safety Code*.

d) The BOF and IXC Storage Pad shall have an average of 3 ft-candles illumination along the fence line in accordance with the requirements in TFC-ESHQ-IH-STD-13, "Illumination".

### 3.4.5 Transfer Path Design Requirements

a) The Transfer Path shall be concrete [Project Requirement].

b) The Transfer Path shall be designed to accommodate the Transport Vehicle carrying an IXC [Project Requirement]. IXC dimensions and lifting weight are provided in Appendix 6.7, IXC General Arrangement [Project TD101].

c) The Transfer Path shall be designed to accommodate emergency service vehicles and crane lifting an IXC [Operational Requirement].

### 3.4.6 Balance of Facility (BOF) Pad and IXC Storage Pad Design Requirements

a) The design of the BOF and IXC Storage Pads shall incorporate the applicable lifting, transportation (e.g., Transport Vehicle), and storage of high level waste in accordance with DOE M 435.1-1, chg. 1, *Radioactive Waste Management Manual*.

b) The IXC Storage Pad shall have discretely placed steel embed plates flush with the top surface to secure the TSCR Anchoring Base (see Appendix 6.6) [Project TD101]. The intent is to have bolted connections between the TSCR Anchoring Base and steel embed plates [Engineering Requirement].

c) Anchor loads and detailed drawings of the TSCR Anchoring Base (see Appendix 6.6) will be supplied by TSCR Demonstration Project [Project TD101] [Engineering Requirement].

d) The BOF Pad design shall support an Emergency Shower, Security/Dose Protection/Vehicle Barrier Wall, and the following TSCR Demonstration Project [Project TD101] equipment: Process Enclosure, Ancillary Enclosure, Control Enclosure, Ventilation Blower Skid, and Electrical Transformer. The BOF Pad shall also provide a staging area for three IXCs and space for the Transport Vehicle to maneuver with a TSCR IXC attached, see Figure 1-1. Equipment loads will be determined by the Tank Farm Upgrades Project [Project T1P190].

e) The BOF and IXC Storage Pad design cannot damage (e.g., puncture) the IXCs provided by the TSCR Demonstration Project [Project TD101] in a tip over event, breaching the safety function of the IXC. This can be achieved by eliminating protrusions in the pad design [Nuclear Safety Requirement].

f) The BOF and IXC Storage Pads shall be designed to accommodate the Transport Vehicle carrying an IXC [Project Requirement]. IXC dimensions and lifting weight are provided in Appendix 6.7, IXC General Arrangement [Project TD101].

g) The BOF Pad shall slope a minimum of 1% to minimize the risk of a fork truck fuel spill and fire encroaching on the TSCR Process Enclosure in accordance with Preliminary Fire Hazard Analysis recommendation 7 found in Appendix 6.4. For the area directly under the TSCR Process Enclosure, the pad shall be level (no slope) in the north/south direction and slope downward 0.5%, from east to west, to ensure adequate drainage of accumulated liquid to Process Enclosure floor sump [Project TD101 Requirement]. Standard concrete finishes and tolerances shall apply.

### 3.4.7 IXC Storage Pad Sizing Requirements

a) Allocated space for the IXC Storage Pad is 95 ft wide (east-west) and 177 ft long (north-south). The final pad sizing shall be adjusted to optimize the space while ensuring all requirements are met [Engineering Requirement].

b) The IXC Storage Pad will be designed to hold a minimum of 150 spent TSCR IXCs. TSCR Anchoring Base and IXC dimensions and weights are defined in Appendixes 6.6 and 6.7, respectively [Project TD101].

### 3.4.8 Transport Vehicle

a) The Transport Vehicle with integrated lifting yoke shall be capable of independently handling an IXC and filter throughout the TSCR IXC Concrete Storage Pad System [Project Requirement]. IXC and Filter dimensions and lifting weights are provided in Appendixes 6.7 and 6.8, respectively [Project TD101].

b) The Transport Vehicle will be stored outside the IXC Storage Pad or Transfer Path when not in use [Project Requirement].

c) A fire suppression system shall be installed on the IXC fork truck in accordance with Preliminary Fire Hazard Analysis recommendation 3 found in Appendix 6.4.

d) Factory Mutual approved non-flammable hydraulic fluid shall be used on fork truck in accordance with Preliminary Fire Hazard Analysis recommendation 6 found in Appendix 6.4.

e) A height limiting feature on the fork truck shall be installed to limit IXC lift height to less than 3 ft. in accordance with Appendix 6.5, TSCR IXC Concrete Storage Pad System Safety Significant Design Parameters (see PE.10.). This is the only safety significant component on the fork truck assembly.

### 3.4.9 Utilities and Infrastructure

#### 3.4.9.1 Water

a) TSCR IXC Concrete Storage Pad System shall interface, if required, with MSA Hanford Site Operations Infrastructure Services, Water Utilities Distribution System [TOC Contract – J3 Table].

b) The raw water systems, if required, shall meet the requirements specified in Washington State Department of Health (WSDOH) 331-123, *Water System Design Manual*. Cross connection control features shall prevent cross-connection of raw and potable water systems.

c) The installation of the raw water system, if necessary, shall be in accordance with Hanford Water Utility Standards [HNF-4493, *Interface Control Document between Washington River Protection Solutions, LLC (WRPS) and Mission Support Alliance, LLC (MSA) the Water Utilities Distribution System* Manager].

d) Thrust restraint shall be provided as required in accordance with NFPA 24, *Standard for the Installation of Private Service Mains and Their Appurtenances*.

e) The fire water supply, if necessary, shall be capable of providing the minimum fire flow of 3500 gpm at 20 psig for a minimum duration of four hours (hrs) in accordance with the Hanford Fire Marshal's Office Interpretation/Clarification Request (ICR) 2017-02, *Hanford Fire Water Supply Evaluation*.

#### 3.4.9.2 Service and Instrument Air Requirements

Not applicable to the TSCR IXC Concrete Storage Pad System.

#### 3.4.9.3 Electrical Requirements

a) TSCR IXC Concrete Storage Pad System shall interface, if required, with MSA Hanford Site Operations Infrastructure Services, Electrical Utilities Distribution System [TOC Contract – J3 Table].

b) Design shall utilize existing facility 480-volt power available at power panel located at 255-AP building for necessary electrical loads. [Project Requirement]

c) Electrical systems shall be designed in compliance with the requirements of the NFPA 70, *National Electrical Code*®, NFPA 101, *Life Safety Code*® and TFC-ENG-STD-41, "Electrical Installations."

d) Power requirements for safe condition shall be determined through an analysis in compliance with HNF-4492, *Interface Control Document between Washington River Protection Solutions, LLC and Mission Support Alliance, LLC for Electric Utilities Distribution System*.

e) Electrical raceways and flexible cords and cable shall be designed in compliance with the requirements of TFC-ENG-STD-15, "Standard for Raceway Systems and Flexible Cords & Cables."

f) All electrical equipment used in the design shall be listed, or labeled, by a Nationally Recognized Testing Laboratory (NRTL) such as Underwriters Laboratory, Inc. (UL) [TFC-ENG-STD-41, "Electrical installations"].

g) The TSCR IXC Concrete Storage Pad System shall not interfere with energized overhead power lines. Crane approach distances (minimum required clearances) to energized overhead lines shall be in accordance with 29 CRF 1926.1408, *Power line safety (up to 350 kV) – equipment operations*, Appendix A: "Limited Approach Boundaries for Overhead Lines" for 13.8 kV lines.

#### 3.4.9.4 Heating, Ventilation, and Air-Conditioning (HVAC) Requirements

Not applicable to the TSCR IXC Concrete Storage Pad System.

#### 3.4.9.5 Infrastructure

Access roads, aprons, and walkways for the TSCR IXC Concrete Storage Pad System site shall be integrated into the existing infrastructure wherever possible [Operational Requirement].

## 3.5 OTHER REQUIREMENTS

### 3.5.1 Welding Requirements

a) Structural steel welding and welder qualification shall meet the requirements of ASME Boiler & Pressure Vessel Code (B&PVC), Section IX and American Welding Society (AWS) D1.1/D1.1M, *Structural Welding Code – Steel*; reinforcing structural steel welding shall comply with AWS D1.4/D1.4M *Structural Welding Code – Reinforcing Steel* and stainless steel welding shall comply with AWS D1.6/D1.6M *Structural Welding Code – Stainless Steel.*

b) In-process inspection may not be used in-lieu of other nondestructive examination (NDE) for welds [Welding Engineering Discipline Lead Requirement].

### 3.5.2 Hoisting and Rigging Requirements

All hoisting and rigging equipment shall comply with the requirements of DOE/RL 92-36, *Hanford Site Hoisting and Rigging Manual*, TFC-ENG-FACSUP-C-25, Hoisting and Rigging; RPP-8360, *Lifting Attachment and Lifted Item Evaluation.*

### 3.5.3 Transportability

a) All components, unless specified otherwise in this section or related sections, shall be compatible with being transported by public roadway to contract specified destination. Items shall either be self- supporting or provided with packing and dunnage to ensure their stability and protection from damage [Good Engineering Practice].

b) The transport of the TSCR IXC shall be in accordance with RPP-8360, *Lifting Attachment and Lifted Item Evaluation.*

### 3.5.4 Quality Assurance

a) The Contractor shall have a documented and implemented Quality Assurance (QA) Program that meets the DOE O 414.1D, *Quality Assurance* requirements that are passed down via Statements of Work.

b) The Contractor shall flow down and be responsible for the implementation of QA requirements to its sub-tier Suppliers [TFC-PLN-02, “Quality Assurance Program Description”].

### 3.5.5 Nameplates and Product Marking

Labeling of electrical equipment shall be in accordance with TFC-ENG-STD-41, "Electrical Installations."

### 3.5.6 Decontamination and Decommissioning

TSCR IXC Concrete Storage Pad System shall consider design features which simplify decontamination and facilitate decommissioning at its end-of-life in compliance with the requirements of DOE O 420.1C, Attachment 2, Chapter I, *Nuclear Safety Design Criteria* [3b (3) and (4)].

### 3.5.7 Maintenance Requirements

TSCR IXC Concrete Storage Pad System shall be designed so that corrective and preventative maintenance can be performed by Hanford Site Crafts personnel unless special circumstances require specific vendor maintenance support [TOC Contract – J.3 Table].

### 3.5.8 Drawing requirements

Drawings shall be in accordance with TFC-ENG-STD-10, "Drawing Standard."

### 3.5.9 Civil Surveys

Civil surveys shall be done in accordance with TFC-ENG-STD-39, "Civil Survey for Tank Farm Facilities."

# 4.0 DESIGN VERIFICATION

a) WRPS will review and approve the Design Agent's design of TSCR IXC Concrete Storage Pad System in accordance with TFC-ENG-DESIGN-C-55, "Design Subcontract Deliverable Review."

b) TSCR IXC Concrete Storage Pad System design utilizing WRPS developed multiple use spreadsheets shall be in compliance with the requirements of TFC-ENG-DESIGN-C-32, "Utility Calculation Software Management Plan." Single use spreadsheets shall be developed and verified in compliance with TFC-ENG-DESIGN-C-10, "Engineering Calculations."

c) TSCR IXC Concrete Storage Pad System shall perform design reviews on the design agent generated design media in accordance with TFC-ENG-DESIGN-C-52, "Technical Reviews" and TFC-ESHQ-RP_ADM-C-26, "Radiological Design Review Process." Design verification will be performed in accordance with TFC-ENG-ENG-P-17, "Design Verification."

# 5.0 REFERENCES

200E-2018-0016 (2018), *LAWPS, TSCR, and Interim Storage Pad Facilities*, Washington River Protection Solutions, LLC, Richland, Washington.

RPP-51303, *River Protection Project Functions and Requirements*, Rev. 0, Washington River Protections Solutions, LLC. Richland, Washington.

RPP-SPEC-62088, *Project TD101 Tank Side Cesium Removal Technology Demonstration System Specification*, Rev. 0, Washington River Protections Solutions, LLC. Richland, Washington.

TFC-ENG-DESIGN-C-01, "Development of System and Subsystem Specifications" Rev. C, Washington River Protections Solutions, LLC. Richland, Washington.

# 6.0 APPENDICES

## 6.1 SYSTEM REQUIREMENTS MATRIX

The System Requirements Matrix is a tabular compilation of the requirements contained in this specification, including the specification section number and complete requirement text. The table also identifies the requirement pedigree, including the applicable requirement source document. A remarks column captures any pertinent information relative to the implementation of the requirement.

**Table 6-1. System Requirements Matrix**

| Requirement ID | Requirement Text | Source Document(s) |
|---|---|---|
| 3.1.1 | The technical integration of the TSCR IXC Concrete Storage Pad System and the TSCR Project is critical as each Project has different Design Agents. To insure proper integration, interfacing requirements are documented in RPP-RPT-60603, *Interface Management Agreement between TF Upgrades Project (Project #T1P190) and the Tank Side Cesium Demonstration Project (Project #TD101)*. | RPP-RPT-60603 |
| 3.1.2 | The TSCR IXC Concrete Storage Pad System design may require an interface with existing Hanford Site utilities and infrastructure as needed to support construction, column transfer operations, and interim storage operations. | TOC Contract – J.3 Table |
| 3.1.3 | TSCR IXC Concrete Storage Pad System Security and Property Protection other than that specified below shall be determined based on security assessments, hazards analysis, safety analysis, and subsystem quality level designations. | Project Requirement |
| 3.2 | The River Protection Project (RPP) Functional Hierarchy is described in RPP-51303, *River Protection Project Functions and Requirements.*<br>RPP mission functions and subordinate performance functions applicable to the TSCR IXC Concrete Storage Pad System are defined in RPP-SPEC-62049, *Tank Farm System Infrastructure Upgrades Specification – Code of Record* | RPP-51303<br>RPP-SPEC-62054 |
| 3.2.1.1.a | The TSCR IXC Concrete Storage Pad System shall provide removal, movement, and placement of spent, cesium loaded IXCs from the TSCR Process Enclosure to the interim storage pad. | Project Requirement |
| 3.2.1.1.b | Radioactive waste shall be managed in accordance with the applicable requirements in DOE O 435.1, *Radioactive Waste management* and DOE M 435.1-1, *Radioactive Waste Management Manual.* | DOE O 435.1<br>DOE M 435.1-1 |
| 3.3.1.a | The TSCR IXC Concrete Storage Pad System design shall protect personnel safety in accordance with 10 CFR 835, *Occupational Radiation Protection.* | 10 CFR 835 |
| 3.3.1.b | The TSCR IXC Concrete Storage Pad System shall protect the public and the environment against unwarranted risk from radiation related to radiological activities in accordance with DOE O 458.1, *Radiation Protection of the Public and the Environment.* | DOE O 458.1 |
| 3.3.1.c | Outside areas used for pedestrian or vehicle traffic directly adjacent to the TSCR IXC Storage Pad and BOF Pad shall limit the dose rate at the fence or wall line to less than or equal to 0.8 mrem/hr in accordance with TFC-ESHQ-RP_MON-C-18, Radiological Posting. | TFC-ESHQ-RP_MON-C-18 |
| 3.3.1.d | Areas outside the TSCR fence line that are expected to be continuously occupied (individual occupancy of 2,000 hours per year), such as the TSCR Control Enclosure, shall have dose rates limited to less than 0.05 mrem/hr in accordance with TFC-ESHQ-RP_MON-C-18, Radiological Posting. | TFC-ESHQ-RP_MON-C-18 |
| 3.3.2.a | The design shall include features that protect personnel safety, incorporate engineering controls, and minimize the reliance on the use of personnel protective equipment during routine functions, thus improving system ergonomics. | TFC-ENG-STD-01 |
| 3.3.2.b | The design shall include adequate space to accommodate steering of the Transport Vehicle to access the TSCR Process Enclosure located on the BOF Pad, have adequate room to maneuver (e.g. back up, turn around, etc.), move along the Transfer Path, enter the IXC Storage Pad and place or remove a spent TSCR IXC. | Project Requirement |
| 3.3.2.c | The design shall include accommodation for ground personnel who support the removal, transport and placement of the TSCR IXCs. | TFC-ENG-STD-01 |
| 3.3.2.d | The TSCR IXC Concrete Storage Pad System design shall protect personnel safety in accordance with 10 CFR 850, *Chronic Beryllium Disease Prevention Program* and DOE-0342, *Hanford Site Chronic Beryllium Disease Prevention Program (CBDPP).* | 10 CFR 850<br>DOE-0342 |
| 3.3.3.a | The TSCR IXC Concrete Storage Pad System shall be designed to the applicable natural environmental conditions specified in DOE O 420.1C *Facility Safety,* Attachment 2, Chapter IV, Natural Phenomena Hazards Mitigation; DOE-STD-1020, *Natural Phenomena Hazards Analysis and Design Criteria for DOE Facilities;* HNF-SD-GN-ER-501, Natural Phenomena Hazards, Hanford Site, Washington; TFC-ENG-STD-02, "Environmental/Seasonal Requirements for TOC Systems, Structures, and Components (SSCs);" and TFC-ENG-STD-06, "Design Loads for Tank Farm Facilities." | DOE O 420.1C, Chapter IV<br>DOE-STD-1020<br>HNF-SD-GN-ER-501<br>TFC-ENG-STD-02<br>TFC-ENG-STD-06 |
| 3.3.3.b | The design shall identify and protect under and over crossings of utilities. | Operational Requirement |
| 3.3.3.c | The IXC Storage Pad and BOF Pad shall slope to drain and remove liquid resulting from precipitation in accordance with WAC 173-303-630(7)(c)(i), *Use and management of containers* – Containment. | WAC 173-303-630(7)(c)(i) |
| 3.3.3.d | The IXC Storage Pad and the BOF Pad design shall prevent unknowing entry and minimize the possibility of unauthorized entry in accordance 40 CFR 264.14, *Standards for Owners and Operators of Hazardous Waste Treatment, Storage, and Disposal Facilities*- Security. | 40 CFR 264.14 |

| | | |
|---|---|---|
| 3.3.3.e | The spent TSCR IXC arrangement shall consist of rows that are a maximum of two IXCs wide and any two rows of IXCs having at least a 30-inch separation in accordance with WAC 173-303-630(5)(c), *Use and management of containers* – Management of containers. | WAC 173-303-630(5)(c) |
| 3.4.1.a | The design life of the BOF Pad, Transfer Path and IXC Storage Pad shall be for a minimum of 50 years to be consistent with the TSCR Demonstration Project [Project TD101] IXC design life. | Project Requirement |
| 3.4.1.b | The TSCR IXC Concrete Storage Pad System shall be permanently installed system and the basis of design is DOE-STD-1020, *Natural Phenomenon Hazards Analysis and Design Criteria for Department of Energy Facilities* and the International Building Code (IBC). | DOE-STD-1020<br>IBC |
| 3.4.1.c | The TSCR IXC Concrete Storage Pad System shall be designed in accordance with 40 CFR 264.31, *Standards for Owners and Operators of Hazardous Waste Treatment, Storage, and Disposal Facilities*- Design and operation of facility. | 40 CFR 264.31 |
| 3.4.1.d | The BOF Pad that directly supports the Process Enclosure and Vehicle Barrier Wall shall be considered safety significant with the remaining portions of the BOF Pad (e.g., Ancillary Enclosure, Control Enclosure, Emergency Shower, etc.) and Transfer Path considered general service in accordance with Appendix 6.5, TSCR Concrete Storage Pad System Safety Significant Design Parameters[3](see PE.8. and PE.9.).<br><br>[3] A demarcation is required for any general service pad adjacent to a safety significant pad. | RPP-SPEC-62054, Appendix 6.5 |
| 3.4.1.e | TSCR IXC Concrete Storage Pad System shall comply with the requirements of TFC-ENG-STD-01, "Human Factors in Design." | TFC-ENG-STD-01 |
| 3.4.1.f | The TSCR IXC Concrete Storage Pad System shall be designed for maintenance and operations in compliance with the requirements of TFC-PLN-29, "Nuclear Maintenance Management Program." | TFC-PLN-29 |
| 3.4.2.a | The TSCR IXC Concrete Storage Pad System (See Figure 1-1) will reside east of the AP Tank Farm, see Figure 1-1. The BOF Pad will encompass the TSCR Project, the Transfer Path will extend east from the BOF Pad, over 4th Street Loop, and to the IXC Storage Pad. This area has been approved per site evaluation 200E-2018-0016, *LAWPS, TSCR, and Interim Storage Pad Facilities*. | 200E-2018-0016 |
| 3.4.2.b | Design of the TSCR IXC Concrete Pad Storage System shall use the Utility Scan Summary Sheet and Topographical Survey data found in Appendix 6.2 and Appendix 6.3, respectively. | RPP-SPEC-62054, Appendix 6.2<br>RPP-SPEC-62054, Appendix 6.3 |
| 3.4.2.c | The grade of the BOF Pad, Transfer Path and the IXC Storage Pad shall be such that no ramp is needed between any two entities. | Project Requirement |
| 3.4.2.d | General through traffic along 4th Street and across the transfer path, will remain open unless a temporary road closure is required (e.g., IXC unloading/loading, IXC transfer between BOF and IXC Storage Pad, etc.) | Project Requirement |
| 3.4.2.e | Vehicle barriers shall be located between loaded IXCs and vehicle traffic capable of resulting in a high-energy impact with any of the loaded IXCs inside the Process Enclosure or on the Spent IXC Storage Pad. Vehicle barriers shall also be of sufficient shape, dimensions, and mass to reduce the speed of a 6,000-lb vehicle from 25 mph to less than 10 mph in a direct (i.e., perpendicular) impact scenario in accordance with Appendix 6.5, TSCR Concrete Storage Pad System Safety Significant Design Parameters (see PE.9.). | RPP-SPEC-62054, Appendix 6.5 |
| 3.4.2.1.a | The BOF Pad, Transfer Path, and IXC Storage Pad design shall satisfy consensus standard requirements and be sufficiently designed to satisfy stress, serviceability, displacement and functional requirements including American Concrete Institute (ACI) 301, *Specification for Structural Concrete;* ACI 318, *Building Code Requirements for Structural Concrete and Commentary*; American Institute of Steel Construction (AISC) 325, *Steel Construction Manual – 14th Edition,* and AISC 360, *Specification for Structural Steel Buildings*; and TM5-809-12, *Technical Manual – Concrete Floor Slabs on Grade Subjected to Heavy Loads,* and the guidance provided in ACI 302.1R, *Guide to Concrete Floor and Slab Construction.* | ACI 301<br>ACI 318<br>AISC 325<br>AISC 360<br>TM5-809-12<br>ACI 302.1R |
| 3.4.2.1.b | Constructability shall be considered in the design process. | Good Engineering Practice |
| 3.4.2.2.a | The TSCR IXC Concrete Storage Pad System shall be designed in accordance with NPH requirements provided in TFC-ENG-STD-06, "Design Loads for Tank Farm Facilities" and the applicable seismic design criteria and limit states given in Appendix 6.5, TSCR IXC Concrete Storage Pad System Safety Significant Design Parameters. NPH Design Category shall be uniformly applied as shown in Table 3-2. | TFC-ENG-STD-06<br>RPP-SPEC-62054, Appendix 6.5 |
| 3.4.2.2.b | For Geotechnical Soil Parameters[4], RPP-RPT-61401: *LAWPS System South & East of AP Tank Farm Geotechnical Engineering Report (Rev.0)* shall be used.<br><br>[4] The site subsurface conditions of the TSCR IXC Concrete Storage Pad System correspond with Site Class C. [WRPS Contract No. 65668-000, *LAWPS System South & East of AP Tank Farm Geotechnical Engineering Report (Rev.0)*]. | RPP-RPT-61401 |
| 3.4.2.2.c | For seismic design parameters, Tank Farm Standards TFC-ENG-STD-06, "Design Loads for Tank Farm Facilities" shall be used. Where soil properties are known in sufficient detail to determine a site class other than C, the Design Special Accelerations, $S_{DS}$ and $S_{D1}$, shall be adjusted by the appropriate Site | TFC-ENG-STD-06<br>ASCE 7-10 |

| | | |
|---|---|---|
| | Coefficients, $F_a$ and $F_v$, listed in Tables 11.4-1 and 11.4-2 in American Society of Civil Engineers (ASCE) 7-10, *Minimum Design Loads for Buildings and Other Structures.* | |
| 3.4.3.a | The TSCR IXC Concrete Storage Pad System design shall incorporate the applicable requirements of DOE O 420.1C *Facility Safety,* Attachment 2, Chapter II, *Fire Protection.* | DOE O 420.1C, Chapter II |
| 3.4.3.b | A fire hazard analysis for the TSCR Concrete Storage Pad System shall be performed in accordance with DOE-STD-1066, *Fire Protection* as implemented by TFC-ESHQ-FP-STD-06, 'Fire Safety Analysis and Fire Protections Assessment Requirements." As a result of this assessment, additional requirements may be added to this specification. | DOE-STD-1066<br>TFC-ESHQ-FP-STD-06 |
| 3.4.3.c | Raw water is required for the TSCR IXC Concrete Storage Pad System to supply fire water to fire hydrants. The applicable requirements DOE-STD-1066*, Fire Protection* shall be followed for fire suppression (sprinklers and/or hydrants) water supplies. | DOE-STD-1066 |
| 3.4.3.d | Fire protection design shall be in accordance with TFC-ESHQ-FP-STD-02, "Fire Protection Design Criteria". | TFC-ESHQ-FP-STD-02 |
| 3.4.4.a | The BOF and IXC Storage Pads shall have perimeter fencing. The fence requirements are expected to be similar to those found in existing Tank Farm Facilities [Project Requirement]. Concrete wall(s) shall be used on the BOF Pad, in lieu of security fencing, when required to serve multiple purposes such as physical security, dose protection and vehicle barrier. | Project Requirement |
| 3.4.4.b | The fence design will include Controlled Access Points, to include fork truck enter/exits and personnel gates. | Project Requirement |
| 3.4.4.c | Gate crash-out hardware shall be considered for the Controlled Access Points in accordance with NFPA 101, *Life Safety Code*. | NFPA 101 |
| 3.4.4.d | The BOF and IXC Storage Pad shall have an average of 3 ft-candles illumination along the fence line in accordance with the requirements in TFC-ESHQ-IH-STD-13, "Illumination". | TFC-ESHQ-IH-STD-13 |
| 3.4.5.a | The IXC Transfer Path shall be concrete. | Project Requirement |
| 3.4.5.b | The Transfer Path shall be designed to accommodate the Transport Vehicle carrying an IXC [Project Requirement]. IXC dimensions and lifting weight are provided in Appendix 6.7, IXC General Arrangement [Project TD101]. | Project Requirement<br>RPP-SPEC-62054, Appendix 6.7 |
| 3.4.5.c | The Transfer Path shall be designed to accommodate emergency service vehicles and crane lifting a TSCR IXC. | Operational Requirement |
| 3.4.6.a | The design of the BOF and IXC Storage Pads shall incorporate the applicable lifting, transportation (e.g., Transport Vehicle), and storage of high level waste in accordance with DOE M 435.1-1, chg. 1, *Radioactive Waste Management Manual*. | DOE M 435.1-1, chg. 1 |
| 3.4.6.b | The IXC Storage Pad shall have discretely placed steel embed plates flush with the top surface to secure the TSCR Anchoring Base (see Appendix 6.6) [Project TD101]. The intent is to have bolted connections between the TSCR Anchoring Base and steel embed plates [Engineering Requirement]. | Engineering Requirement<br>RPP-SPEC-62054, Appendix 6.6 |
| 3.4.6.c | Anchor loads and detailed drawings of the TSCR Anchoring Base (see Appendix 6.6) will be supplied by TSCR Demonstration Project [Project TD101] [Engineering Requirement]. | Engineering Requirement<br>RPP-SPEC-62054, Appendix 6.6 |
| 3.4.6.d | The BOF Pad design shall support an Emergency Shower, Security/Dose Protection/Vehicle Barrier Wall, and the following TSCR Demonstration Project [Project TD101] equipment: Process Enclosure, Ancillary Enclosure, Control Enclosure, Ventilation Blower Skid, and Electrical Transformer. The BOF Pad shall also provide a staging area for three IXCs and space for the Transport Vehicle to maneuver with a TSCR IXC attached, see Figure 1-1. Equipment loads will be determined by the Tank Farm Upgrades Project [Project T1P190]. | Engineering Requirement |
| 3.4.6.e | The BOF and IXC Storage Pad design cannot damage (e.g., puncture) the IXCs provided by the TSCR Demonstration Project [Project TD101] in a tip over event, breaching the safety function of the IXC. This can be achieved by eliminating protrusions in the pad design. | Nuclear Safety Requirement |
| 3.4.6.f | The BOF and IXC Storage Pads shall be designed to accommodate the Transport Vehicle carrying an IXC [Project Requirement]. IXC dimensions and lifting weight are provided in Appendix 6.7, IXC General Arrangement [Project TD101]. | Project Requirement<br>RPP-SPEC-62054, Appendix 6.7 |
| 3.4.6.g | The BOF Pad shall slope a minimum of 1% to minimize the risk of a fork truck fuel spill and fire encroaching on the TSCR Process Enclosure in accordance with Preliminary Fire Hazard Analysis recommendation 7 found in Appendix 6.4. For the area directly under the TSCR Process Enclosure, the pad shall be level (no slope) in the north/south direction and slope downward 0.5%, from east to west, to ensure adequate drainage of accumulated liquid to Process Enclosure floor sump [Project TD101 Requirement]. Standard concrete finishes and tolerances shall apply. | RPP-SPEC-62054, Appendix 6.4<br>Project Requirement |
| 3.4.7.a | Allocated space for the IXC Storage Pad is 95 ft wide (east-west) and 177 ft long (north-south). The final pad sizing shall be adjusted to optimize the space while ensuring all requirements are met [Engineering Requirement]. | Engineering Requirement |
| 3.4.7.b | The IXC Storage Pad will be designed to hold a minimum of 150 spent TSCR IXCs. TSCR Anchoring Base and IXC dimensions and weights are defined in Appendixes 6.6 and 6.7, respectively [Project TD101]. | RPP-SPEC-62054, Appendixes 6.6 and 6.7 |

| | | |
|---|---|---|
| 3.4.8.a | The Transport Vehicle with integrated lifting yoke shall be capable of independently handling an IXC and filter throughout the TSCR IXC Concrete Storage Pad System [Project Requirement]. IXC and Filter dimensions and lifting weights are provided in Appendixes 6.7 and 6.8, respectively [Project TD101]. | Project Requirement<br>RPP-SPEC-62054, Appendixes 6.7 and 6.8 |
| 3.4.8.b | The Transport Vehicle will be stored outside the IXC Storage Pad or Transfer Path when not in use [Project Requirement]. | Project Requirement |
| 3.4.8.c | A fire suppression system shall be installed on the IXC fork truck in accordance with Preliminary Fire Hazard Analysis recommendation 3 found in Appendix 6.4. | RPP-SPEC-62054, Appendix 6.4 |
| 3.4.8.d | Factory Mutual approved non-flammable hydraulic fluid shall be used on fork truck in accordance with Preliminary Fire Hazard Analysis recommendation 6 found in Appendix 6.4. | RPP-SPEC-62054, Appendix 6.4 |
| 3.4.8.e | A height limiting feature on the fork truck shall be installed to limit IXC lift height to less than 3 ft. in accordance with Appendix 6.5, TSCR IXC Concrete Storage Pad System Safety Significant Design Parameters (see PE.10.). This is the only safety significant component on the fork truck assembly. | RPP-SPEC-62054, Appendix 6.5 |
| 3.4.9.1.a | TSCR IXC Concrete Storage Pad System shall interface, if required, with Mission Support Alliance (MSA) Hanford Site Operations Infrastructure Services, Water Utilities Distribution System. | TOC Contract – J3 Table |
| 3.4.9.1.b | The raw water systems, if required, shall meet the requirements specified in Washington State Department of Health (WSDOH) 331-123, *Water System Design Manual*. Cross connection control features shall prevent cross-connection of raw and potable water systems. | WSDOH 331-123 |
| 3.4.9.1.c | The installation of the raw water system, if necessary, shall be in accordance with Hanford Water Utility Standards. | HNF-4493 |
| 3.4.9.1.d | Thrust restraint shall be provided as required in accordance with NFPA 24, *Standard for the Installation of Private Service Mains and Their Appurtenances*. | NFPA 24 |
| 3.4.9.1.e | The fire water supply, if necessary, shall be capable of providing the minimum fire flow of 3500 gpm at 20 psi for a minimum duration of four hours in accordance with the Hanford Fire Marshal's Office Interpretation/Clarification Request (ICR) 2017-02, *Hanford Fire Water Supply Evaluation.* | ICR 2017-02 |
| 3.4.9.2 | Not applicable to the TSCR IXC Concrete Storage Pad System. | Not Applicable |
| 3.4.9.3.a | TSCR IXC Concrete Storage Pad System shall interface, if required, with Mission Support Alliance (MSA) Hanford Site Operations Infrastructure Services, Electrical Utilities Distribution System. | TOC Contract – J3 Table |
| 3.4.9.3.b | Design shall utilize existing facility 480-volt power available at power panel located at 255-AP building for necessary electrical loads. | Project Requirement |
| 3.4.9.3.c | Electrical systems shall be designed in compliance with the requirements of the NFPA 70, *National Electrical Code*®, NFPA 101, *Life Safety Code*® and TFC-ENG-STD-41, "Electrical Installations." | NFPA 70<br>NFPA 101<br>TFC-ENG-STD-41 |
| 3.4.9.3.d | Power requirements for safe condition shall be determined through an analysis in compliance with HNF-4492, *Interface Control Document between Washington River Protection Solutions, LLC and Mission Support Alliance, LLC for Electric Utilities Distribution System.* | HNF-4492 |
| 3.4.9.3.e | Electrical raceways and flexible cords and cable shall be designed in compliance with the requirements of TFC-ENG-STD-15, "Standard for Raceway Systems and Flexible Cords & Cables." | TFC-ENG-STD-15 |
| 3.4.9.3.f | All electrical equipment used in the design shall be listed, or labeled, by a Nationally Recognized Testing Laboratory (NRTL) such as Underwriters Laboratory, Inc. (UL). | TFC-ENG-STD-41 |
| 3.4.9.3.g | The TSCR IXC Concrete Storage Pad System shall not interfere with energized overhead power lines. Crane approach distances (minimum required clearances) to energized overhead lines shall be in accordance with 29 CRF 1926.1408, *Power line safety (up to 350 kV) – equipment operations*, Appendix A: "Limited Approach Boundaries for Overhead Lines" for 13.8 kV lines. | 29 CRF 1926.1408, Appendix A |
| 3.4.9.4 | Not applicable to the TSCR IXC Concrete Storage Pad System. | Not Applicable |
| 3.4.9.5 | Access roads, aprons, and walkways for the TSCR IXC Concrete Storage Pad System site shall be integrated into the existing infrastructure wherever possible. | Operational Requirement |
| 3.5.1.a | Structural steel welding and welder qualification shall meet the requirements of ASME Boiler & Pressure Vessel Code (B&PVC), Section IX and American Welding Society (AWS) D1.1/D1.1M, *Structural Welding Code – Steel*; reinforcing structural steel welding shall comply with AWS D1.4/D1.4M *Structural Welding Code – Reinforcing Steel* and stainless steel welding shall comply with AWS D1.6/D1.6M *Structural Welding Code – Stainless Steel.* | B&PVC, Section IX<br>AWS D1.1/D1.1M<br>AWS D1.4/D1.4M<br>AWS D1.6/D1.6M |
| 3.5.1.b | In-process inspection may not be used in-lieu of other nondestructive examination (NDE) for welds [Welding Engineering Discipline Lead Requirement]. | Welding Engineering Discipline Lead Requirement |
| 3.5.2 | All hoisting and rigging equipment shall comply with the requirements of DOE/RL 92-36, *Hanford Site Hoisting and Rigging Manual*, TFC-ENG-FACSUP-C-25, Hoisting and Rigging; RPP-8360, *Lifting Attachment and Lifted Item Evaluation.* | DOE/RL 92-36<br>TFC-ENG-FACSUP-C-25<br>RPP-8360 |

| | | |
|---|---|---|
| 3.5.3.a | All components, unless specified otherwise in this section or related sections, shall be compatible with being transported by public roadway to contract specified destination. Items shall either be self- supporting or provided with packing and dunnage to ensure their stability and protection from damage. | Good Engineering Practice |
| 3.5.3.b | The transport of the TSCR IXC shall be in accordance with RPP-8360, *Lifting Attachment and Lifted Item Evaluation.* | RPP-8360 |
| 3.5.4.a | The Contractor shall have a documented and implemented Quality Assurance (QA) Program that meets the DOE O 414.1D, *Quality Assurance* requirements that are passed down via Statements of Work. | DOE O 414.1D |
| 3.5.4.b | The Contractor shall flow down and be responsible for the implementation of QA requirements to its sub-tier Suppliers. | TFC-PLN-02 |
| 3.5.5 | Labeling of electrical equipment shall be in accordance with TFC-ENG-STD-41, "Electrical Installations." | TFC-ENG-STD-41 |
| 3.5.6 | TSCR IXC Concrete Storage Pad System shall consider design features which simplify decontamination and facilitate decommissioning at its end-of-life in compliance with the requirements of DOE O 420.1C, Attachment 2, Chapter I, *Nuclear Safety Design Criteria* [3b (3) and (4)]. | DOE O 420.1C, Chapter I [3b(3) and 4] |
| 3.5.78 | TSCR IXC Concrete Storage Pad System shall be designed so that corrective and preventative maintenance can be performed by Hanford Site Crafts personnel unless special circumstances require specific vendor maintenance support. | TOC Contract – J.3 Table |
| 3.5.8 | Drawings shall be in accordance with TFC-ENG-STD-10, "Drawing Standard." | TFC-ENG-STD-10 |
| 3.5.9 | Civil surveys shall be in accordance with TFC-ENG-STD-39, "Civil Survey for Tank Farm Facilities." | TFC-ENG-STD-39 |
| 4.0.a | WRPS will review and approve the Design Agent's design of TSCR IXC Concrete Storage Pad System in accordance with TFC-ENG-DESIGN-C-55, "Design Subcontract Deliverable Review." | TFC-ENG-DESIGN-C-55 |
| 4.0.b | TSCR IXC Concrete Storage Pad System design utilizing WRPS developed multiple use spreadsheets shall be in compliance with the requirements of TFC-ENG-DESIGN-C-32, "Utility Calculation Software Management Plan." Single use spreadsheets shall be developed and verified in compliance with TFC-ENG-DESIGN-C-10, "Engineering Calculations." | TFC-ENG-DESIGN-C-32<br>TFC- ENG-DESIGN-C-10 |
| 4.0.c | TSCR IXC Concrete Storage Pad System shall perform design reviews on the design agent generated design media in accordance with TFC-ENG-DESIGN-C-52, "Technical Reviews" and TFC-ESHQ-RP_ADM-C-26, "Radiological Design Review Process." Design verification will be performed in accordance with TFC-ENG-ENG-P-17, "Design Verification." | TFC-ENG-DESIGN-C-52<br>TFC-ESHQ-RP_ADM-C-26<br>TFC-ENG-ENG-P-17 |

## 6.2 UTILITY SCAN SUMMARY SHEET

| Utility Scan Summary Sheet | |
|---|---|
| **Site** | LAWPS |
| **Date** | 02/23 – 02/27 |
| **Approximate size** | 800 x 400 feet |
| **Terrain** | Flat |
| **Vegetation/ground cover** | Gravel & sand |
| **Weather** | Clear |
| **Limitations/obstacles** | Trailers & cars |
| **Equipment** | |
| **Ground Penetrating Radar (GPR)** | Geophysical Survey Systems, Inc., SIR3000 control units with 400 MHz antennas |
| **Electromagnetic Induction** | Geonics EM61MK2 with Allegro CX |
| **Utility Locator** | RadioDetection RD8100 receiver and T10 transmitter |
| **Contact** | |
| Mark Villa | Geophysical Survey LLC 509.222-0933 |
| **Data Collection and Processing Parameters** | |
| **GPR** | GPR data were collected at 15 scans per foot with a 50 nanosecond window, gains and filters set in the field to match soil conditions. Depth of investigation is 8 feet. |
| **Electromagnetic Induction** | EM data collected across accessible areas (areas without vehicles/buildings/laydown areas) on transects spaced approximately 6 feet apart. EM data collected at 5 readings per second with three time gates and top coil (differential mode). |
| **Utility Locator** | Passive radio frequency & 60 Hz search conducted across survey areas. Active radio frequency exposed conduits and passive targets via induction or conduction with T10 transmitter, radio frequency was traced with RD8100 receiver. |
| **Results** | |
| **Utility mark-outs and Mapping** | Located utilities were painted in the field. A Trimble Pro6H was used to map marked utilities. Data is provided in NAD83 Washington South US Feet coordinates.<br><br>200-E-127-PL-B : The line terminates in the gravel parking lot east of AP Farm. The is no indication in GPR or EM data of a headwall at the end of the pipeline. |

GEOPHYSICAL SURVEY LLC

FIGURE 1
SITE MAP
LAWPS
Hanford, WA

Legend
GEOPHYSICAL SURVEY LLC
FIGURE 2
UTILITY MAP
LAWPS
Hanford, WA

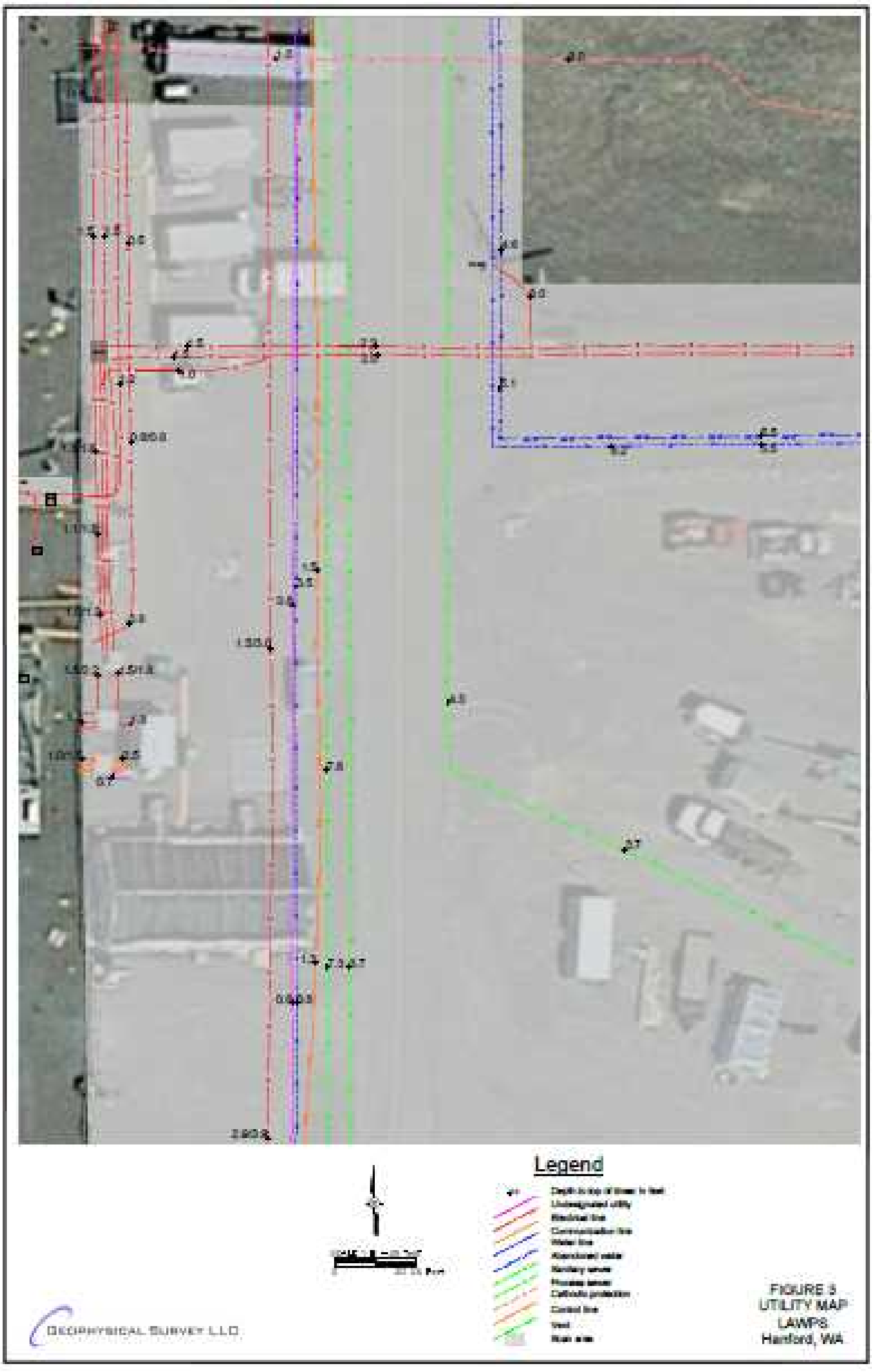
Legend
GEOPHYSICAL SURVEY LLC
FIGURE 3
UTILITY MAP
LAWPS
Hanford, WA

Legend
GEOPHYSICAL SURVEY LLC
FIGURE 4
UTILITY MAP
LAWPS
Hanford, WA

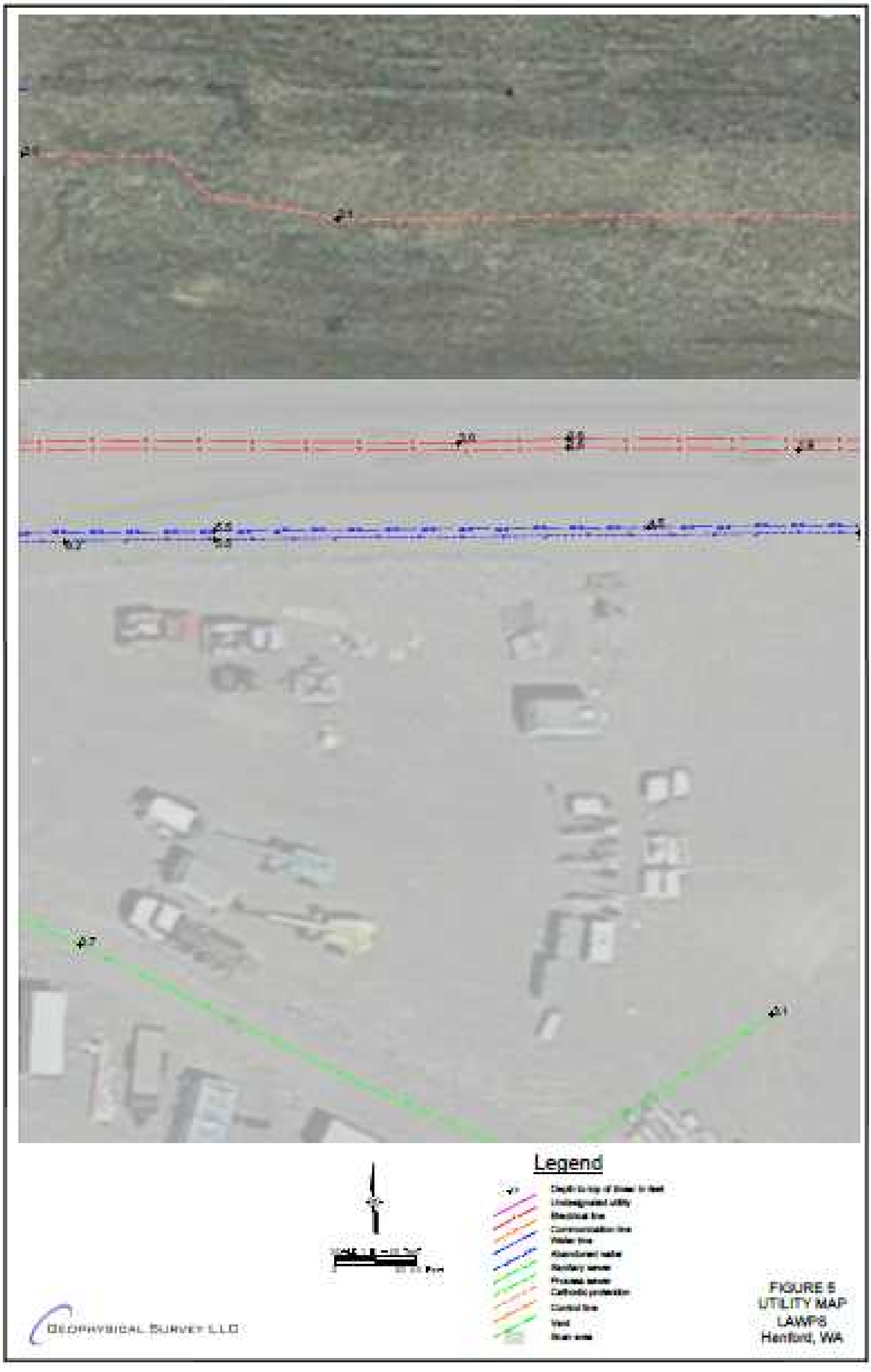
Legend
GEOPHYSICAL SURVEY LLC
FIGURE 5
UTILITY MAP
LAWPS
Hanford, WA

Legend
GEOPHYSICAL SURVEY LLC
FIGURE 6
UTILITY MAP
LAWPS
Hanford, WA

Legend
GEOPHYSICAL SURVEY LLC
FIGURE 7
UTILITY MAP
LAWPS
Hanford, WA

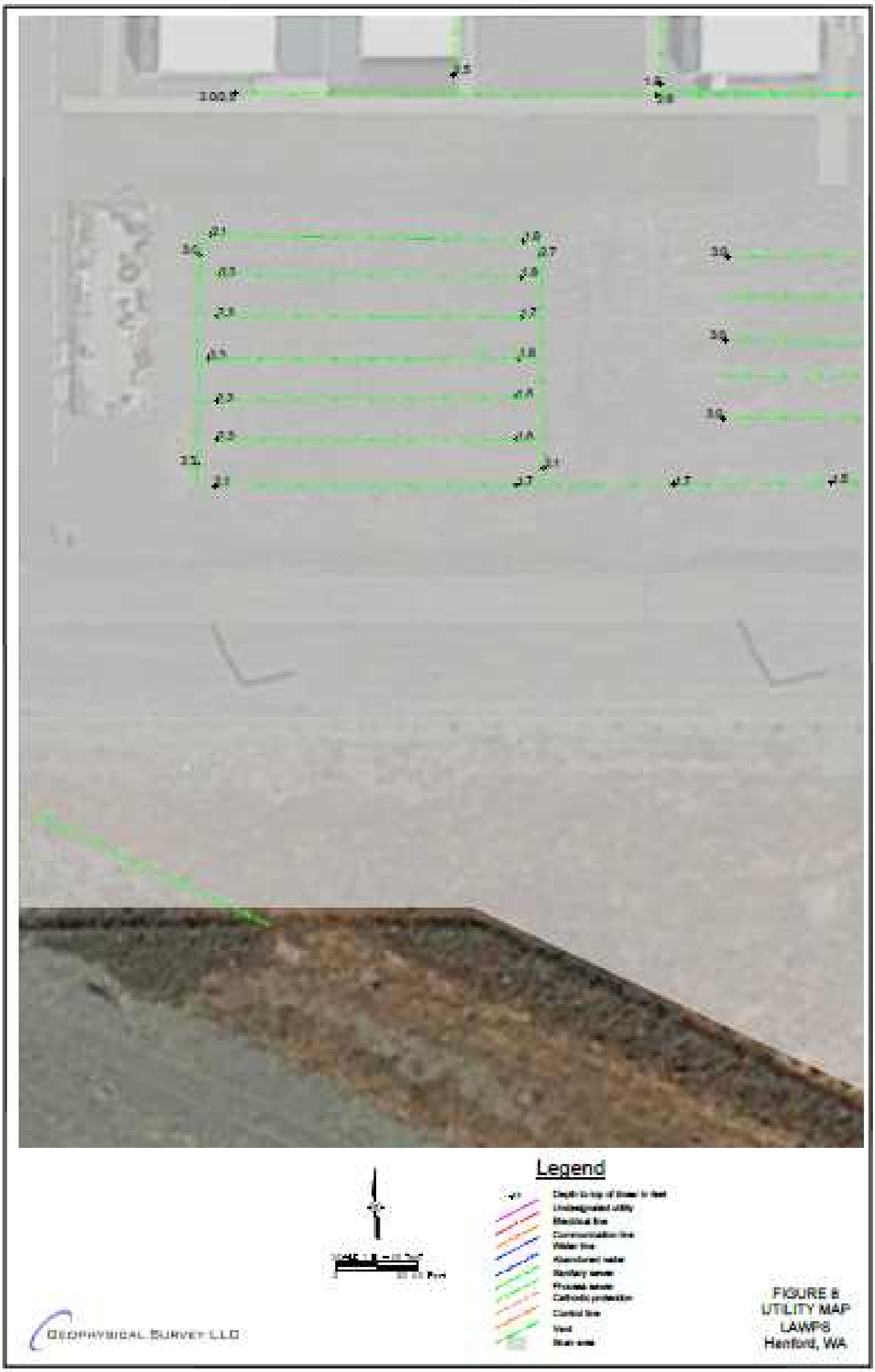
Legend
GEOPHYSICAL SURVEY LLC
FIGURE 8
UTILITY MAP
LAWPS
Hanford, WA

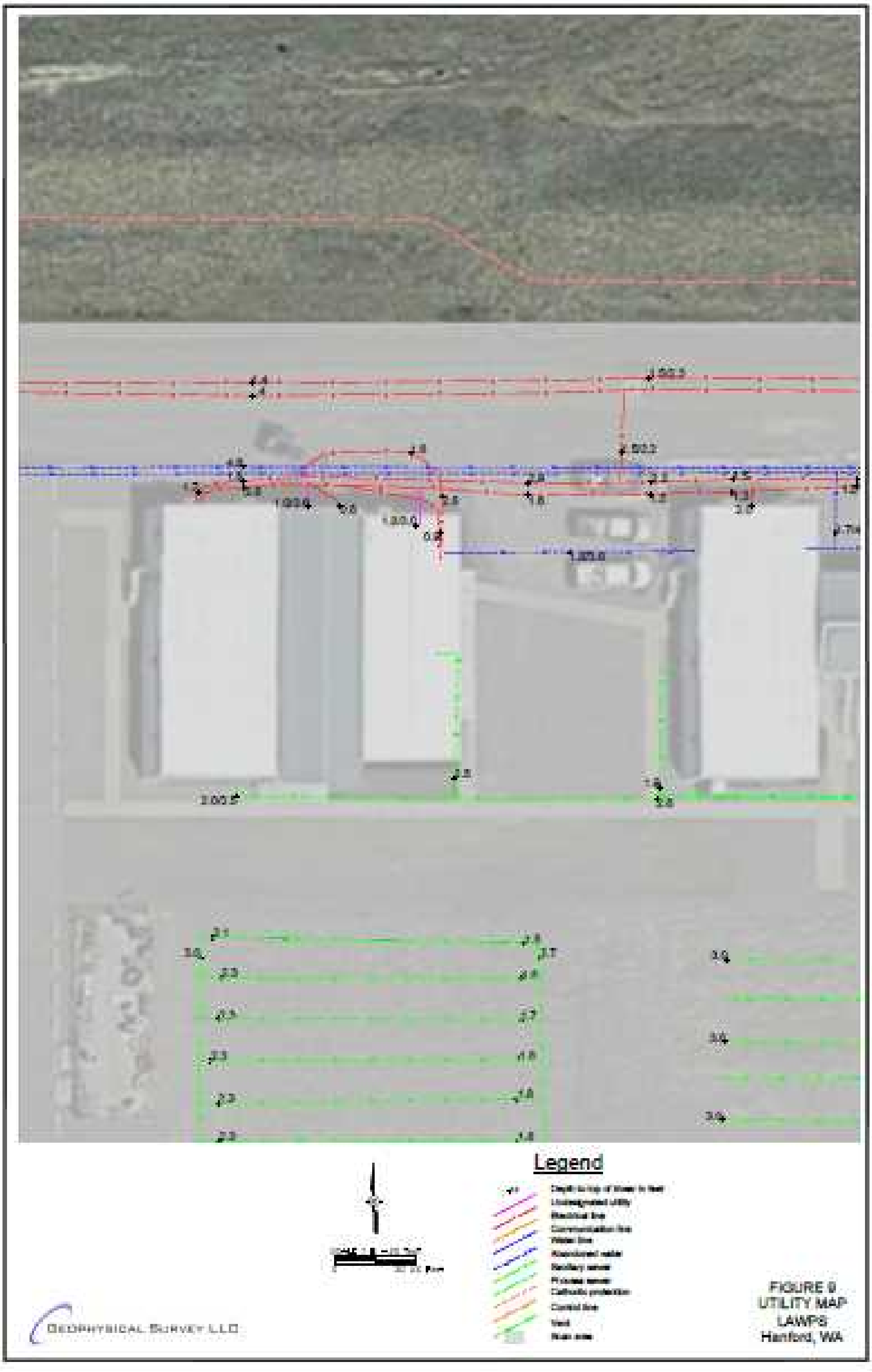
Legend
GEOPHYSICAL SURVEY LLC
FIGURE 9
UTILITY MAP
LAWPS
Hanford, WA

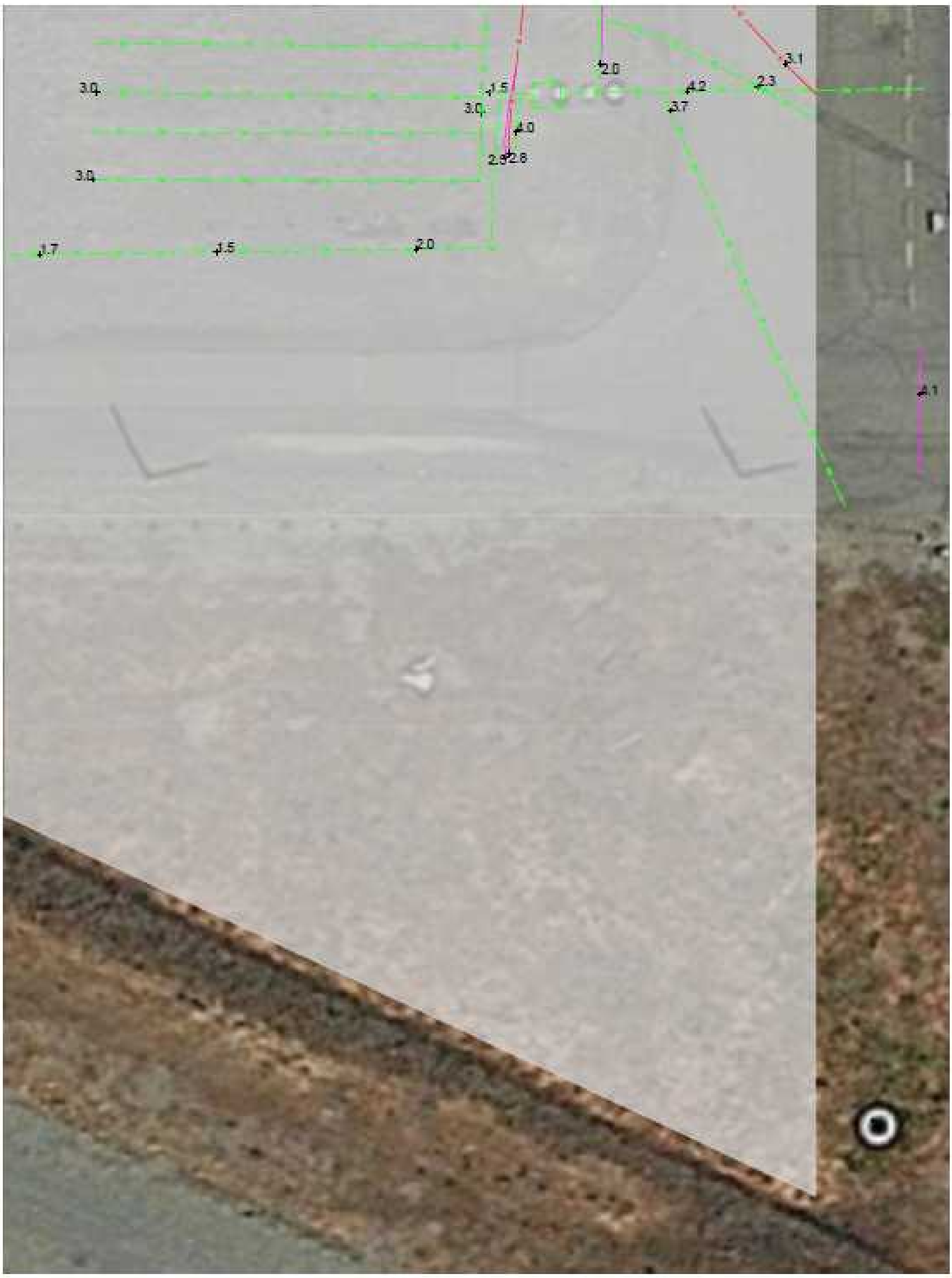


Legend

Depth to top of linear in feet
Undesignated utility
Electrical line
Communication line
Water line
Abandoned water
Sanitary sewer
Process sewer
Cathodic protection
Control line
Vent
Scan area

SCALE: 1 in =20 feet
0 20 US Feet

GEOPHYSICAL SURVEY LLC

FIGURE 10
UTILITY MAP
LAWPS
Hanford, WA

Legend
Depth to top of linear in feet
Undesignated utility
Electrical line
Communication line
Water line
Abandoned water
Sanitary sewer
Process sewer
Cathodic protection
Control line
Vent
Scan area
SCALE 1 in. =30 feet
0
30 US Feet
GEOPHYSICAL SURVEY LLC
FIGURE 11
UTILITY MAP
LAWPS
Hanford, WA

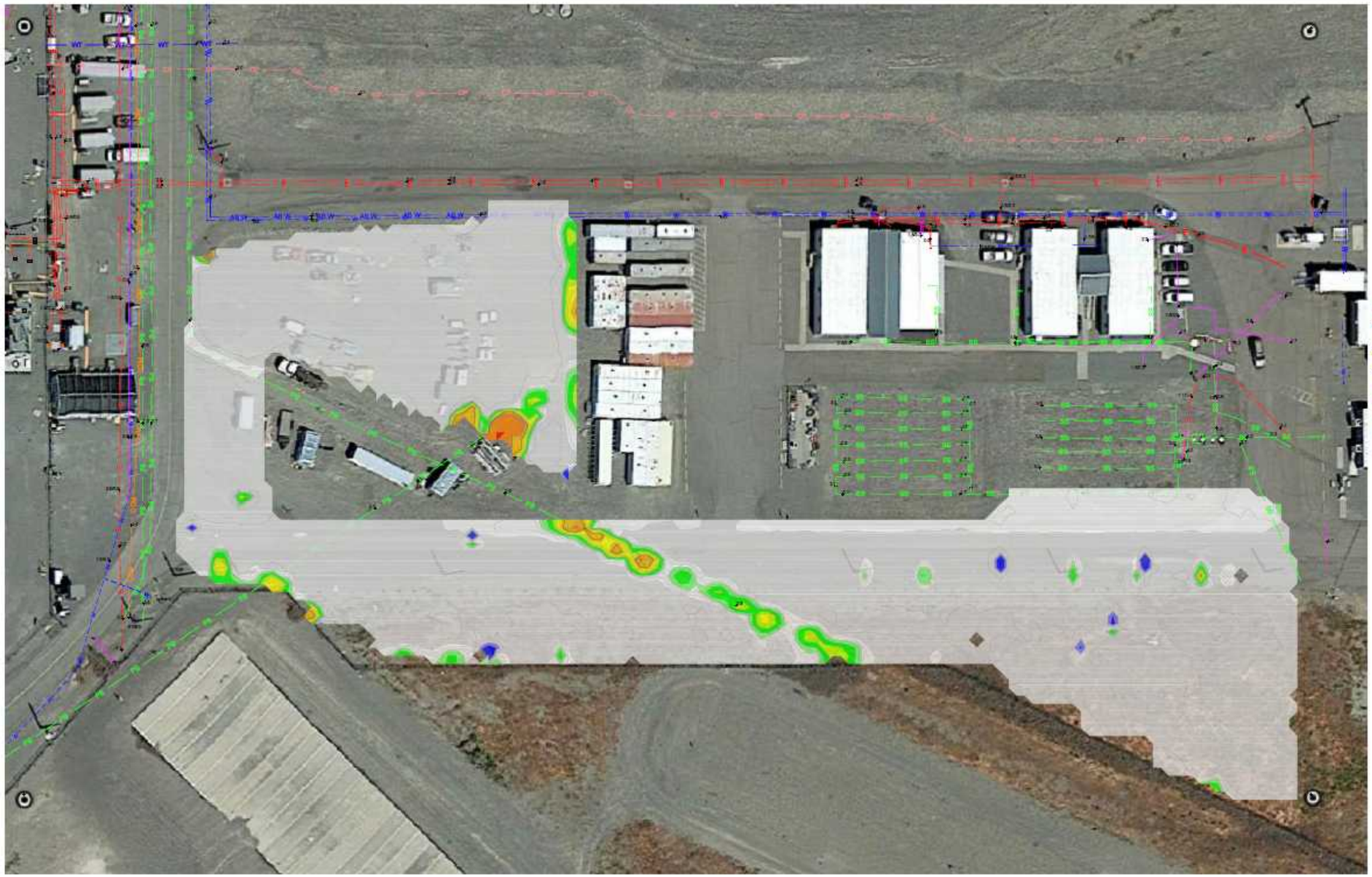


GEOPHYSICAL SURVEY LLC

FIGURE 12
EM CONTOURS
LAWPS
Hanford, WA

## 6.3 TOPOGRAPHICAL SURVEY

**TOC INCOMING LETTER OF TRANSMITTAL**

Vendor / Company Name and Address: BNL Technical Services LLC

| Date: | Subcontract Release Number/Purchase Order: | Transmittal Number: | Project #: | Project Title: |
|---|---|---|---|---|
| 05/11/2018 | 65928-REL 017 Rev1 | | | Perform Surveys for LAWPS |

Check the applicable designation

| Hard Copy Submittals | Electronic Submittals |
|---|---|
| **[ ] Construction Subcontract** | **[ ] Construction Subcontract** |
| Vendor is Off-Site:<br>WRPS/Construction & Commissioning Document Control<br>ATTN: CDC/ Mail Stop S7-68/2704HV/B200K<br>P. O. Box 850/ Richland, WA 99352 | WRPSCCDocControl@rl.gov |
| Vendor is On-Site:<br>WRPS C&C Document Control/ 2704HV/B200K/200E | |
| **[ ] All other Submittals** | **[X] All other Submittals** |
| Vendor is Off-Site:<br>c/o Lockheed Martin, ATTN: Document Control<br>Mail Stop R1-29/ P. O. Box 950/ Richland, WA 99362 | TOCVND@rl.gov |
| Vendor is On-Site:<br>WRPS/ Document Control/ 2750/D199/200E | ** Electronic Transmittal: To establish a File Transfer Protocol (FTP) to send and receive vendor material electronically contact Information Resource Management (IRM) this can be used versus email. |

| Submittal Number | Submittal Description | Spec # | Spec Paragraph # | Copies E / H | TOC Document Number | Rev | Supplier Document Number | Supplier Rev |
|---|---|---|---|---|---|---|---|---|
| 001 | Civil Survey Report | N/A | N/A | 1/0 | | | N/A | N/A |
| | | | | | | | | |

E = Electronic H = Hardcopy

Vendor / Company Representative: Signature — Seth LeMaster (Print) — 05/11/2018 (Date)

DCC Receipt Acknowledgement: Signature — Print — Date

RECEIVED
By Kimberly Saworski at 10:42 am, May 14, 2018

Page 1 of 1 A-6005-315 (REV 4)

# SURVEY DATA FORM

**Title/Affected Tank Farms:** 200EAST

Dome Elevation ☐ Civil ☒ Subsurface Investigations ☐

**1. Project Number:** N/A **2. Job Number:** N/A

**3. Prepared By:** MICHAEL F HARRINGTON (Print) (Sign) 5/11/18 (Date)

**4. Requisition Number:** N/A

**5. Subcontract-Release Number:** ~~49896-244~~ 65928-017 **6. Number of Pages or Images:** 1

**7. Sub Contract Release Number:** ~~49896-244~~ 65928-017

**8. Reviewer:** DAVID P. BAALMAN (Print) (Sign) 5-11-18 (Date)

**9. Document/Project Title:** SURVEY SUPPORT TO LAWPS

**10. Change Description:** N/A

**11. Change Justification:** N/A

**RECORDING DATA:**

**12. What is the Purpose of the Survey?** Revise drawing, plot and label survey monument 2E-18

**13. Attached files** (copy of civil survey field log book notes, electronic survey data print outs, GPR ground scan data, coordinate tables, drawings) ~~07118_R2.dwg and 07118_R2.PDF~~ Release 017_R2 LAWPS.dwg and Release 017_R2-LAWPS TOPO.pdf

**14. Electronic files downloaded** (copy of civil survey field log book .pdf, electronic survey data .csv, GPR ground scan data .dwg, coordinate tables .xls, drawings .dwg) .dwg file and .PDF file

**15. Control Monument References:** SL-1, SECTION CONTROL AS SHOWN IN FILE.

**16. Benchmark References:** SAME AS ABOVE

**17. Identification Number(s) of Equipment Used:** 1TRIMBLE DUAL FREQUENCY R8 RECIEVERS

**18. Survey Dates:** MARCH 20, 2018

**19. Names of Personnel Performing the Work:** Michael F. Harrington P.L.S.

**20. Weather Conditions:** Cloudy, 40°

**21. Calibration and Functional Check Information:** VERTICAL AND HORIZONTAL DATUM CHECKS.

**22. Horizontal and Vertical Survey Datum:** NAVD88' vertical, WCS NAD83/91 SOUTH ZONE GRID horizontal

**SURVEY RESULTS AND COMMENTS:** Drawing revision to prior submittal, as noted above line 12.

PLS Stamp

MICHAEL F. HARRINGTON STATE OF WASHINGTON 55516 REGISTERED PROFESSIONAL LAND SURVEYOR 5/11/2018

Page 1 of 2 (6005-997 REV 1)

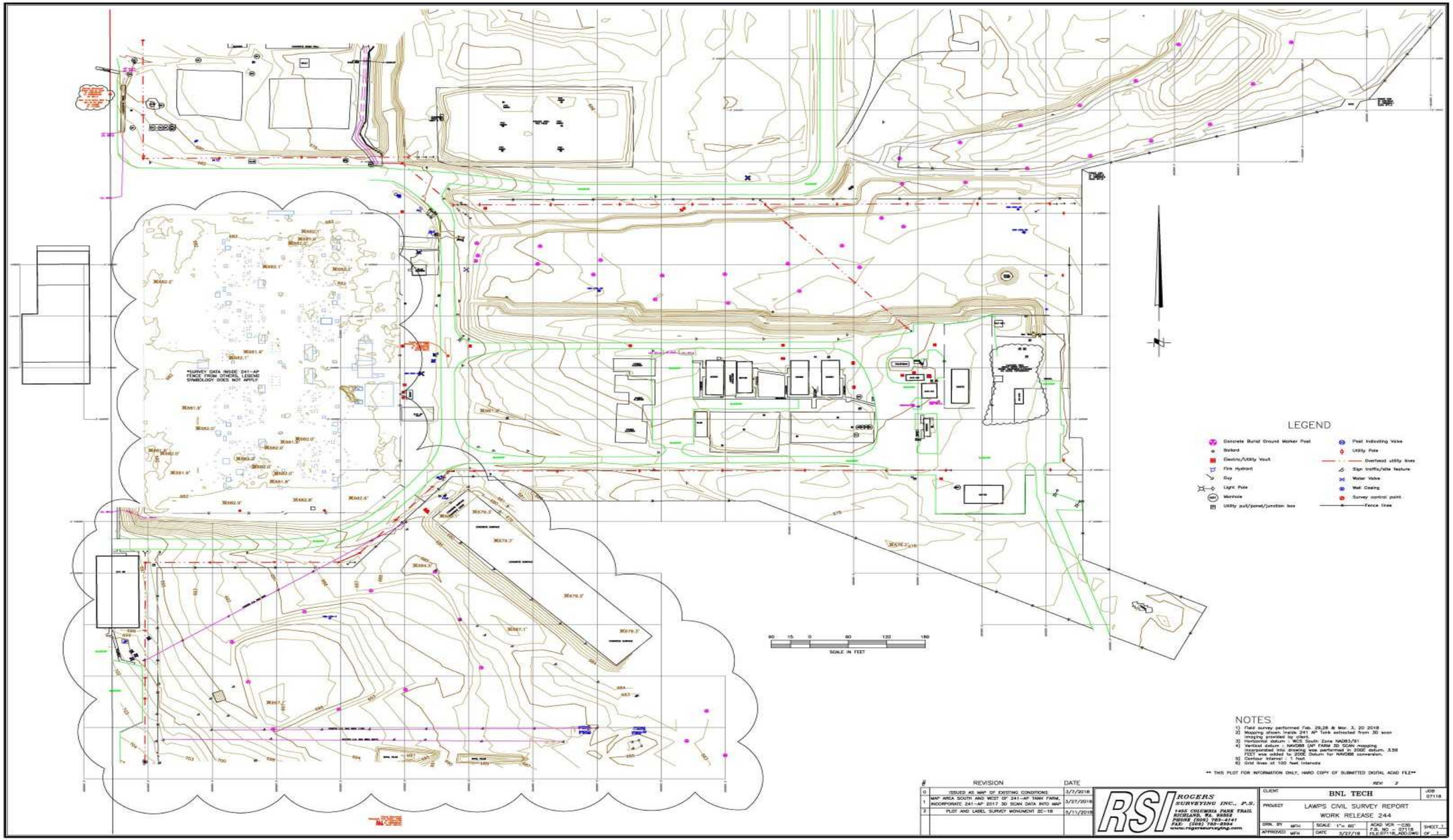
LEGEND
Concrete Burial Ground Marker Post
Bollard
Electric/Utility Vault
Fire Hydrant
Guy
Light Pole
Manhole
Utility pull/panel/junction box
Post Indicating Valve
Utility Pole
Overhead utility lines
Sign traffic/site feature
Water Valve
Well Casing
Survey control point
Fence line
SCALE IN FEET
NOTES
1) Field survey performed Feb. 26,28 & Mar. 3, 20 2018
2) Mapping shown inside 241 AP Tank extracted from 3D scan imaging provided by client.
3) Horizontal datum : WCS South Zone NAD83/91
4) Vertical datum : NAVD88 (AP FARM 3D SCAN mapping incorporated into drawing was performed in 2006 datum. 3.58 FEET was added to 2006 Datum for NAVD88 conversion.
5) Contour interval : 1 foot
6) Grid lines at 100 feet intervals
** THIS PLOT FOR INFORMATION ONLY, HARD COPY OF SUBMITTED DIGITAL ACAD FILE**
REV 2
# REVISION DATE
0 ISSUED AS MAP OF EXISTING CONDITIONS 3/7/2018
1 MAP AREA SOUTH AND WEST OF 241-AP TANK FARM, INCORPORATE 241-AP 2017 3D SCAN DATA INTO MAP 3/27/2018
2 PLOT AND LABEL SURVEY MONUMENT 2C-18 5/11/2018
RSI ROGERS SURVEYING INC., P.S.
1455 COLUMBIA PARK TRAIL
RICHLAND, WA. 99352
PHONE (509) 783-4141
FAX: (509) 783-8984
www.rogerssurveying.com
CLIENT BNL TECH
JOB 07118
PROJECT LAWPS CIVIL SURVEY REPORT
WORK RELEASE 244
DRN. BY MFH
SCALE 1"= 60'
ACAD VER -C3D
T.B. NO - 07118
FILE:07118_ADD.DWG
SHEET 1 OF 1
APPROVED MFH
DATE 3/27/18

## 6.4 PRELIMINARY FIRE HAZARD ANALYSIS



### EXECUTIVE SUMMARY

A preliminary fire hazards analysis has been completed to assess the TSCR project's risk from fire in relation to applicable requirements, notably DOE O 420.1C, "Facility Safety;" DOE O 440.1B, "Worker Protection Management for DOE Federal and Contractor Employees;" ENS-ENG-IP-05 R3, and applicable codes and standards. To comply with these requirements the following 11 recommendations have been made:

1. To meet the fire hydrant coverage guidance from DOE-STD-1066 and the criteria from MGT-ENG-IP-05, installation of an additional hydrant approximately 100 to 150 ft north of the TSCR gated entrance is required.
2. At the current stage of design, to comply with the applicable requirement references, installation of an FM Approved or UL listed packaged water mist system is required.
3. Based on the forklift fire scenario in section 8, a fire suppression system for the IXC forklift is required.
4. Consistent with NFPA 10, Standard for portable fire extinguishers, one fire extinguisher, with a minimum rating 2A:10B:C shall be installed in the TSCR Process Enclosure and the Ancillary Enclosure. A clean agent portable fire extinguisher with a minimum rating 2A:10B:C (example: Ansul FE13) shall be installed in the Control enclosure.
5. NFPA 69, "Standard for Explosion Prevention Systems", stipulates controls which limit flammable gas concentrations at or below 25% LFL when the process concentration is not continuously monitored. Thus, the following controls are required:
   - Provide a minimum ventilation rate for the IXCs (including when the fully loaded IXCs are disconnected from process piping) designed to keep the hydrogen concentration below 25% LFL for hydrogen (e.g. 1%).
   - Provide an administrative control for when normal ventilation is interrupted that re-establishes the minimum ventilation requirement (e.g. 8.63 E-02) within 11 days.
6. DOE Order 420.1C objectives include the application of highly protected risk approaches to fire protection such as the use FM approved hydraulic fluids. Thus, this analysis requires that an FM Approved fluid be used in the IXC transporter.
7. To minimize the risk of a forklift fuel spill and fire encroaching on the TSCR enclosure, design the IXC forklift pad with a minimum 1/8" per /12" slope.
8. Installation of a forklift vehicle fire suppression system and use of FM approved hydraulic fluid are also requirements as these provisions are consistent with DOE "highly protected risk" criteria.
9. Once the TSCR design is complete and prior to operations, development of a fire department pre-incident plan is required.
10. Installation of a lightning protection system for the TSCR and Controls enclosures in accordance with NFPA 780 is required.

Based on engineering judgement, the following observation is offered:

## 6.5 TSCR IXC CONCRETE STORAGE PAD SYSTEM SAFETY SIGNIFICANT DESIGN PARAMETERS

| TSCR IXC Concrete Storage Pad System Safety Significant Design Parameters | | | | | |
|---|---|---|---|---|---|
| **Safety Control** | **Control Type** | **Safety Functions** | **Functional Requirements** | **NPH Design Basis** | **Representative Accident** |
| PE.8. TSCR Process Enclosure Pad | Passive Engineered | PE.8.1. To protect the safety functions of the TSCR Process Enclosure and other safety-significant SSCs in the TSCR Process Enclosure by preventing the TSCR Process Enclosure from tipping and sliding in seismic and high-wind events. | PE.8.1.1. The TSCR Enclosure Pad is required to maintain a sufficient connection with the TSCR Process Enclosure anchoring tabs to prevent separation of the TSCR Process Enclosure from the feed and product stream transfer lines and to prevent the enclosure from toppling. | SDC-2, Limit State B | Natural Phenomena Hazard Events |
| PE.9. TSCR Spent Ion-Exchange Column Storage Pad Vehicle Barriers | Passive Engineered | PE.9.1. To mitigate the onsite and facility worker consequences of a high-energy impact by providing a physical barrier between vehicles and loaded ion-exchange columns. | PE.9.1.1. The TSCR and Spent ion-exchange column Storage Pad Vehicle Barriers are required to be located between loaded ion-exchange columns and vehicle traffic capable of resulting in a high energy impact with any of the loaded ion-exchange columns inside the TSCR unit or on the Spent ion-exchange column Storage Pad. | N.A. | High-Energy Impact with a Loaded IXC |
| | | | PE.9.1.2. The TSCR and Spent ion-exchange column Storage Pad Vehicle Barriers are required to be of sufficient shape, dimensions, and mass to reduce the speed of a 6,000 pound vehicle from 25 mph to 10 mph in a direct (i.e., perpendicular) impact scenario. | N.A. | High-Energy Impact with a Loaded IXC |
| PE.10. TSCR Forklift Load Height Restriction | Passive Engineered | PE.10.1. To protect the facility worker from the consequences of a loaded ion-exchange column drop event by limiting the height to which the forklift can lift an ion-exchange column. | PE.10.1.1. The TSCR Forklift Load Height Restriction is required to limit the height for which the forklift can lift an ion-change column to less than 3 feet. | N.A. | Single, Loaded IXC Drop or Tipover in the TSCR Enclosure, during Transport to the IXC Interim Storage Pad, or on the IXC Interim Storage Pad |

## 6.6 TSCR ANCHORING BASE FOR STORAGE PAD

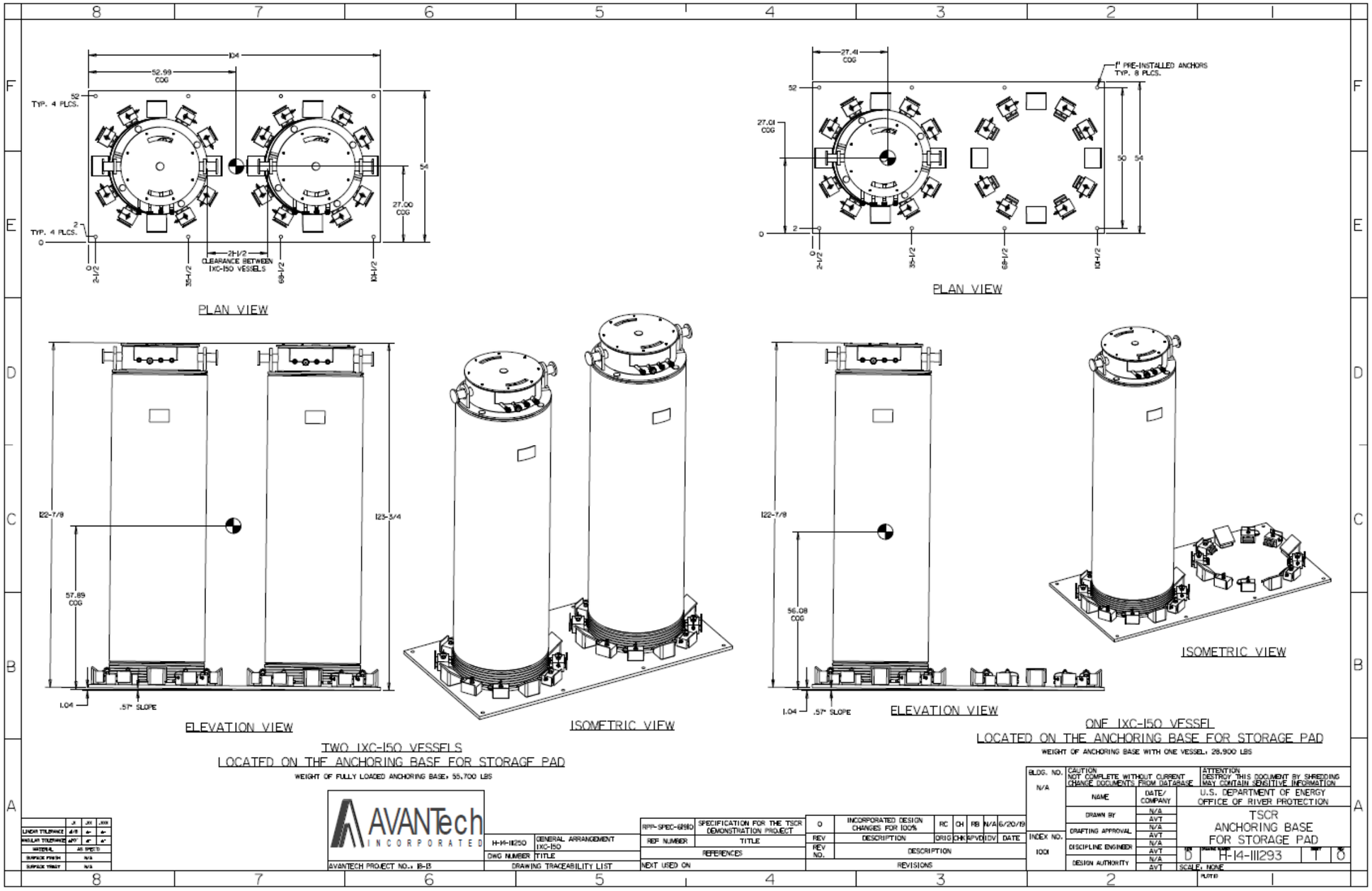

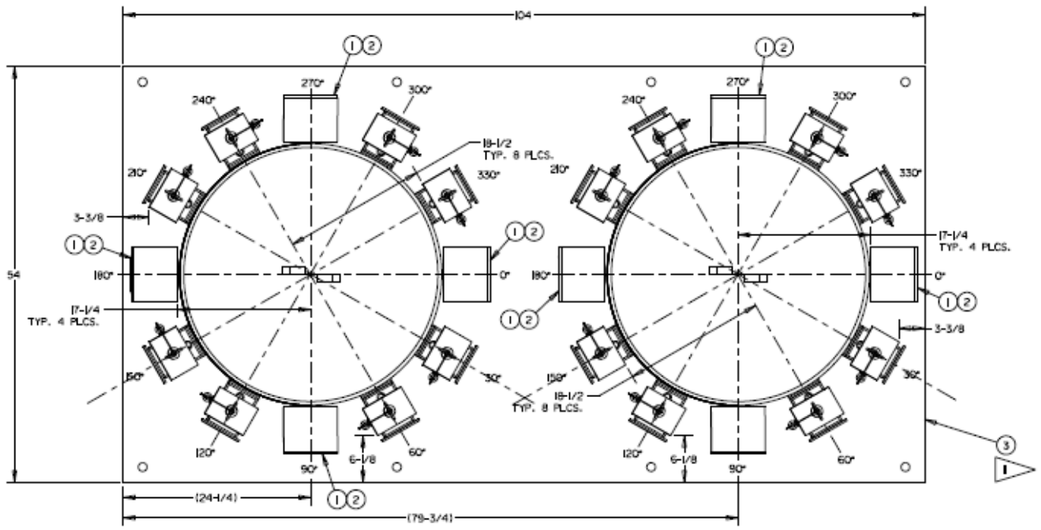


PLAN VIEW

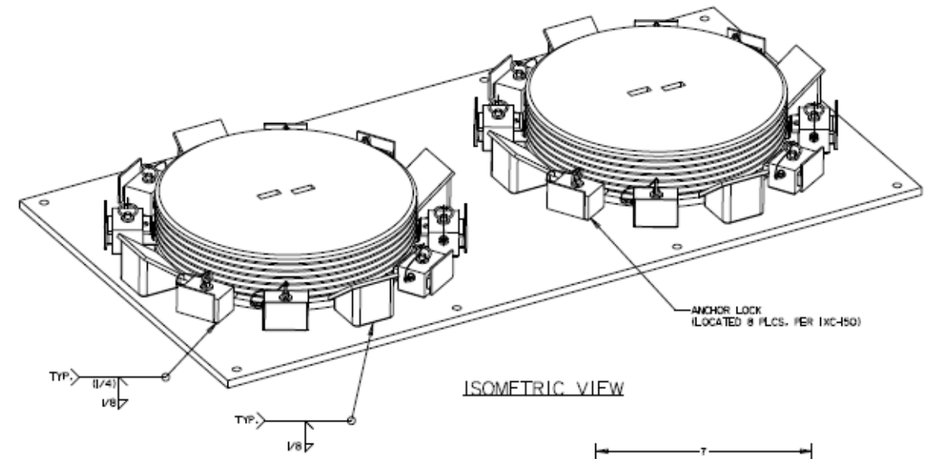


ISOMETRIC VIEW

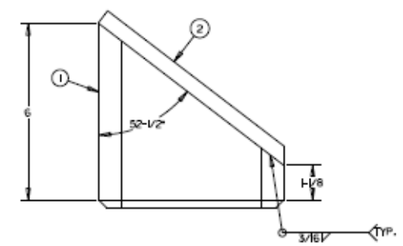


IXC-150 GUIDE
LEFT VIEW

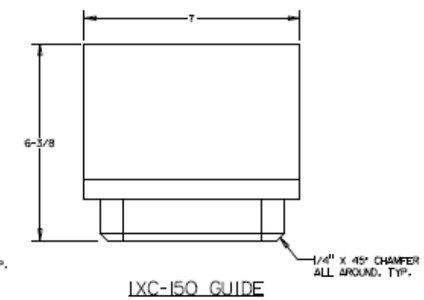


IXC-150 GUIDE
FRONT VIEW

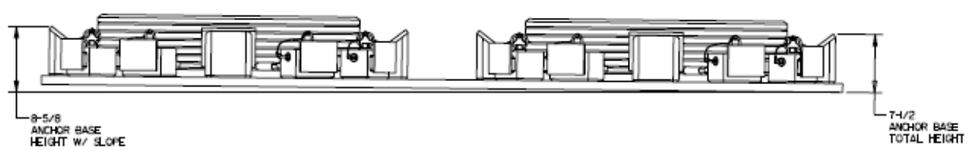


ELEVATION VIEW

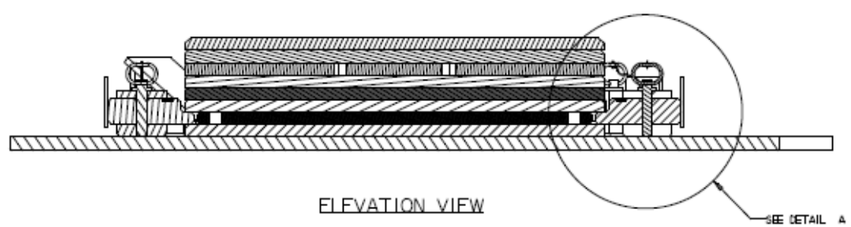


ELEVATION VIEW

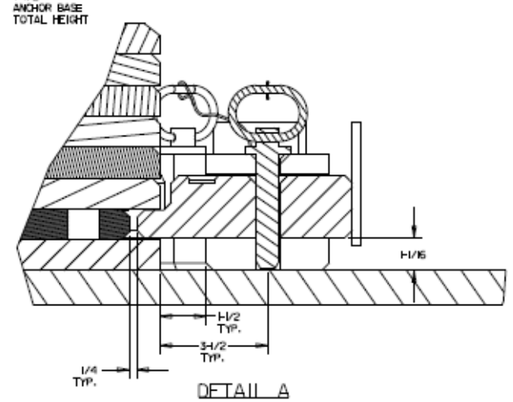


DETAIL A

NOTES:
1. DEBURR, BREAK ALL SHARP EDGES, AND REMOVE ALL WELD SPATTER.
2. ALL WELDING TO BE PERFORMED IN ACCORDANCE WITH AVANTECH WELD PROCEDURES AWS D1.6., 2017 EDITION. AT-D1.6-FCAW-68, AT-D1.6-GMAW-52, & AT-D1.6-GTAW-69
3. WELDING ACCEPTANCE CRITERIA PER AWS D1.6, 2017 EDITION.
4. ALL DIMENSIONS TO UTILIZE TOLERANCE TABLE UNLESS OTHERWISE SPECIFIED.
5. ALL WELDS SHALL BE 100% VT
6. VERTICAL WELDING SHALL BE VERTICAL UP.
7. ALL DIMENSIONS ARE FOR REFERENCE ONLY UNLESS OTHERWISE SPECIFIED.
8. ABBREVIATIONS ARE IN ACCORDANCE WITH ASME Y14.38 (LATEST EDITION).
9. DIMENSIONS AND TOLERANCING ARE PER ASME Y14.38 (LATEST EDITION) ALL DIMENSION ARE IN INCHES.
10. STORAGE BASE WEIGHT: 2250 LB.
11. ⟨ INDICATES THAT THE ITEM IS SAFETY SIGNIFICANT. ALL SAFETY SIGNIFICANT ITEMS SHALL BE PURCHASED FROM AN EVALUATED SUPPLIER OR COMMERCIAL GRADE DEDICATED PRIOR TO INSTALLATION.

| ITEM | QTY | DESCRIPTION | SPEC AND/OR PART NO | WRPS QL |
|---|---|---|---|---|
| 3 | 1 | PLATE, 104" X 54" X 1-1/8" THK., 304 S.S., SEE ITEM 3 DETAIL ON SHT. 4 | ASTM A240 | 2 |
| 2 | 8 | PLATE, 7-5/8" X 7" X 1/2" THK., 304 S.S. | ASTM A240 | 3 |
| 1 | 8 | TUBESTEEL, 6" X 6" X 1/4" THK., 6" LG., 304 S.S., ONE END MITERED 37-1/2° | ASTM A554 | 3 |

BLDG. NO.: N/A
CAUTION: NOT COMPLETE WITHOUT CURRENT CHANGE DOCUMENTS FROM DATABASE
ATTENTION: DESTROY THIS DOCUMENT BY SHREDDING MAY CONTAIN SENSITIVE INFORMATION

| | NAME | DATE/ COMPANY |
|---|---|---|
| DRAWN BY | | N/A AVT |
| DRAFTING APPROVAL | | N/A AVT |
| DISCIPLINE ENGINEER | | N/A AVT |
| DESIGN AUTHORITY | | N/A AVT |

U.S. DEPARTMENT OF ENERGY
OFFICE OF RIVER PROTECTION

TSCR
ANCHORING BASE
FOR STORAGE PAD

INDEX NO.: 1001
REV: 0 DRAWING NUMBER: H-14-111293 SHEET: 2 OF: 0
SCALE: NONE

| REV NO. | DESCRIPTION | ORIG | CHK | APVD | IDV | DATE |
|---|---|---|---|---|---|---|
| 0 | INCORPORATED DESIGN CHANGES FOR 100% | RC | CH | RB | N/A | 6/20/19 |

REVISIONS

| REF NUMBER | TITLE |
|---|---|
| RPP-SPEC-61910 | SPECIFICATION FOR THE TSCR DEMONSTRATION PROJECT |

REFERENCES

NEXT USED ON

AVANTECH INCORPORATED
AVANTECH PROJECT NO.: 18-13
DWG NUMBER: H-14-112150
TITLE: GENERAL ARRANGEMENT IXC-150
DRAWING TRACEABILITY LIST

| | .X | .XX | .XXX |
|---|---|---|---|
| LINEAR TOLERANCE | ±0.15 | ±.- | ±.- |
| ANGULAR TOLERANCE | ±0° | ±.- | ±.- |
| MATERIAL | AS SPECIFIED | | |
| SURFACE FINISH | N/A | | |
| SURFACE TREAT | N/A | | |

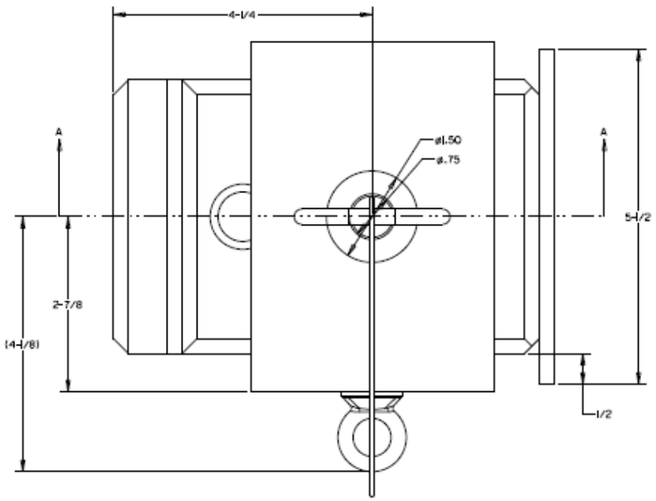


ANCHOR LOCK
PLAN VIEW (QTY: 16)

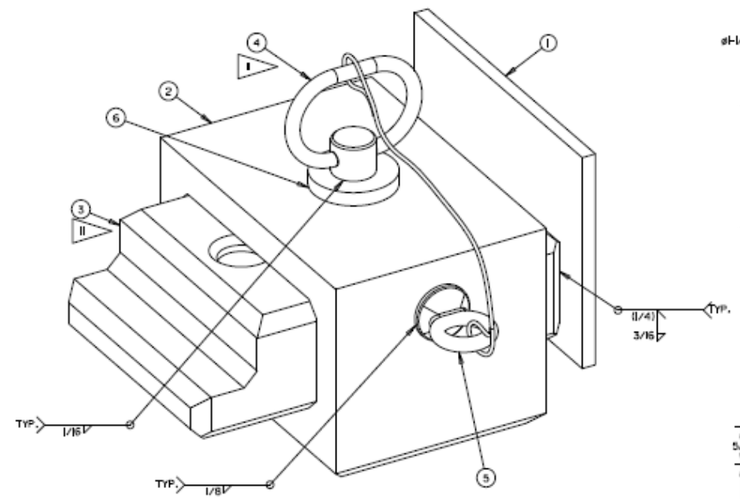


ANCHOR LOCK
ISOMETRIC VIEW (QTY: 16)

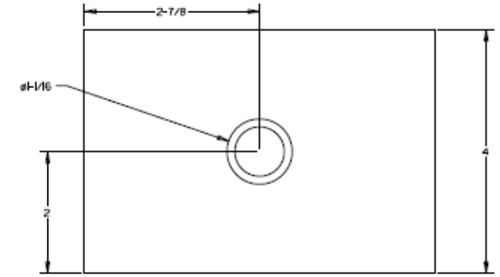


ITEM 2 DETAIL
TOP VIEW

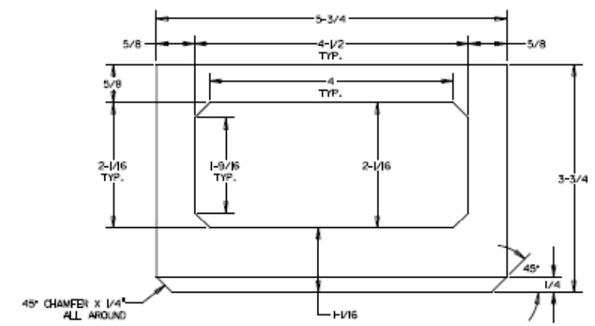


ITEM 2 DETAIL
LEFT VIEW

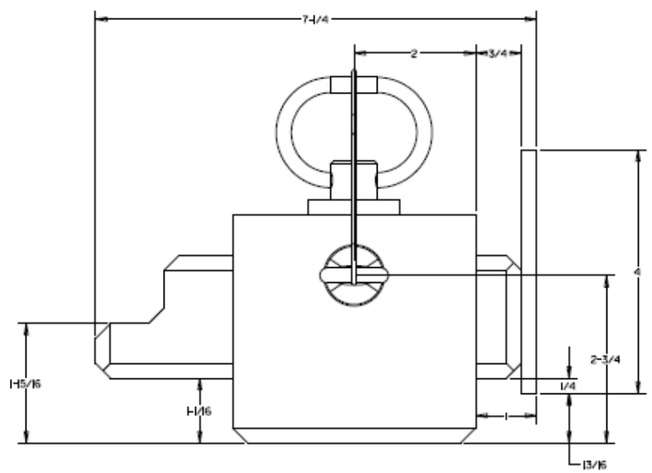


ANCHOR LOCK
ELEVATION VIEW (QTY: 16)

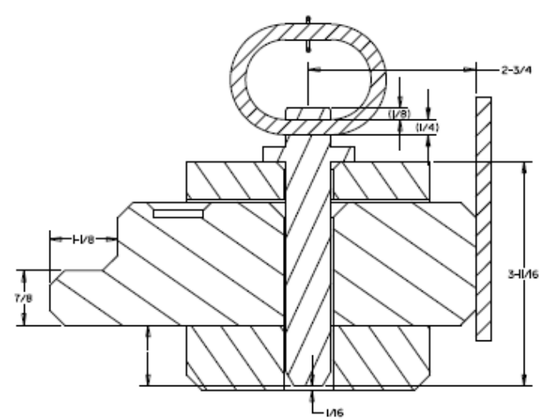


SECTION A-A

| ITEM | QTY | DESCRIPTION | SPEC AND/OR PART NO | WRPS QL |
|---|---|---|---|---|
| 6 | 16 | ROUND PLATE, 1-1/2" OD X 3/4" ID X 1/4" THK., 304 S.S. | ASTM A240 | 3 |
| 5 | 16 | FIXED WELD-ON TIE-DOWN RING, 5/8" INNER WIDTH, 1-5/16" HIGH, 18-8 S.S. | MCMASTER CARR #8892T11 OR EQUIV. | 3 |
| 4 | 16 | 3/4" DIA. ROUND BAR W/ LANYARD HOLE, 3-1/16" LG., 304 S.S., SEE ITEM 4 DETAIL ON SHT. 4 | ASTM A276 | 2 |
| 3 | 16 | PLATE, 7" X 4-1/2" X 2" THK., 304 S.S., SEE ITEM 3 DETAIL ON SHT. 4 | ASTM A240 | 2 |
| 2 | 16 | PLATE, 5-3/4" X 4" X 3-3/4" THK., 304 S.S. SEE ITEM 2 DETAIL ON SHT. 3 | ASTM A240 | 3 |
| 1 | 16 | PLATE, 5-1/2" X 4" X 1/4" THK., 304 S.S. | ASTM A240 | 3 |

BLDG. NO. N/A

CAUTION
NOT COMPLETE WITHOUT CURRENT CHANGE DOCUMENTS FROM DATABASE

ATTENTION
DESTROY THIS DOCUMENT BY SHREDDING MAY CONTAIN SENSITIVE INFORMATION

| NAME | DATE/ COMPANY |
|---|---|
| DRAWN BY | N/A AVT |
| DRAFTING APPROVAL | N/A AVT |
| DISCIPLINE ENGINEER | N/A AVT |
| DESIGN AUTHORITY | N/A AVT |

U.S. DEPARTMENT OF ENERGY
OFFICE OF RIVER PROTECTION

TSCR
ANCHORING BASE
FOR STORAGE PAD

D H-14-111293 3 0

SCALE: NONE

INDEX NO. 1001

| | .X | .XX | .XXX |
|---|---|---|---|
| LINEAR TOLERANCE | ±0.05 | ±. | ±. |
| ANGULAR TOLERANCE | ±0° | ±0° | ±0° |
| MATERIAL | AS SPEC'D | | |
| SURFACE FINISH | N/A | | |
| SURFACE TREAT | N/A | | |

AVANTech INCORPORATED
AVANTECH PROJECT NO.: 18-13

| DWG NUMBER | TITLE |
|---|---|
| H-14-11250 | GENERAL ARRANGEMENT TXC-ISO |

DRAWING TRACEABILITY LIST

| REF NUMBER | TITLE |
|---|---|
| RPP-SPEC-61910 | SPECIFICATION FOR THE TSCR DEMONSTRATION PROJECT |

REFERENCES

NEXT USED ON

| REV NO. | DESCRIPTION | ORIG | CHK | APVD | IDV | DATE |
|---|---|---|---|---|---|---|
| 0 | INCORPORATED DESIGN CHANGES FOR 100% | RC | CH | RB | N/A | 6/20/19 |

REVISIONS

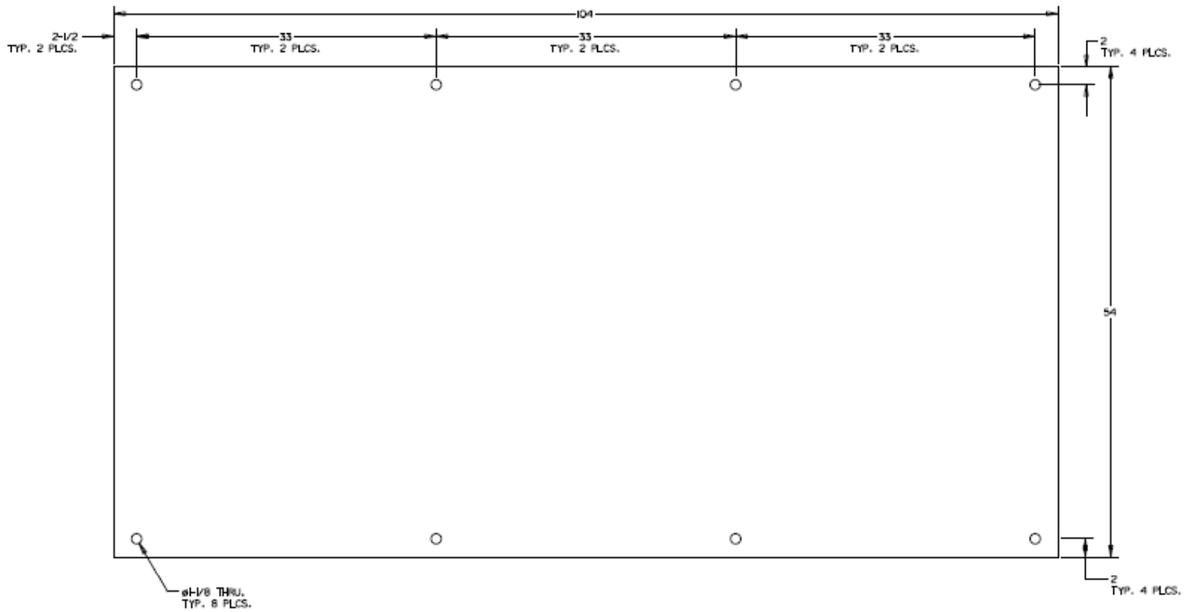


ITEM 3 DETAIL
SEE SHT. 2

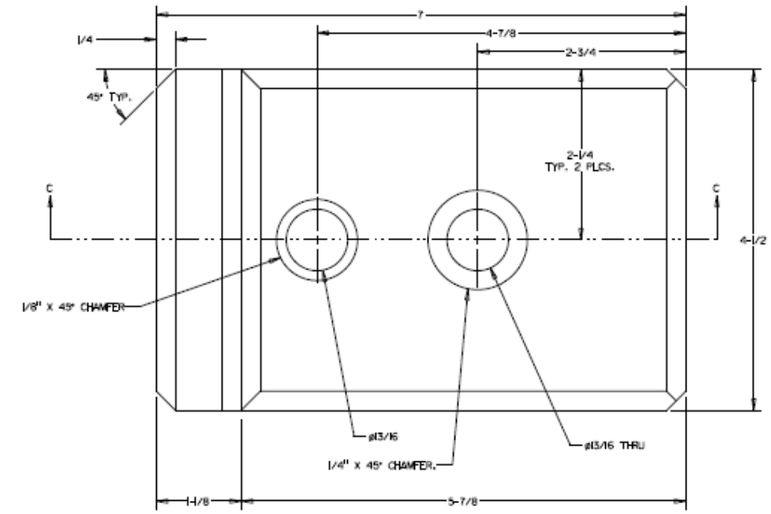


ITEM 3 DETAIL
TOP VIEW (SEE SHT. 3)

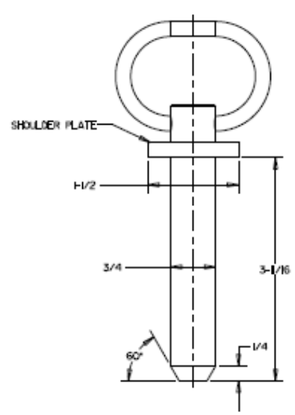


ITEM 4 DETAIL
FRONT VIEW (SEE SHT. 3)

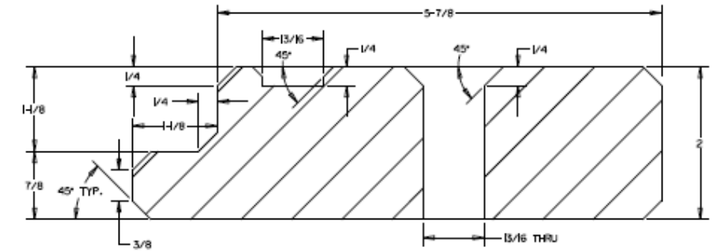


SECTION C-C

| | | |
|---|---|---|
| LINEAR TOLERANCE | ±1/16 | ±.1 | ±.01 |
| ANGULAR TOLERANCE | ±1/2° | ±1° | ±.5° |
| MATERIAL | AS SPEC'D | | |
| SURFACE FINISH | N/A | | |
| SURFACE TREAT | N/A | | |

AVANTech INCORPORATED
AVANTECH PROJECT NO.: 18-13

| | |
|---|---|
| H-14-112510 | GENERAL ARRANGEMENT IXC-150 |
| DWG NUMBER | TITLE |
| DRAWING TRACEABILITY LIST | |

| | |
|---|---|
| RPP-SPEC-61910 | SPECIFICATION FOR THE TSCR DEMONSTRATION PROJECT |
| REF NUMBER | TITLE |
| REFERENCES | |
| NEXT USED ON | |

| REV | DESCRIPTION | ORIG | CHK | APVD | IDV | DATE |
|---|---|---|---|---|---|---|
| 0 | INCORPORATED DESIGN CHANGES FOR 100% | RC | CH | RB | N/A | 6/20/19 |
| REV NO. | DESCRIPTION | | | | | |
| REVISIONS | | | | | | |

BLDG. NO. N/A
INDEX NO. 1001

CAUTION
NOT COMPLETE WITHOUT CURRENT CHANGE DOCUMENTS FROM DATABASE

ATTENTION
DESTROY THIS DOCUMENT BY SHREDDING MAY CONTAIN SENSITIVE INFORMATION

| NAME | DATE/ COMPANY |
|---|---|
| DRAWN BY | N/A AVT |
| DRAFTING APPROVAL | N/A AVT |
| DISCIPLINE ENGINEER | N/A AVT |
| DESIGN AUTHORITY | N/A AVT |

U.S. DEPARTMENT OF ENERGY
OFFICE OF RIVER PROTECTION

TSCR
ANCHORING BASE
FOR STORAGE PAD

REV D | DRAWING NUMBER H-14-111293 | SHEET 4 | OF 6

SCALE: NONE

PLOTTED

## 6.7 IXC GENERAL ARRANGEMENT

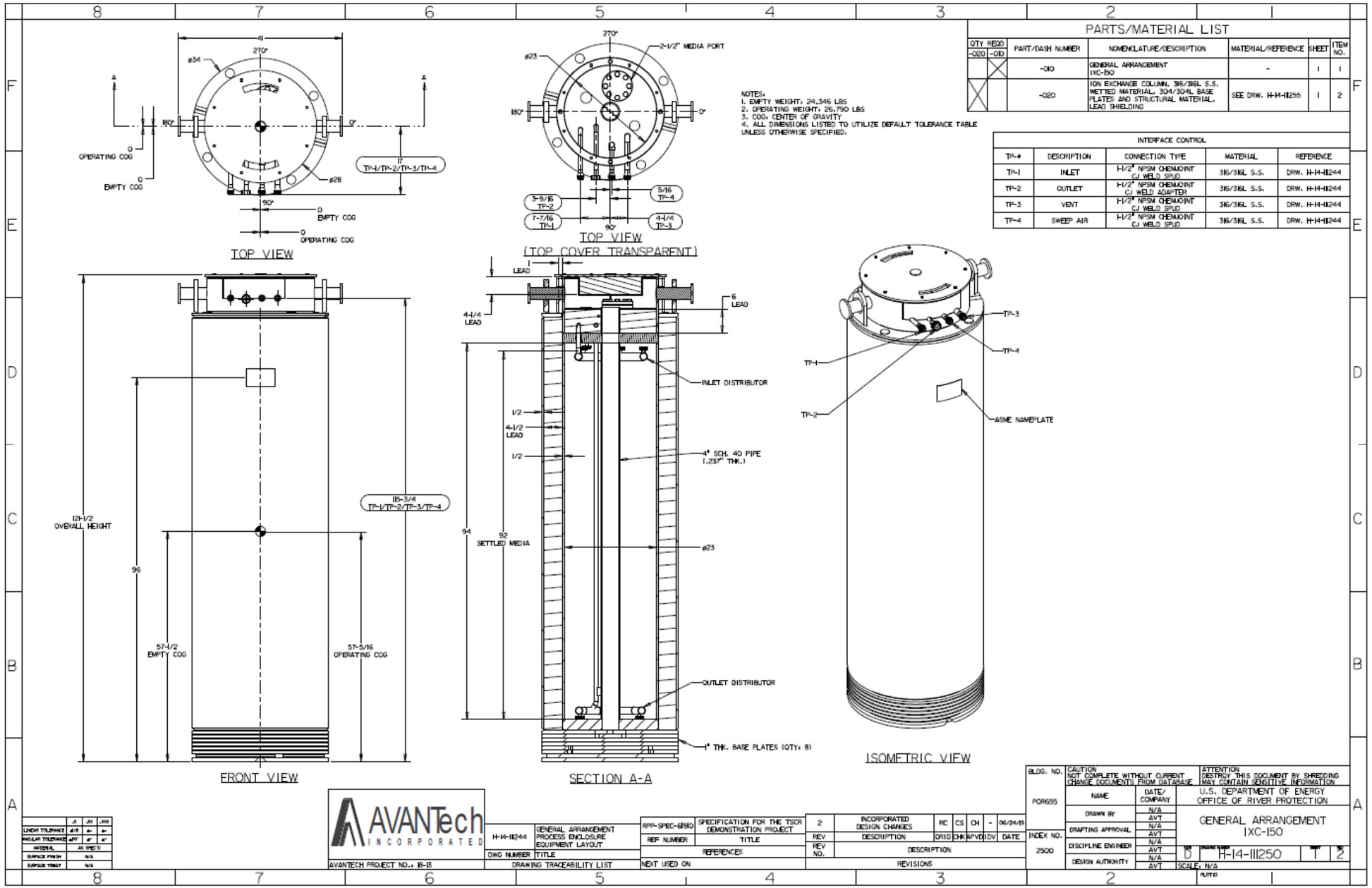
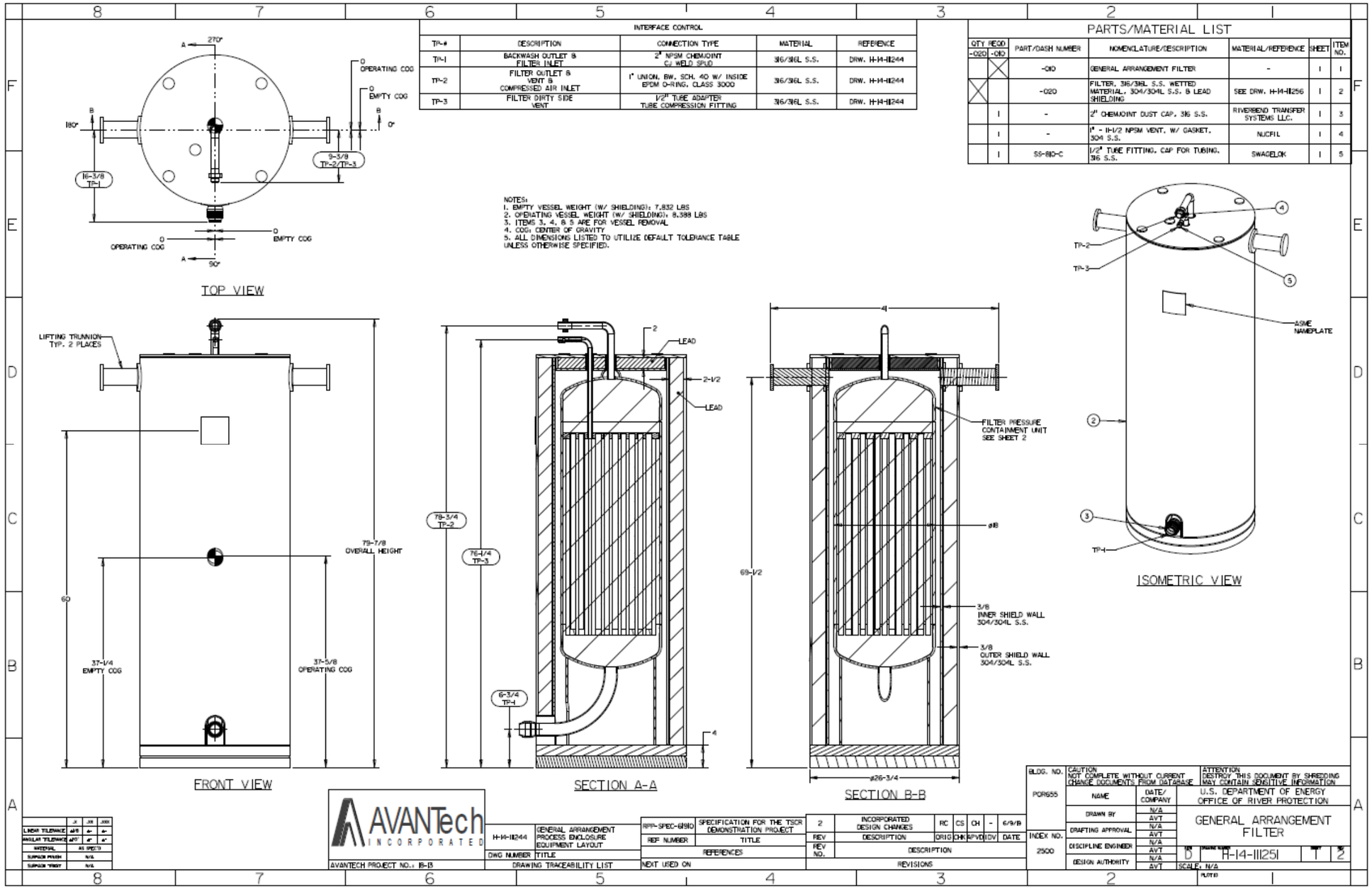
## 6.8 FILTER GENERAL ARRANGEMENT