DOCUMENT RELEASE AND CHANGE FORM

Prepared For the U.S. Department of Energy, Assistant Secretary for Environmental Management
By Washington River Protection Solutions, LLC., PO Box 850, Richland, WA 99352
Contractor For U.S. Department of Energy, Office of River Protection, under Contract DE-AC27-08RV14800

TRADEMARK DISCLAIMER: Reference herein to any specific commercial product, process, or service by trade name, trademark, manufacturer, or otherwise, does not necessarily constitute or imply its endorsement, recommendation, or favoring by the United States government or any agency thereof or its contractors or subcontractors. Printed in the United States of America.

Release Stamp

DATE:
Aug 02, 2019
HANFORD RELEASE

1. **Doc No:** RPP-14859 **Rev.** 14

2. **Title:**
Specification for Hose-in-Hose Transfer Lines and Hose Jumpers

3. **Project Number:** ☐N/A
IEA02, T1P190

4. **Design Verification Required:**
☒Yes ☐No

5. **USQ Number:** ☒ N/A
N/A-8

6. **PrHA Number** **Rev.** ☐ N/A
PrHA-57361 00

Clearance Review Restriction Type:
public

7. **Approvals**

Title	Name	Signature	Date
Clearance Review	Aardal, Janis D	*Aardal, Janis D*	08/02/2019
Design Authority	Erhart, Michael F	*Erhart, Michael F*	07/22/2019
Design Verifier	White, Michael A	*White, Michael A*	07/15/2019
Checker	Dahl, Megan M	*Dahl, Megan M*	07/11/2019
Document Control Approval	Crockett, Shelby	*Crockett, Shelby*	08/02/2019
Environmental Protection	Klages, Deanna L	*Klages, Deanna L*	07/18/2019
Engineering Discipline Lead-Mechanical	Goessmann, Glen E	*Goessmann, Glen E*	07/18/2019
Originator	Nelson, Richard L	*Nelson, Richard L*	07/15/2019
Other Approver	Chamberlain, Blake E	*Chamberlain, Blake E*	07/22/2019
Other Approver	Witherspoon, Jp	*Witherspoon, Jp*	07/22/2019
PrHA Lead	Kozlowski, Stephen D	*Kozlowski, Stephen D*	07/22/2019
Responsible Engineering Manager	Leonard, Michael W	*Leonard, Michael W*	07/24/2019
USQ Evaluator	Kozlowski, Stephen D	*Kozlowski, Stephen D*	07/22/2019

8. **Description of Change and Justification**

This revision adds section B2.1, "TSCR Feed Waste Properties", which includes Tables B2-3 through B2.6. The chemical consitituents for the 241-A Farm supertank are now included in Appendix B. This revision also removes the combined 241-A and 241-AX supertank chemical constintuent table as it is no longer needed.

Daniel Whitted has performed the Design Verification for this Specification. The scope of this Design Verification was limited to the changes described above.

However, Daniel is not able to sign the document within SPF. Therefore, Mike White has/will sign for Daniel Whitted as Design Verifier.

9. **TBDs or Holds** ☒N/A

10. **Related Structures, Systems, and Components**

a. **Related Building/Facilities** ☐N/A	b. **Related Systems** ☐N/A	c. **Related Equipment ID Nos. (EIN)** ☒N/A
241-AP	241-WT	

11. **Impacted Documents – Engineering** ☒N/A

Document Number	Rev.	Title

12. **Impacted Documents (Outside SPF):**

N/A

13. **Related Documents** ☐N/A

Document Number	Rev.	Title
HNF-SD-WM-SP-012	06	TANK WASTE REMEDIATION SYSTEM OPERATION AND UTILIZATION PLAN, VOL I & II
RPP-14541	07	Jumper Fabrication and Testing Specification for Tank Farms
RPP-5346	02	WASTE FEED DELIVERY TRANSFER SYSTEM ANALYSIS
RPP-7756	00	ENGINEERING TEST PLAN FOR TESTING THE HOSE-IN-HOSE DESIGN
RPP-SPEC-62663	00	Construction Specification For: TSCR Upgrades, Waste Feed Delivery & TSCR IXC Storage Pad

14. **Distribution**

Name	Organization
Blaak, Whitney S	COGNIZANT SYSTEM ENGINEERING
Carpenter, Bruce	DFLAW PROJECTS ENGINEERING
Chamberlain, Blake E	DFLAW PROJECTS ENGINEERING
Erhart, Michael F	AY/AX FARM RETRIEVAL ENGRNG
Follett, Jordan R	RETRIEVAL PROCESS ENGINEERING
Goessmann, Glen E	ENGINEERING PROGRAMS

DOCUMENT RELEASE AND CHANGE FORM	**Doc No:** RPP-14859 **Rev.** 14

14. **Distribution**

Name	**Organization**
Klages, Deanna L	RETRVL & CLOSURE/PROJ ENV CMPL
Kozlowski, Stephen D	NUCLEAR SAFETY
Leonard, Michael W	DFLAW PROJECTS ENGINEERING
Thompson, Tyler J	PROCUREMENT QA
Witherspoon, Jp	DFLAW PROJECTS ENGINEERING

RPP-14859
Revision 14

Specification for Hose-in-Hose Transfer Lines and Hose Jumpers

Prepared by

Michael F Erhart
Washington River Protection Solutions, LLC

Date Published
July 2019

Prepared for the U.S. Department of Energy
Office of River Protection

Contract No. DE-AC27-08RV14800

Approved for Public Release;
Further Dissemination Unlimited

SPECIFICATION FOR HOSE-IN-HOSE TRANSFER LINES AND HOSE JUMPERS

July 2019

Prepared by

ARES ESD,
A division of Sargent & Lundy
Engineering Services, Inc.
1100 Jadwin Avenue, Suite 400
Richland, Washington 99352-3425
(509) 946-3300

prepared for

Washington River Protection Solutions, LLC

TABLE OF CONTENTS

1.0 SCOPE 1
1.1 General Description 1
1.1.1 Transfer Lines 1
1.1.2 Non-Metallic Flexible Hose Jumpers 1
1.1.3 End Fittings 1
1.1.4 End Connections 2
1.2 Work Included 2
1.2.1 Component Manufacture 2
1.2.2 Qualifications and Training 2
1.2.3 Transfer Line and Hose Jumper Assemblies 3
1.2.4 Evaluation, Inspection, and Test 3
1.2.5 Document Submittal 3
1.2.6 Shipment 3
1.3 Work Not Included 3
1.3.1 Field Installation 3
1.3.2 Buyer-Performed Tests 3

2.0 APPLICABLE DOCUMENTS 3
2.1 Government Documents 3
2.2 Non-Government Documents 4
2.3 Non-Government Non-Code of Record Documents 5
2.3.1 Documents 5
2.3.2 Sketches 5

3.0 TECHNICAL REQUIREMENTS 6
3.1 General Requirements 6
3.1.1 Description of Typical Transfer Line Assemblies 6
3.1.2 Description of Intermediate Transfer Line Assemblies 6
3.1.3 Description of Hose Jumper Assemblies 6
3.1.4 General Design Criteria 6
3.2 Functional Characteristics 7
3.2.1 Rated Working Pressures 7
3.2.2 Burst Pressure Ratings 7
3.2.3 Tensile Strength Requirements 7
3.2.4 Process Temperature Rating 7
3.2.5 Heat Trace Requirements 8
3.2.6 Ambient Environment Conditions 8
3.2.7 Static Dissipation 8
3.2.8 Chemical Compatibility 8
3.2.9 Service Life 8
3.3 Physical Characteristics 8
3.3.1 Length 8
3.3.2 Diameter 9
3.3.3 Bend Radius 9
3.3.4 Materials 9
3.3.5 End Fittings 9

3.3.6 Heat Trace 10
3.3.7 Insulation....11
3.4 Other Requirements 11
3.4.1 Workmanship....11
3.4.2 Cleanliness 11
3.4.3 Identification and Marking 12
3.4.4 Welding Requirements....12

4.0 INSPECTION, TEST, AND QUALITY ASSURANCE REQUIREMENTS 13
4.1 General Requirements....13
4.1.1 Verification by Inspection....13
4.1.2 Verification by Engineering Evaluation 13
4.1.3 Verification by Test 13
4.1.4 Nonconformance Reporting....13
4.1.5 Measuring and Test Equipment 14
4.2 Inspection Requirements....15
4.2.1 Dimensional Inspection 15
4.2.2 Visual Inspection 15
4.3 Engineering Evaluation Requirements 15
4.4 Test Requirements 15
4.4.1 Design Qualification Tests....16
4.4.2 Hose Lot Qualification Tests 19
4.4.3 Lot Testing 1 1/2" HIHTL ERSS....20
4.4.4 Individual Acceptance Tests 20

5.0 DOCUMENT SUBMITTALS....21
5.1 Submittal Requirements....21
5.2 Approval of Submittals....22
5.3 Submittals with Proposal 23
5.4 Submittals Prior to Testing 23
5.5 Submittals Prior to Shipment....23

6.0 HANDLING, PACKAGING, AND DELIVERY 24
6.1 Preparation for Shipment 24
6.2 Storage Reel Requirements....24
6.3 Seller's Packaging and Shipping Standards....25
6.4 Hose Jumper Assembly Shipment 25

LIST OF APPENDICES

Appendix A – Sketches

Appendix B – Chemical Constituents and Fluid Properties of Waste to be Transferred

Appendix C – Generic "toc Master Submittal Register (msr)" Form (A-6005-317)

Appendix D – Minimum Proof Test Pressure for Conax Feedthrough to Substantiate Working Pressure Rating

LIST OF TABLES

Table 2-1, Summary of Sketches for Safety-Related and General-Service Items 5
Table 3-1, Safety-Related and General-Service Items 7

LIST OF TERMS

Abbreviations, Initialisms, and Acronyms

ASME	American Society of Mechanical Engineers
ASNT	American Society for Nondestructive Testing
ASTM	ASTM International
AWS	American Welding Society
BBI	Best Basis Inventory
BPVC	Boiler & Pressure Vessel Code
BTR	Buyer's Technical Representative
CAS	Chemical Abstract Service
CH2M HILL	CH2M HILL Hanford Group, Inc.
CMTR	Certified Material Test Report
CWEng	Certified Welding Engineer
DBBP	Dibutyl Butyl Phosphonate
EPDM	Ethylene Propylene Diene Monomer
ERSS	Extended Reach Sluicer System
FTP	File Transfer Protocol
HIHTL	Hose-in-Hose Transfer Line
HTFT	Heat Trace Feed Through
M&TE	Measuring and Test Equipment
MSR	Master Submittal Register
NAHAD	The Association for Hose and Accessories Distribution
NDE	Nondestructive Examination
NFPA	National Fire Protection Association
RMA	Rubber Manufacturers Association
RT	Radiographic Test
TBP	Tri-butyl Phosphate
TIC	Total Inorganic Carbon
TOC	Total Organic Carbon
TWINS	Tank Waste Information Network System
UT	Ultrasonic Test

Units

%	percent
°C	degrees Celsius
µCi/mL	microcuries per milliliter
°F	degrees Fahrenheit
µg/mL	microgram per milliliter
µm	micrometer (or micron)
’	foot
”	inch
°	degrees of arc
cP	centipoise
FNPT	female national pipe thread
g/cm-s	grams/centimeter second
kg	kilogram
kg/L	kilograms per liter
Kgal	kilogallon(s)
lbs	pounds
M	molar
mg/kg	milligram per kilogram
mg/L	milligram per liter
MNPT	male national pipe thread
mole/L	moles per liter
MΩ	mega ohms
NPT	national pipe thread
psig	pounds per square inch, gage
V	volts

1.0 SCOPE

This specification details the requirements for the design, fabrication, and testing of encased transfer lines and hose jumpers intended to convey liquid radioactive waste from underground storage tanks in support of U.S. Department of Energy, River Protection Retrieval program goals.

1.1 GENERAL DESCRIPTION

1.1.1 Transfer Lines

The finished Hose-In-Hose Transfer Line (HIHTL) assemblies to be supplied in accordance with this specification shall consist of a flexible primary hose installed within a secondary encasement hose. The intent of the secondary encasement is to confine fluids resulting from any potential leak in the primary line, and convey this fluid to an existing pump pit or valve pit for leak detection. The primary or secondary hose shall be wrapped with heat tape. As designs dictate, a HIHTL heat trace feed through (HTFT) assembly may be interposed in between lengths of HIHTLs, which is also supplied in accordance with this specification. The secondary encasement shall be covered with insulation as defined in the procurement documentation.

1.1.2 Non-Metallic Flexible Hose Jumpers

The finished non-metallic flexible hose jumper assemblies (hose jumpers) to be supplied in accordance with this specification shall consist of a flexible hose identical to those used for primary hoses in HIHTL assemblies, and may include steel pipe, American Society of Mechanical Engineers (ASME) B31.3[1]-listed/qualified pipe fittings, thermocouples, heat tape and insulation as defined in the procurement documentation. Hose jumpers are intended to be installed inside structures.

1.1.3 End Fittings

End fittings are piping components that are attached to the raw hose via Swaging, Crimping, or Internal Expansion, as defined in Chapter 5 of the Rubber Manufacturers Association (RMA) IP-2, *Hose Handbook*:

> *<u>Swaged-on</u> – This type of coupling is applied by using special equipment to "swage" a ferule on to the outside of the hose. "Swaging" is defined as squeezing the ferule by passing it lengthwise into a spit die. This type of coupling is often used with thermoplastic hose.*
>
> *<u>Crimped-on</u> – This type of coupling is applied by crimping or compressing it radially by a number of fingers moving toward the hose axis. This coupling attachment method is versatile since crimped assemblies can be made with low-pressure hose, as well as high-pressure hydraulic hoses.*
>
> *<u>Internally Expanded Full Flow Couplings</u> – This type of coupling is used in applications where full flow is required such as oil, gasoline, chemical, and food transfer hose. The coupling is attached by passing an expander through the I.D. of the shank. This expands the shank, thus providing compression of the hose wall to aid in coupling retention while achieving full flow characteristics.*

[1] ASME B31.3, *Process Piping.*

Requirements of this specification apply to end fittings. Assemblies shall be fitted with appropriate end fittings. Fittings shall allow field testing or flushing of the secondary encasement hose.

End fittings shall be successfully tested per this specification.

Primary and/or secondary hoses not requiring end fittings shall be protected in such a way to prevent injury from handling the hose and prevent damage to the ends of the hose.

1.1.4 End Connections

End connections are piping components that attach to the end fittings (e.g., HIHTL HTFT assemblies). End connections do not contain or directly attach to the raw hose. End connections are provided at the request of the Buyer to connect HIHTL to equipment or other HIHTL. End connections shall be designed, fabricated, and tested to ASME B31.3 for Normal Fluid Service.

1.2 WORK INCLUDED

The Seller shall perform all activities in accordance with this specification; TFC-ENG-STD-21, "Hose-in-Hose Transfer Lines"; contract requirements; RPP-RPT-42153, *Safety-Significant Hose-in-Hose Transfer Line (HIHTL) Systems Functions and Requirements Evaluation Document*; and the Seller's established manufacturing procedures.

1.2.1 Component Manufacture

The Seller shall procure and fabricate materials and components in accordance with this specification.

1.2.2 Qualifications and Training

The Seller shall provide documentation of the following to the Buyer for approval (prior to award) per Section 5.0:

1.2.2.1 Hose Product Seller Documentation

The hose product Seller shall provide the following documentation to the Buyer for approval:

- The Seller shall be a listed member (Distributor) of the Association for Hose and Accessories Distribution (NAHAD).
- The Seller shall have at least one lead assembler recognized by NAHAD for design and fabrication of industrial hose by successfully completing and receiving a Certificate of Completion for their design and fabrication of industrial and composite hose exam.
- The Seller shall have a minimum of three years of experience in the design, fabrication, and assembly of chemical hoses, fittings, and assemblies (hose and fittings) and previous sales of a minimum of five applications of a chemical hose assembly.

1.2.2.2 End Connection Product Seller Documentation

The end connection product Seller shall provide the following documentation to the Buyer for approval:

- The Seller shall have a minimum of three years of experience in the design, fabrication, and assembly of piping components, pipe fittings, and/or piping assemblies and previous sales of a minimum of two applications of chemical hose end connection assemblies.

1.2.3 Transfer Line and Hose Jumper Assemblies

The Seller shall assemble, to the extent specified herein, the various Buyer-supplied and Seller-supplied equipment and fabricated components required for final transfer line and hose jumper assemblies.

1.2.4 Evaluation, Inspection, and Test

The Seller shall perform all evaluations, inspections, and tests required by this specification except those tests specified to be performed by the Buyer.

1.2.5 Document Submittal

The Seller shall prepare and submit documentation as specified in Section 5.0 of this specification.

1.2.6 Shipment

The Seller shall prepare the various components and assemblies specified herein for shipment, and ship to a location designated by the Buyer.

1.3 WORK NOT INCLUDED

The following activities shall be performed by the Buyer and are not within the scope of this specification.

1.3.1 Field Installation

The Buyer, at the Buyer's facility, shall perform installation of the HIHTL and/or hose jumper assemblies.

1.3.2 Buyer-Performed Tests

The Buyer shall perform specific tests in order to classify certain parts of the HIHTL and hose jumper assemblies to perform safety functions at a nuclear facility.

2.0 APPLICABLE DOCUMENTS

The following documents, of the exact issue shown, form a part of the basis of design to the extent specified in the applicable sections of this document and establish the Code of Record. In the event of a conflict between documents referenced herein and the requirements of this specification, the requirements of this specification shall take precedence.

2.1 GOVERNMENT DOCUMENTS

10 CFR 436, Title 10, "Energy," *Code of Federal Regulations*, Part 436, "Federal Energy Management and Planning Programs," as amended

10 CFR 830, "Nuclear Safety Management," *Code of Federal Regulations*, as amended

10 CFR 835, "Occupational Radiation Protection," *Code of Federal Regulations*, as amended

10 CFR 851, "Worker Safety and Health Program," *Code of Federal Regulations*, as amended

42 U.S.C. 15801, Title 42, "The Public Health and Welfare," *United States Code*, Chapter 149, "National Energy Policy and Programs," Section 15801, "Definitions," as amended

2.2 NON-GOVERNMENT DOCUMENTS

ASNT SNT-TC-1, *Recommended Practice for Personal Qualification and Certification in Nondestructive Testing*, American Society for Nondestructive Testing (ASNT), Columbia, Ohio

ASME B1.20.1, 1983, *Pipe Threads,* American Society of Mechanical Engineers, New York, New York

ASME B16.5, 1998, *Pipe Flanges and Flanged Fittings,* American Society of Mechanical Engineers, New York, New York

ASME B31.3, 2016, *Process Piping,* American Society of Mechanical Engineers, New York, New York

ASME BPVC, 2017, *Boiler and Pressure Vessel Code (BPVC),* American Society of Mechanical Engineers*,* New York, New York

ASME-NQA-1, 2008, with 2009 Addenda, *Quality Assurance Requirements for Nuclear Facility Applications,* American Society of Mechanical Engineers, New York, New York

ASTM D380, 1994, *Standard Test Methods for Rubber Hose,* ASTM International (ASTM), West Conshohocken, Pennsylvania

ASTM D991, 1989, *Standard Test Method for Rubber Property – Volume Resistivity of Electrically Conductive and Anti-Static Products,* ASTM International, West Conshohocken, Pennsylvania

AWS D1.6, 2017, *Structural Welding Code – Stainless Steel*, American Welding Society (AWS), Miami, Florida

NAHAD 500, 2005, *Industrial Hose Assembly Specification Guidelines*, The Association for Hose and Accessories Distribution, Annapolis, Maryland

NAHAD 600, 2005, *Composite Hose Assembly Specification Guidelines*, The Association for Hose and Accessories Distribution, Annapolis, Maryland

NFPA 70®[2], 2014, *National Electrical Code®[2],* National Fire Protection Association®[2] (NFPA®[2]), Quincy, Massachusetts

RMA IP-2, 2003, *Hose Handbook,* Rubber Manufacturers Association, Washington, D.C.

[2] NFPA 70, National Electrical Code, and National Fire Protection Association are registered trademarks of the National Fire Protection Association, Quincy, Massachusetts.

2.3 NON-GOVERNMENT NON-CODE OF RECORD DOCUMENTS

2.3.1 Documents

HNF-EP-0182, 2018 *Waste Tank Summary Report for Month Ending February 28, 2018*, Rev. 363, CH2M HILL Plateau Remediation Company, Richland, Washington

RPP-7756, 2001, *Engineering Test Plan for Testing Hose-in-Hose Design,* Rev. 0, CH2M HILL Hanford Corporation, Richland, Washington

RPP-14541, 2017*, Jumper Fabrication and Testing Specification for Tank Farms*, Rev. 8, Washington River Protection Solutions, LLC, Richland, Washington

RPP-19131, 2003, *Ultrasonic Deagglomeration in the 200 Series Retrieval*, Rev. 1, CH2M HILL Hanford Group, Inc., Richland, Washington

RPP-RPT-42153, 2017, *Safety-Significant Hose-in-Hose Transfer Line (HIHTL) Systems Functions and Requirements Evaluation Document*, Rev. 8, Washington River Protection Solutions, LLC, Richland, Washington

TFC-ENG-STD-21, 2017, "*Hose-in-Hose Transfer Lines*," Rev. D-11, Washington River Protection Solutions, LLC, Richland, Washington

TFC-ENG-STD-22, 2017, "*Piping Jumpers and Valves*," Rev. G-2, Washington River Protection Solutions, LLC, Richland, Washington

2.3.2 Sketches

The sketches identified in Table 2-1 are provided in Appendix A for information purposes to guide the vendor in fabrication, inspection, and test planning. Section 3.0 of this specification lists required functional characteristics for finished transfer line assemblies. The information depicted on these sketches does not necessarily reflect characteristics of the final design.

Table 2-1, Summary of Sketches for Safety-Related and General-Service Items

Sketch	Title
A	Typical HIHTL, Heat Trace on Primary
B	Hose Jumper
C	Primary Hose End Fittings
D	Primary Hose End Fittings Continued
E	4" Secondary Hose End Fittings
F	Typical Adjustable Union End Fittings
G	Hose Numbering System
H	Typical HIHTL Heat Trace Feed Through Assembly

3.0 TECHNICAL REQUIREMENTS

3.1 GENERAL REQUIREMENTS

3.1.1 Description of Typical Transfer Line Assemblies

Sketch A depicts the arrangement of typical HIHTL assemblies that will be utilized to transfer diluted waste between storage tanks and nearby pits. Finished assemblies shall be of nominal lengths and diameters specified in procurement documentation. The procurement documentation will contain a Buyer's part number for the primary and secondary assemblies. This Buyer's part number shall be used in lieu of the Seller's part number. Sketch G consists of the part number break down for the transfer line assembly. Sketches C and D and Section 3.3.5.1 depict the typical end fittings that shall be fitted to the ends of hoses on these assemblies.

3.1.2 Description of Intermediate Transfer Line Assemblies

Some transfer lines require an overall finished length greater than what may be fabricated from a single, continuous length of raw material. In this instance, multiple assemblies will be joined together at intermediate points. Assemblies for these lines shall be as depicted on Sketch A. These assemblies shall incorporate end fittings as described in Section 3.3.5.1 which allow hoses to be connected in the field (by the Buyer per Section 1.3.1). Assemblies shall be such that the end fittings of primary hoses can be pulled clear of secondary hose end fittings to allow make-up, then secondary hoses pulled together to allow make-up of the outer encasement joint, without damaging any components.

3.1.3 Description of Hose Jumper Assemblies

Hose jumpers are required to connect a transfer line to existing permanent transfer lines or other temporary transfer lines, pumps, and valve manifolds. Normally these connections are made within a pit. Hose jumpers utilize the flexibility, chemical, and physical resistance properties of the hoses used as primary hoses in transfer lines. The hose jumpers will be located inside a structure making secondary encasement unnecessary. However, heat trace and insulation may still be required for freeze protection or to minimize the chance of plugging. Sketch B depicts the standard configuration for a hose jumper. Sketch C and Section 3.3.5.3 depict typical end fittings attached to the ends of hose jumpers on these assemblies.

3.1.4 General Design Criteria

Transfer line and hose jumper assemblies shall be designed in accordance with the applicable general design criteria of RMA IP-2. End fittings and connections shall be designed in accordance with the applicable general design criteria in ASME B31.3.

The Seller shall provide pedigree documentation with full traceability of all safety-related equipment. This includes items purchased from evaluated suppliers as well as those commercial grade dedicated.

Table 3-1 identifies which items the Buyer has deemed safety related and general service:

Table 3-1, Safety-Related and General-Service Items

Safety Related	General Service
Primary Hose	End Fitting Set Screws
Secondary Hose	Secondary Seals and Gaskets
Primary End Fittings	Secondary Nuts and Bolts
Secondary End Fittings	Insulation
Primary O-rings on End Fittings	Heat Trace
HIHTL HTFT Assemblies	

3.2 FUNCTIONAL CHARACTERISTICS

The following functional characteristics are required for the entire HIHTL and/or hose jumper assembly including the individual hoses, heat tracing, insulation, and end fittings.

3.2.1 Rated Working Pressures

The maximum rated working pressure for primary hose assemblies shall not be less than 425 psig for a 2” hose, not less than 450 psig for a 1 1/2” hose, and not less than 500 psig for a 1” hose. The maximum rated working pressure for secondary hose assemblies shall not be less than 170 psig. All primary and secondary hose assemblies shall withstand vacuum to -6” of water column without collapse.

3.2.2 Burst Pressure Ratings

The burst pressure for primary hose assemblies, as determined by the methods identified in Section 4.0 of this specification, shall be not less than four times the rated working pressure, or 1,700 psig for 2” hose assemblies, 1,800 psig for 1 1/2” hose assemblies, or 2,000 psig for 1” hose assemblies. The burst pressure for secondary hose assemblies shall be not less than five times the maximum rated working pressure, or 850 psig.

The burst pressure for 1 1/2” hose assemblies in the Extended Reach Sluicer System (ERSS) shall be at least 1,600 psig (four times the process hose design pressure of 400 psig).

3.2.3 Tensile Strength Requirements

Primary and secondary hose assemblies shall be capable of withstanding an axial load equal to the weight of the hose when filled with a fluid having a specific gravity of 1.5, times a load factor of 2.25, without rupturing the hose. For worst-case scenario, lifting of the maximum length of a single piece of transfer line (380’, disconnected jointed line[3]), the requirements convert into 3,140 lbs for the 2” primary hose assembly, 2,130 lbs for the 1 1/2” primary hose assembly, 1,220 lbs for the 1” primary hose assembly, and 10,240 lbs for the 4” secondary hose assembly.

3.2.4 Process Temperature Rating

Primary and secondary hose assemblies shall be suitable for use at process fluid temperatures up to 180°F.

[3] See applicable design drawings for tensile strength requirements for HIHTL segments longer than 380’.

3.2.5 Heat Trace Requirements

Transfer line and hose jumper assemblies shall incorporate heat trace as necessary for freeze protection or to prevent the process fluid from cooling significantly (specific heat tracing requirements are contained in Section 3.3.6 of this specification). The exterior surface of either the primary or secondary hose (to be specified in the procurement documentation), and any appurtenant over-wrap required for dissipation of static charges, shall be suitable for direct continuous contact with specified heat tracing (155°F contact temperature).

3.2.6 Ambient Environment Conditions

Primary and secondary hoses, and any insulation or heat tracing, shall be suitable for installation in an outdoor environment, in direct contact with soil, shaded from direct sunlight, with an ambient temperature range of –25°F to 120°F, with temperatures up to 180°F inside structures.

3.2.7 Static Dissipation

Both primary and secondary hoses shall be manufactured in such a manner as to prevent the buildup of static charge between the two during their assembly, installation, operation, and dismantling. The use of anti-static rubber products meeting the definition included in ASTM D991 (resistance between 10^4 and 10^{11} ohms) or Buyer-approved equivalent is required for inner and outer surfaces of the secondary encasement hose, and for the outer surface of the primary hose.

3.2.8 Chemical Compatibility

Materials of construction shall be compatible with the specified waste and conditions in Appendix B. Material selection, design, and fabrication shall maximize the useful service life of finished assemblies towards a service life goal of three years while complying with the detailed requirements of this specification.

3.2.9 Service Life

The Seller shall specify the maximum shelf life, and submit technical justification to determine a service life, which can be expected for finished assemblies in the engineering evaluation data submitted per the requirements of Section 5.0. The service life shall consider exposure to chemical constituents, radiation dosage, temperature, and pressure, while continuing to meet the technical requirements of Section 3.0. The Seller shall not provide materials that have less than 75% of total shelf life available at the time of shipment (Example: If the shelf life of a product is seven years, then the Seller shall not provide materials with more than 21 months of shelf life used prior to shipment).

3.3 PHYSICAL CHARACTERISTICS

3.3.1 Length

The nominal length of finished assemblies shall be as specified in procurement documentation issued to acquire assemblies which conform to this specification. Critical dimensions and tolerances required for interface connections on either end of each assembly shall be as noted on Sketches A and B. Transfer lines, which span distances greater than 380’, shall be made up of multiple jointed HIHTL and hose jumper assemblies. Each assembly shall be fitted with end

fittings as depicted in the arrangement on Sketch A. For jointed assemblies, end fittings shall be as specified in procurement documents to allow interface of adjoining segments.

3.3.2 Diameter

Primary hoses shall have a nominal inside diameter of 2”, 1 1/2”, or 1”. Secondary hoses shall have a nominal inside diameter of 4”. Hoses shall accommodate the end fittings for primary and secondary end fittings depicted on Sketches C, D, E, and F.

3.3.3 Bend Radius

Final assemblies, incorporating the insulation and heat tracing specified elsewhere in this document, shall be capable of being bent about a 16” radius without damage or buckling.

3.3.4 Materials

Both primary and secondary hose tube material shall be ethylene propylene diene monomer (EPDM), or Buyer-approved alternative, meeting the chemical compatibility requirements of this specification. Materials used in the construction of assemblies shall meet the functional characteristics defined in Section 3.2. Braiding for reinforcement shall be provided as necessary to meet the pressure and tensile strength requirements identified for the hoses in Sections 3.2.1, 3.2.2, and 3.2.3. Reinforcement material shall be fully encapsulated. If components and/or materials not specified in this document are to be used, the change shall be submitted to the Buyer for approval with the proposal.

3.3.5 End Fittings

All end fittings shall be fabricated from austenitic stainless steel conforming to an ASTM standard with a Certified Material Test Report (CMTR). End fittings shall be attached to the raw hose via swaging, crimping, or internal expansion, as defined in Section 1.1.3. Attachment methods between hoses and end fittings shall comply with the functional characteristics in Section 3.2. Sketches for hose assemblies and end fittings are typical.

3.3.5.1 End Fittings – Typical Transfer Lines

A typical HIHTL primary hose end shall be fitted with a ChemJoint™[4] coupling by Campbell Fittings, Inc. of Boyertown, Pennsylvania, or other Buyer-approved fitting.[5] All threaded connections are as depicted in Sketch C, Detail 1 or 2. To prevent buckling and wear of the primary hose as it extends past the secondary hose, the primary hose may be fitted with end fittings as depicted in Sketch D, Detail 1 or 2. A locking mechanism to prevent the nuts from backing off shall be supplied for each primary hose end fitting.

The secondary hose shall be fitted with a fitting assembly as described in Section 1.1.3 and one of the following end assemblies:

- A 4” x 6” concentric reducer and a Raised Face Weld Neck Flange per ASME B16.5, Class 150, Material Group 2.1 or 2.2 as depicted in Sketch E, Detail 1.

[4] ChemJoint is a trademark of Campbell Fittings, Inc., Boyertown, Pennsylvania.

[5] It should be noted that the Campbell fitting used for hose and fittings are not the standard fitting in Campbell’s catalog. These fittings are specifically designed and built as a proprietary fitting by Campbell for one of the hose manufacturers to meet ASME B31.3 unlisted component qualifications.

- A 4" NPT male thread as depicted in Sketch E, Detail 2.
- A 4" adjustable union such as the typical one depicted in Sketch F, Detail 1, allowing access to the inner hose to secure the connections.
- A 4" adjustable union such as the typical one depicted in Sketch F, Detail 2, allowing access to the inner hose to secure the connections.

Distance between primary and secondary hose end fittings shall conform to critical dimensions depicted on Sketch A (dimensions apply to the threaded union in the "closed" position).

3.3.5.2 Not Used

3.3.5.3 End Fittings – Hose Jumpers

Hose jumper assembly is depicted in Sketch B. The hose jumper ends may be fitted with a male or female connector such as a threaded ChemJoint as depicted in Sketch C, Detail 1 or 2 or a Schedule 40 pipe stub for attachment to Buyer's fitting. If a ChemJoint, or other thread type of end connection is used, a locking mechanism to prevent the nuts from backing off shall be supplied for each hose jumper end fitting.

3.3.5.4 Not Used

3.3.5.5 End Connections – Heat Trace Feed Through Assembly

When jointed HIHTLs are connected where heat trace is applied to the primary hose, the HTFT assembly may be used to connect the heat trace to electrical power. The HTFT (illustrated in Sketch H) has two 6" flanges that are used for connection of HIHTLs having a 2" primary hose and a 4" secondary hose that terminates with a 6" weld neck flange. The 8" flange of the HTFT assembly is used for the routing of the heat trace through a power lead sealing gland (i.e., "feedthrough") component.

3.3.6 Heat Trace

In order to protect the fluids from freezing or to minimize the heat loss from the fluids to be conveyed in HIHTLs and hose jumpers, they may be fitted with heat tracing as specified in procurement documentation. One or more wraps of self-regulating electrical heat trace may be applied in a helical manner around the exterior of the specified hose. **Note**: A wrap ratio of 1.0 (length of heat trace per lineal foot of hose) as indicated in the part number shall mean to apply the minimum amount of heat trace that still allows full flexibility of the hose. If ratio greater than 1.0 is required to achieve full hose flexibility, submit actual ratio. Each wrap shall be overlaid by a wrap of conductive copper tape at least 2 1/2" wide and a wrap of at least 4" EPDM tape with butyl-based adhesive (i.e., American Group part #36101). All Heat tracing components shall be certified for use in hazardous locations per Class 1, Division 2, Group B, as defined by Article 500.5 (B)(2) of NFPA 70. The heat trace shall be Raychem®[6] BTV Self-Regulating Heating Cables.

Install a Raychem Heat Trace End Seal Kit, Model PMK-HSE2, or Raychem End Seal Kit, Model E-150, on one end of the applied heat trace. The other end shall be left accessible for future connection to a Buyer-supplied control box. Heat tracing shall be applied and extend past each end of the hose as specified in Sketches A and B, to allow for field installation and

[6] Raychem is a registered trademark of Tyco Electronics Corporation, Berwyn, Pennsylvania.

wrapping of end connections. If required, Raychem splice kit S-150 or PMKG-LS may be used with Buyer's approval.

Apply Heat Trace Raychem warning labels on the outside of the HIHTL at each end and at intervals of no less than 10' over the entire length of the HIHTL. A minimum of three labels shall be installed around the circumference of the HIHTL, at each interval, to assure the warning labels are visible.

3.3.7 Insulation

Assemblies may require insulation in order to minimize heat loss during operation. Where required, the secondary hose of each transfer line shall be fitted with insulation as specified in procurement documentation consisting of Armaflex®[7] Type AP as manufactured by Armacell®[7]. Hose jumpers shall be fitted with insulation consisting of either Armaflex Type AP as manufactured by Armacell or a ceramic fiber blanket covered and secured with fiberglass fabric impregnated with silicone rubber, as specified in procurement documentation. Insulation shall be installed in accordance with the manufacturer's instructions. It shall terminate at the distances from each end indicated on Sketch A. Insulation exterior shall be finished as is warranted to comply with the environmental requirements included in Section 3.2.6.

3.4 OTHER REQUIREMENTS

3.4.1 Workmanship

All sharp edges should be broken to ensure no hazard exists to field operators. Machined surfaces on Buyer-supplied end connections and fittings shall be protected from damage during fabrication, assembly, test, and preparation for shipment. All parts and assemblies shall be free of dirt, chips, scale, or other debris, and shall reflect good general workmanship. Grinding or machining of stainless steel shall be done with tools that have never come in contact with materials other than stainless steel. Wire brushing of stainless steel shall be done with stainless steel brushes that are new or have never been used on materials other than stainless steel. Use of compounds containing chlorides is prohibited. Fabricating tolerances, fits, and clearances shall conform to industry standard requirements for parallelness, flatness, and overall dimensions. Critical dimensions subject to inspection are noted on Sketches A and B.

3.4.2 Cleanliness

Before assembly, and prior to preparing for shipment, all components shall be clean to the extent that extraneous materials, such as those listed below, are not present:

- Metallic or other dusts (shop dust), chips, and turnings
- Abrasive particles
- Rust and other loose corrosion products
- Magnetic/liquid penetrant residues, dye check, etc.
- Foreign material, such as paper, plastic, and wood
- Cutting oils
- Excess lubrication grease and oil
- Marking dyes

[7] Armaflex and Armacell are registered trademarks of Armacell Enterprise GmbH, LLC, Münster, Germany.

3.4.3 Identification and Marking

Each end of a HIHTL assembly and its shipping spool shall be permanently marked using paint or a securely affixed metal tag with the following data shown:

- Manufacturer
- Raw hose date of manufacture
- Buyer's purchase order number
- Buyer's specification number and revision
- Serial identification number
- Hose and spool weight
- Shelf life
- Hose length
- Heat trace type and wattage
- Heat Trace End Seal Kit model number
- Heat Trace Splice Kit model number (if used)
- Seller's date of assembly

Marking of the assemblies shall be visible without having to remove insulation or heat trace installed about assemblies.

Marking on individual items, such as the end fitting components, shall be uniquely identified to include heat, batch, or lot number and component part number.

3.4.4 Welding Requirements

3.4.4.1 Welder and Welding Procedure Qualifications

Welders and weld procedures shall be qualified per ASME BPVC IX. Welding for all pressure-retaining welds shall conform to the fabrication requirements specified in ASME B31.3, Chapter V, for normal fluid service for the design pressure, temperature, and fluid properties specified elsewhere in this document. The Seller is responsible for ensuring that any subcontractors they use meet the welding requirements of this specification.

3.4.4.2 Welding Inspection Requirements

Inspection and examination of all pressure-retaining welds associated with HIHTL assemblies shall be performed in accordance with the requirements of ASME B31.3 specified for normal fluid service. Volumetric examination [radiographic test (RT) or ultrasonic test (UT)] of welds where specified by ASME B31.3 shall be performed where possible (i.e., in-process examination shall not be specified). In those cases where volumetric examination is not possible (e.g., orientation of the weld), the subject welds shall have documented in-process examination in accordance with ASME B31.3, paragraph 344.7, with liquid penetrant or magnetic particle examination specified for the root pass [see paragraph 344.7.1(e)] and shall be identified as such on the fabrication drawings. Fabrication drawings shall be approved by Tank Operations Contractor Engineering prior to fabrication. The determination of whether a volumetric inspection is possible shall be made by an AWS Certified Welding Engineer (CWEng), a ASNT SNT-TC-1 Level III (RT and UT) nondestructive examination (NDE) examiner, or a SNT-TC-1 Level II (RT and UT) NDE examiner. Individual items described in paragraph 344.7.1 shall be documented (e.g., checklist format) for each in-process examination. The in-process

examinations shall not be used to meet the required representation of the welder's or the welding operator's work unless necessary to meet the required representation of work.

The extent of examination specified in paragraph 341.4.1 b (1) of ASME B31.3 shall be 100% of circumferential butt and miter groove welds in primary hose assembly fittings. Encasement hose fitting welds shall have 100% liquid penetrant examination of pressure-retaining welds in addition to examinations required by ASME B31.3.

Weld records, weld inspection records, and weld maps shall be prepared and submitted. Radiographic film shall be traceable to the specific weld connection and included as a formal submittal.

4.0 INSPECTION, TEST, AND QUALITY ASSURANCE REQUIREMENTS

4.1 GENERAL REQUIREMENTS

Hose-in-hose transfer lines, hose jumper assemblies, and the power lead sealing gland component of the HIHTL HTFT assembly are subject to verification of compliance with the requirements of this specification. One or a combination of three methods–inspection, engineering evaluation, and test–shall verify compliance. The Seller is responsible for performance of the requisite inspections, evaluations, and tests, and shall submit supporting documentation as required by Section 5.0.

4.1.1 Verification by Inspection

The inspection method of verification shall be defined as visual or other means of determining that the requirement was achieved. It can include standard measurement or laboratory instruments to achieve the required accuracy of the inspection.

4.1.2 Verification by Engineering Evaluation

The engineering evaluation method of verification shall be defined as an evaluation of design approaches or comparison of requirements to the design that cannot be analyzed by established standards/assumptions. The use of engineering evaluation requires the concurrence of the Buyer to establish if the requirement has been met.

4.1.3 Verification by Test

Testing shall consist of qualification tests which verify the design and materials selected for use in transfer line and hose jumper assemblies and verify the pressure design of the HTFT's power lead sealing gland component. It shall also consist of individual acceptance testing to verify each assembly meets specific acceptance criteria. Test plans and procedures, and their results shall be submitted and approved as indicated in the requirements of Section 5.0. Tests not identified in this specification but are deemed necessary by the Seller, shall not be required to be reviewed by the Buyer. Seller is not required to provide submittals for tests to be performed by the Buyer. Buyer-performed tests may happen before, during, or after manufacture and assembly. Seller shall accommodate the Buyer to perform tests required in Section 4.4.

4.1.4 Nonconformance Reporting

The Seller shall develop and utilize a procedure for reporting results of inspection, test, or/and evaluations of assemblies that fail to conform to the requirements of this specification. The

Seller shall advise the Buyer's Quality Assurance and Procurement representatives as soon as practicable after the identification of any nonconformance. Reporting shall be by means of a written report. The report shall indicate one of four possible dispositions:

1. Reject – The item or component is to be replaced with an acceptable item or component that meets original requirements.
2. Rework – The item or component is made to conform to original requirements by completion or correction.
3. Repair – The characteristics of the item or component are restored to a condition such that the capability of the item or component to function reliably and safely is unimpaired, even though the item or component still does not conform to the original requirement.
4. Use-As-Is (Accept-As-Is) – The item or component is satisfactory for its intended use without rework or repair, even though the item or component still does not conform to the original requirement.

Dispositions of Use-As-Is or Repair proposed by the Seller shall be approved by the Buyer before the Seller implements the disposition.

4.1.5 Measuring and Test Equipment

Measuring and testing tools, gauges, portable or installed process instruments, and other measuring and testing devices used for process monitoring, data collection, inspection, and testing shall be calibrated and adjusted at specified intervals, as required, to maintain their accuracy within specified limits. Calibration shall be performed using standards traceable to the National Institute of Standards and Technology or other nationally recognized standard. If no standard applies, then a method that gives an acceptable basis for the calibration will be developed. In addition to these basic requirements, procedures for control and calibration of measuring and test equipment (M&TE) shall include the following requirements.

- M&TE shall be accurate to within 2.5% of full scale. Analog and digital equipment shall have overall test ranges of no more than 5 times and 15 times (respectively) of the desired result. Accuracy and range shall be appropriate for each test.
- When M&TE is found to be out of tolerance during use or during the calibration process, a documented evaluation shall be conducted commensurate with the significance of the circumstances including a determination of the validity of measurements made with that instrument and any potential impact on resultant process data, scientific data, inspection/test results, and the acceptability of items/data. *Seller shall immediately notify the Buyer if any assemblies were manufactured with equipment found to be out of calibration. Seller shall provide Buyer with documentation upon request regarding use of affected assemblies.*
- M&TE calibration records, including manufacturer's data, shall be maintained.

The above requirements do not apply to standard commercial devices such as rulers, tape measures, and levels as long as they provide the required accuracy in the environment in which they are used.

4.2 INSPECTION REQUIREMENTS

The transfer line or hose jumper assembly and components are subject to inspection at the Seller's facility or Seller's subcontractor's facility by a Buyer's Quality Assurance or Engineering representative. Seller shall notify Buyer at least three working days in advance of the time items will reach any Inspection Hold Point established by the Buyer in the procurement package.

The Seller shall prepare a Buyer-approved inspection record that will formally document Seller inspection of the assembly per the requirements of this specification. Inspection records shall require that the person performing the inspection initial and date the form at each inspection point. The Seller's designated representative shall sign and date the record of inspection when completed. The Buyer may witness inspections at the Buyer's discretion.

4.2.1 Dimensional Inspection

Inspection and verification of primary and secondary hose inside diameter, length, and critical dimensions noted on Sketches A and B are required.

4.2.2 Visual Inspection

Visual inspection shall be performed to verify the proper installation of insulation and heat tracing in conformance with the physical characteristics detailed in Section 3.3. Visual inspection shall also verify compliance with cleanliness, workmanship, and marking requirements.

4.3 ENGINEERING EVALUATION REQUIREMENTS

The following characteristics shall be verified by engineering evaluation, with basis of compliance submitted for Buyer's concurrence as indicated in Section 5.0. Characteristics evaluated for compliance include:

- Resistance to ambient environmental conditions specified in Section 3.2.6;
- Static dissipative properties required in Section 3.2.7;
- Chemical compatibility requirements of Section 3.2.8;
- Design life requirements of Section 3.2.9; and
- Materials requirements of Section 3.3.4.

4.4 TEST REQUIREMENTS

Manufacture and design characteristics of the HIHTLs, the hose jumper assemblies, or the HTFT sealing gland components shall be verified by qualification or individual acceptance tests. Tests shall be performed by the Seller's qualified personnel in accordance with Buyer-approved procedures. Tests may be witnessed by the Buyer's Engineering or Quality Assurance representative at the Buyer's discretion. At least five days' notice shall be provided prior to the performance of any test. Test procedures and acceptance criteria shall be as specified, and test methods shall be in accordance with the general requirements of ASTM D380. Procedures and results shall be submitted in accordance with the requirements of Section 5.0.

Data sheets shall indicate if any test exceptions or comments were noted during testing. Unexpected results during testing or technical changes to the test procedure shall be recorded in the Test Exceptions area for each test. Buyer shall be notified and approve of test exceptions prior to shipment.

4.4.1 Design Qualification Tests

Design Qualification tests shall be performed on each type of hose composition and construction (e.g., rubber liners and integrated wire wrap), the method of attaching end fittings (e.g., swaged), and on the minimum proof test pressure of the HTFT power lead sealing gland component's installation method. Design Qualification tests do not need to be re-performed, with Buyer approval, for hoses and sealing glands of composition and construction and methods of attaching end fittings and installing sealing glands *identical* to items previously accepted through these Design Qualifications tests. Any change to the hose or sealing gland composition and construction or method, of attaching end fittings, or of installing sealing glands requires the Design Qualification tests to be re-performed unless Buyer waives this requirement. The Seller shall notify the Buyer of the intent to change the composition, construction, the method of attaching end fittings, or the method of installing the sealing glands as soon as possible.

The Seller shall prepare procedures and conduct tests to demonstrate the design of the transfer line or hose jumper or sealing gland, the materials, and techniques utilized in their fabrication and assembly or installation comply with specification requirements. Design Qualification test requirements include verifying burst pressure, tensile strength of hose, performance at elevated temperature limits, ability to withstand vacuum, and tensile strength of hose and method of attaching end fittings as described in the sections below.

Coupons used for the following tests shall be fabricated from the same type of hose composition and construction. The mechanical connection between the test hose and the end fittings shall be installed in the same manner as those on the final hose assembly, the same type of end fittings described in Section 3.3.5.1 shall be used unless tested separately per Sections 4.4.1.6 and 4.4.1.7.

Insulation and heat trace of the test assemblies is not required. The Seller is responsible for procurement of the hose end connections and sealing of the ends as required to perform testing. Testing shall be performed in a fixture or configuration that ensures the safety of test personnel. The test hose and components shall not be used in any final hose assembly. End fittings may only be used if they have not been attached onto the test hose.

For jointed HIHTL designs, primary hose coupons shall contain a jointed connection and secondary coupons shall contain an adjustable union connection, described in Sketch F, unless the end connection is tested per Sections 4.4.1.6 and 4.4.1.7. If used, the end connections shall be joined per manufacturer's instruction.

4.4.1.1 Cycle, High Pressure - High Temperature Test

The Seller shall conduct a test on two coupons of the primary hose at varying pressures and varying temperatures, using water as a test media. Testing shall be performed with Seller-provided end fittings and joint installed. The test shall consist of a minimum of 300 cycles. Each cycle shall contain two parts and be performed as follows:

a) Run test media (170 to 180°F) through hose for five minutes. Stop flow and maintain at least:

- 425 psig for 1 minute for a 2" primary hose.
- 450 psig for 1 minute for a 1 1/2" primary hose.
- 500 psig for 1 minute for a 1" primary hose.

b) Run test media (80°F or less) through hose for 5 minutes. Stop flow and maintain at least:

- 425 psig for 1 minute for a 2" primary hose.
- 450 psig for 1 minute for a 1 1/2" primary hose.
- 500 psig for 1 minute for a 1" primary hose.

After performing at least 300 cycles, an internal pressure of at least 650-700 psig shall be established and maintained for no less than 12 hours while the internal temperature of the hose is maintained between 170°F to 180°F. Acceptance criteria shall allow no detectable leakage or degradation in performance as a result of exposure to these process conditions. One coupon shall be further used during the Burst Pressure Test (see Section 4.4.1.2), and the other coupon shall be further used during the tensile test (see Section 4.4.1.3).

4.4.1.2 Burst Pressure Test – Hose Coupons

The Seller shall conduct a burst test to destructively test primary and secondary hose coupons representative of the hose assembly described by this specification to verify that the minimum burst pressure criteria specified in Section 3.2.2 has been met. A sample coupon of primary hose material from the Cycle High Pressure - High Temperature Test (Section 4.4.1.1) shall be tested. The test fluid is to be water at ambient temperature.

4.4.1.3 Tensile Strength Test

The Seller shall conduct tests which characterize the tensile strength of the primary and secondary hoses (elongation vs. applied load). Axial loads shall be applied in a controlled manner, accurately recorded along with the associated change in length. A sample coupon of primary hose from the Cycle High Pressure - High Temperature Test (Section 4.4.1.1) shall be tested. Acceptance criteria shall be based on the minimum strength requirements of Section 3.2.3.

4.4.1.4 Vacuum Testing

The Seller shall test both primary and encasement hoses to verify they can withstand a vacuum without collapse. Each test shall consist of two sample coupons, with each coupon being from a different lot. Each test coupon is then subjected to an internal vacuum equal to or greater than that specified in Section 3.2.1. Hoses shall be deemed acceptable if they withstand such an internal vacuum without collapse.

4.4.1.5 Hose Growth Testing

The Seller shall conduct tests to measure primary hose growth due to expansion when the hose is pressurized. These tests will be performed on assemblies with the primary hose inserted in the secondary hose. These tests are for information purposes only and do not have results that must be met for acceptance purposes. Unlike the other Design Qualification tests, this test is not

required to be re-performed if the end fittings change, only if composition or construction of the hose changes.

4.4.1.5.1 Straight Assembly

The first of these tests shall be performed on a single hose or one or more jointed hoses, no less than 300' in length, which shall be laid as straight as possible without restraint. The primary hose will then be filled with 100°F to 120°F water and pressurized to the working pressure for at least ten minutes measuring and recording the primary hose growth at each end, and any observations of hose growth effects.

4.4.1.5.2 Assembly with One Bend at Each End

The second test shall be performed where the hose shall be laid straight except at points approximately 5' from each end of the assembly where a 90° bend (without exceeding the minimum bend radius specified by the manufacturer) will be made in the assembly and maintained while the primary hose is pressurized, heated, and measured as described in the Straight Assembly Hose Growth Test.

4.4.1.5.3 Assembly with Two Bends at Each End

The third test shall be performed where the hose shall be laid straight except at points approximately 5' and 10' from each end of the assembly where 90° bends (without exceeding the minimum bend radius specified by the manufacturer) will be made in the assembly and maintained while the primary hose is pressurized, heated, and measured as described in the Straight Assembly Hose Growth Test.

4.4.1.6 Encasement End Fitting Burst Pressure Test

A hydrostatic pressure test at or above the minimum burst pressure, specified in Section 3.2.2, shall be performed for at least ten minutes with no more than a ±2% change from the starting pressure. This test requirement may be fulfilled by attaching the end fitting to the hose coupon for the Hose Burst Pressure Test, Section 4.4.1.2.

4.4.1.7 Encasement End Fitting Tensile Strength Test

A tensile strength test to at least the minimum tensile load of the hose, per Section 3.2.3, shall be performed on an encasement end fitting design. This test requirement may be fulfilled by attaching the end fitting to the hose coupon for the Hose Tensile Strength Test, Section 4.4.1.3. This test may be waived with the Buyer's approval (e.g., if tensile stresses are bounded by stresses applied in other testing).

4.4.1.8 Crush, Rollover, and Impact Shear Testing

The hose assemblies shall be tested to verify that no credible crush loads or mechanical impacts can compromise the pressure integrity of the encasement hose. Load testing shall be performed on a firm base as described in TFC-ENG-STD-21, Section 3.4. After applying the load conditions, each test assembly primary hose and encasement hose shall be successfully tested to the rated working pressure of the hose.

4.4.1.9 Water Hammer Test

The Seller shall conduct tests to measure the effects of water hammer on a selection of primary hose with attached end fittings. The test shall consist of flowing water through a minimum 50' length of primary hose assembly at a minimum flow rate of 15' per second and inducing a water hammer by quickly closing an attached downstream valve and recording the maximum pressure and change in pressure. These tests are for information purposes only and do not have results that must be met for acceptance purposes.

4.4.1.10 Burst Pressure Test – Power Lead Sealing Gland Component

The Seller shall conduct a proof test of a representative installation of the power lead sealing gland (i.e., feedthrough) component (i.e., Conax®[8] Technologies Model PL-12, 3/4" MNPT) in the HTFT assembly's blind flange. This test shall be performed in accordance with the bursting test procedure of the ASME BPVC VIII, Division 1, UG-101(m). The alternative testing method in UG-101(m) shall be employed in which the test may be stopped at any pressure before rupture that will satisfy the requirements for the desired maximum allowable working pressure. UG-101's "maximum allowable working pressure" is taken to be the "maximum rated working pressure" of this specification. The minimum hydrostatic pressure at which point the testing may be discontinued is 985 psig to sufficiently substantiate the maximum rated working pressure of 170 psig for the secondary hose assemblies (see Appendix D and Section 3.2.1).

Note: Because the blind flange of the HIHTL HTFT assembly – as modified with the 3/4" FNPT hole – is manufactured and modified per ASME B16.5 Class 150 criteria (e.g., paragraphs 6.12.2 and 6.12.6, and Table II-6), it is an ASME B31.3 listed component per ASME B31.3, paragraph 303, and does not require substantiation of its pressure design per ASME B31.3, paragraph 304.7.2. In view of this conclusion, this testing is focused on the installation of the gland in a representative threaded plate. The gland is manufactured by Conax Technologies. However, in this qualification testing, requirements in UG-101 pertaining to "the Manufacturer" are to be understood to mean the testing facility organization that creates the test apparatus and performs the testing for this gland's installation. Given that neither the gland nor the HTFT assembly will be marked with an ASME certification mark or with a U or UM designator, associated ASME BPVC VIII requirements (general inspection and test requirements of UG-90, the quality control system requirements of Mandatory Appendix 10, etc.) should be considered to the extent appropriate using a graded approach.

4.4.2 Hose Lot Qualification Tests

The Seller shall prepare procedures and conduct tests to demonstrate the manufacture of the transfer line, the materials, and techniques utilized in the fabrication and assembly of hose assemblies complies with specification requirements. Hose lot qualification test requirements include verifying burst pressure, tensile testing, and performance at elevated temperature limits of coupons from each production lot.

Coupons used in the test assemblies shall be fabricated from the same lot of hose and type of hose fittings used in the final hose assemblies. The mechanical connection between the test hose and the end fittings shall be installed in the same manner as those on the final hose assembly. Insulation and heat trace of the test assemblies is not required. The Seller is responsible for

[8] Conax is a registered trademark of Conax Technologies, 2300 Walden Avenue, Buffalo, New York 14225.

procurement of the hose fitting, and sealing of the ends as required, to perform testing. Testing shall be performed in a fixture or configuration that ensures the safety of test personnel. The test hose and components shall not be used in any final hose assembly.

For primary and secondary hose coupons: Coupons for the following tests shall contain end fittings as described in Section 3.3.5.1.

4.4.2.1 Burst Pressure Test – Hose Coupons

The Seller shall conduct a burst test to destructively test primary and secondary hose coupons representative of the hose assembly described by this specification to verify that the minimum burst pressure criteria specified in Section 3.2.2 has been met. The test fluid will be water at ambient temperature unless otherwise specified.

4.4.2.2 Steady State, High Pressure - High Temperature Test

The Seller shall conduct a test of one coupon of the primary hose at elevated pressures and temperatures. Testing shall be performed with Seller-provided end fittings. An internal pressure of at least 600 psig shall be established and maintained for no less than 12 hours while the internal temperature of the hose is at a temperature of 170°F to 180°F using water as a test media. Acceptance criteria shall allow no detectable leakage or degradation in performance as a result of exposure to these process conditions.

4.4.2.3 Tensile Strength Test

The Seller shall conduct tests that characterize the tensile strength of the primary and secondary hoses (elongation vs. applied load). Axial loads shall be applied in a controlled manner, accurately recorded along with the associated change in length. A sample coupon from each production lot of primary and secondary hose shall be tested. Acceptance criteria shall be based on the minimum strength requirements of Section 3.2.3.

4.4.3 Lot Testing 1 1/2” HIHTL ERSS

4.4.3.1 ERSS 1 1/2” HIHTL Lot Testing

The 1 1/2” hose shall be burst tested by the hose manufacturer as specified in Section 4.4.2.1, while applying the maximum tension force at design temperature. This high temperature burst/tensile strength test needs to be performed three times per hose lot number and submitted along with required submittals as per Section 5.5.

- Sluicers with hoses qualified to 1,847 lbs of tensile force shall be tested at design temperature and a minimum of 1,847 lbs of tension.
- Sluicers with hoses qualified to 2,500 lbs of tensile force shall be tested at design temperature and a minimum of 2,500 lbs of tension.

4.4.4 Individual Acceptance Tests

The Seller shall prepare procedures and conduct tests on each HIHTL and hose jumper assembly manufactured in accordance with this specification to verify functional requirements are complied with. Final hose assembly shall be built in the same manner as the test coupons.

4.4.4.1 Proof Pressure Testing

4.4.4.1.1 Primary Hose

The Seller shall conduct a hydrostatic pressure test of the transfer line to verify the primary hose and end fittings are able to retain fluid up to and above the maximum operating pressure specified without leakage or damage. The 2" primary hoses shall be pressurized to between 800 psig and 850 psig, 1 1/2" primary hoses shall be pressurized to between 850 psig and 900 psig, and 1" primary hoses shall be pressurized to between 950 psig and 1,000 psig. These pressures shall be maintained for no less than 10 minutes. Test media shall be water at ambient temperature: record temperature of water. The Seller shall provide a means for mating with primary hose end fittings in order to conduct pressure testing.

4.4.4.1.2 Secondary Hose

The Seller shall conduct a hydrostatic pressure test of the transfer line to verify the secondary hose and end fittings are able to retain fluid up to and above the maximum operating pressure specified without leakage or damage. Secondary hoses shall be pressurized to between 400 psig and 425 psig. These pressures shall be maintained for no less than 10 minutes. Test media shall be water at ambient temperature, record temperature of water. The Seller shall provide a means for mating with secondary hose end fittings in order to conduct pressure testing.

4.4.4.2 Heat Trace Testing

The Seller shall conduct a Megger test of the heat trace after assembly (after primary hose inserted through the secondary or after heat trace is applied to the secondary and insulation is applied), at 500V, 1,000V, and 2,500V in accordance with heat trace manufacturer's recommendations to ensure heat trace has been installed without damage. Test is successful if the conductor insulation in the heat trace has a minimum of 1,000 MΩ resistance at each voltage.

4.4.4.3 End Fitting Testing

Seller shall conduct hydrostatic pressure tests of the end fittings to verify the ability to retain fluid up to the specified pressures without leakage or damage. The 2" primary hose end connections shall be tested between 800 to 850 psig, 1 1/2" primary hose end connections shall be tested between 850 to 900 psig, and 1" primary hose end connections shall be tested between 950 to 1,000 psig, Secondary hose end connections shall be tested between 400 to 425 psig. Test media shall be water at ambient temperature, record temperature of water. Pressure shall be maintained for no less than ten minutes.

4.4.4.4 Hose Jumper Assembly Testing

All the tests listed in Section 4.4 apply to hose jumper assemblies excluding those for secondary hoses.

5.0 DOCUMENT SUBMITTALS

5.1 SUBMITTAL REQUIREMENTS

The Seller shall submit the following documents (as a minimum) to the Buyer at the address specified in procurement documentation. Each submittal should be marked with this specification number, the contract order number, hose serial number, and the Seller's file

number. Three copies of each document submitted, along with a transmittal letter shall be forwarded to the Buyer. All of this information shall become the property of the Buyer.

Required submittals are identified and listed on the procurement Master Submittal Register (MSR). The MSR identifies the minimum submittals required by this specification and identifies when the submittals are required to be submitted in the procurement process. The MSR included with the purchase order will constitute the governing MSR. A generic MSR form is included in Appendix C.

Submittals shall be provided using the "Tank Operations Contractor Vendor Incoming Letter of Transmittal (ILOT)" (form A-6005-315). All transmittal subject headings shall contain, at a minimum, the subcontract number, submittal number identified by the MSR, and submittal description.

Submittals shall be provided in electronic format unless available only as a hard copy. Electronic submittals may be sent to TOCVND@rl.gov or delivered via a WRPS designated File Transfer Protocol (FTP) site. Electronic formats must be non-password protected in one of the following formats:

- Microsoft®[9] Office Compatible
- Portable Document Format (PDF)
- Tagged Image File Format (TIFF)
- Graphics Interchange Format (GIF)
- Joint Photographic Experts Group (JPEG)
- Windows Media Video (WMV)
- Moving Picture Expert Group (MPEG)
- Extensible Markup Language (XML)
- HyperText Markup Language (HTML)
- Comma Separated Values (CSV)
- Text (TXT)

All deliverable documentation shall be complete, accurate, legible, and reproducible. Before delivery, design media and documents shall be reviewed by qualified Subcontractor personnel for technical adequacy and appropriate content in accordance with the Subcontractor's Quality Assurance procedures. The Subcontractor shall attest, in writing, to the accuracy and completeness of the information contained in the final deliverables.

Deliverables shall be subject to approval by the Buyer's Technical Representative. Deliverables shall comply with this specification and technical basis documents and other requirements identified herein.

5.2 APPROVAL OF SUBMITTALS

Some Seller-supplied documents require approval by the Buyer. A submittal requiring approval which is not approved is identified as: 1) "Not Approved, Revise and Resubmit." The submittal is considered technically deficient, or incomplete, and therefore unacceptable. Resubmittal is required, and fabrication or procurement shall not proceed; or 2) "Approved with Exception."

[9] Microsoft is a registered trademark of Microsoft Corporation, Redmond, Washington.

Fabrication, assembly, or procurement may proceed and resubmittal is required to verify incorporation of the exception.

5.3 SUBMITTALS WITH PROPOSAL

The Seller shall submit qualifications and training, a planned fabrication, test, packaging, and shipping schedule, service life justification plan, and any specification deviation requests (including bases) with proposal.

5.4 SUBMITTALS PRIOR TO TESTING

The Seller shall submit the following documents to the Buyer for approval:

- Material of construction descriptions and certifications including documentation demonstrating qualification of hose material for use at the process, ambient, and heat trace contact temperatures specified in Section 3.0.
- Sample shop traveler.
- Sample inspection reports.
- End fitting installation procedure.
- Design Qualification Test Procedures and sample data sheets (as applicable).
- Hose Lot Qualification Test Procedures and sample data sheets (as applicable).
- Heat Trace Lot Qualification Test Procedures and sample data sheets (as applicable).
- Individual Acceptance Test Procedures and sample data sheets, Secondary Hose Proof Pressure Test and Heat Trace Tests (as applicable).
- Individual Acceptance Test Procedures and sample data sheets, Primary Hose Proof Pressure Test (as applicable).
- End fitting details which include materials of construction.
- Material of construction description, vendor certification of conformance, and a CMTR for the metallic body of the power lead sealing gland (HTFT),
- ASME B31.3 qualification analysis for any unlisted components used in the assembly.

5.5 SUBMITTALS PRIOR TO SHIPMENT

The Seller shall submit the following documents to the Buyer for approval:

- Certificates of Conformance. Seller shall provide Certificates of Conformance for each transfer line or hose jumper assembly supplied in accordance with this specification. These certificates shall indicate the conformance of supplied material with the requirements of this specification and any other technical requirements included in procurement documentation.
- CMTRs for all safety-related metallic components.
- Commercial Grade Dedication packages for any dedicated materials used during fabrication.
- Traceability and Pedigree documentation for all safety-related components.
- Engineering Evaluations (See Section 4.3).

- Test Results. Seller shall submit filled out data sheets recording results of required tests, including qualification tests and individual acceptance tests. Qualification proof test results for the power lead sealing gland installation shall be documented in a Proof Test Report consistent with ASME BPVC VIII, Division 1, UG-101(b), for a vessel or vessel part that is not to be marked with an ASME certification mark or an ASME U or UM designator.
- All anomalies and defects (e.g., indication of de-lamination, ply separation, cutting, bulging, etc.) shall be evaluated, documented, and submitted for Buyer approval.
- Dimensional and Visual Inspection Reports. Reports are to include total weight of finished assemblies.
- Weld record, weld maps, NDE and inspection reports including Radiographic film.
- Packaging, Handling, and Shipping Procedure/Instruction.
- Manufacturer's instructions for joining the threaded connections, and adjustable unions.

Note: Instructions for installing adjustable unions shall give the necessary directions to ensure the position of the sliding union makes a sufficient seal.

If any revision has been made to previously submitted items, the Seller shall resubmit updated versions of said items for approval, in addition to the items listed above. Shipment shall not be effected until all required documentation is submitted and approved, and the Buyer's Quality Assurance personnel have granted authorization to ship.

6.0 HANDLING, PACKAGING, AND DELIVERY

6.1 PREPARATION FOR SHIPMENT

Prior to preparing the assembly for shipment, both primary and secondary hoses shall be blown dry with oil free compressed air until no moisture is evident at the exit. Primary and secondary hose ends shall be covered to prevent the intrusion of moisture, contaminants, insects, rodents, dust, and dirt during shipment and storage. Primary hose ends shall be fitted with a device, which can be removed and replaced, to prevent the primary hose from slipping into the secondary hose during installation on the spool.

6.2 STORAGE REEL REQUIREMENTS

The transfer line assembly shall be wrapped about a spool in preparation for shipment and to facilitate field deployment or long-term storage. Spools shall incorporate a hole through the center to allow for insertion of a spindle used for handling the spool with a crane. Lift points shall be identified on the spool to prevent damage during shipping. If the assembly consists of a single sliding union or flanged end fitting or connection, the sliding union or flanged fitting should be placed on storage reels with the union or flanged end on the outermost portion of the spool. Assemblies shall be secured to prevent unraveling during shipment. All braces and fasteners used shall be identified. The exposed surface of the transfer line shall be protected from damage during shipping and handling. Care should be taken to ensure the transfer line end fittings are not damaged when placing the transfer line on storage reels. Seller shall be advised that the components will be stored outside for an extended period of time and will be exposed to

all inclement weather found at Hanford including rain, snow, wind, and blowing sand. Packaging shall account for all weather conditions.

6.3 SELLER'S PACKAGING AND SHIPPING STANDARDS

Upon review and concurrence of the Buyer, handling, packaging, and delivery procedures may be the Seller's standard operating procedures. The Seller shall submit to the Buyer for review and approval a packaging, shipment, and extended storage plan presenting the practices, procedures, and instructions in accordance with the requirements of Section 5.0.

6.4 HOSE JUMPER ASSEMBLY SHIPMENT

All requirements in Section 6.0 apply to hose jumpers except the hose jumpers may be shipped in a suitable box and packaged such that the minimum bend radius (as specified by the manufacturer) is not exceeded.

APPENDIX A

SKETCHES

SKETCH A – TYPICAL HIHTL ARRANGEMENT. A-2
SKETCH B – HOSE JUMPER. A-3
SKETCH C – PRIMARY HOSE END FITTINGS..... A-4
SKETCH D – PRIMARY HOSE END FITTINGS CONTINUED. A-5
SKETCH E – 4” SECONDARY HOSE END FITTINGS. A-6
SKETCH F – TYPICAL ADJUSTABLE UNION END FITTING. A-7
SKETCH G – HOSE NUMBERING SYSTEM. A-8
SKETCH H – TYPICAL HIHTL HEAT TRACE FEED THROUGH ASSEMBLY. A-9

Appendix A – Sketches (cont.)

Sketch A – Typical HIHTL Arrangement.

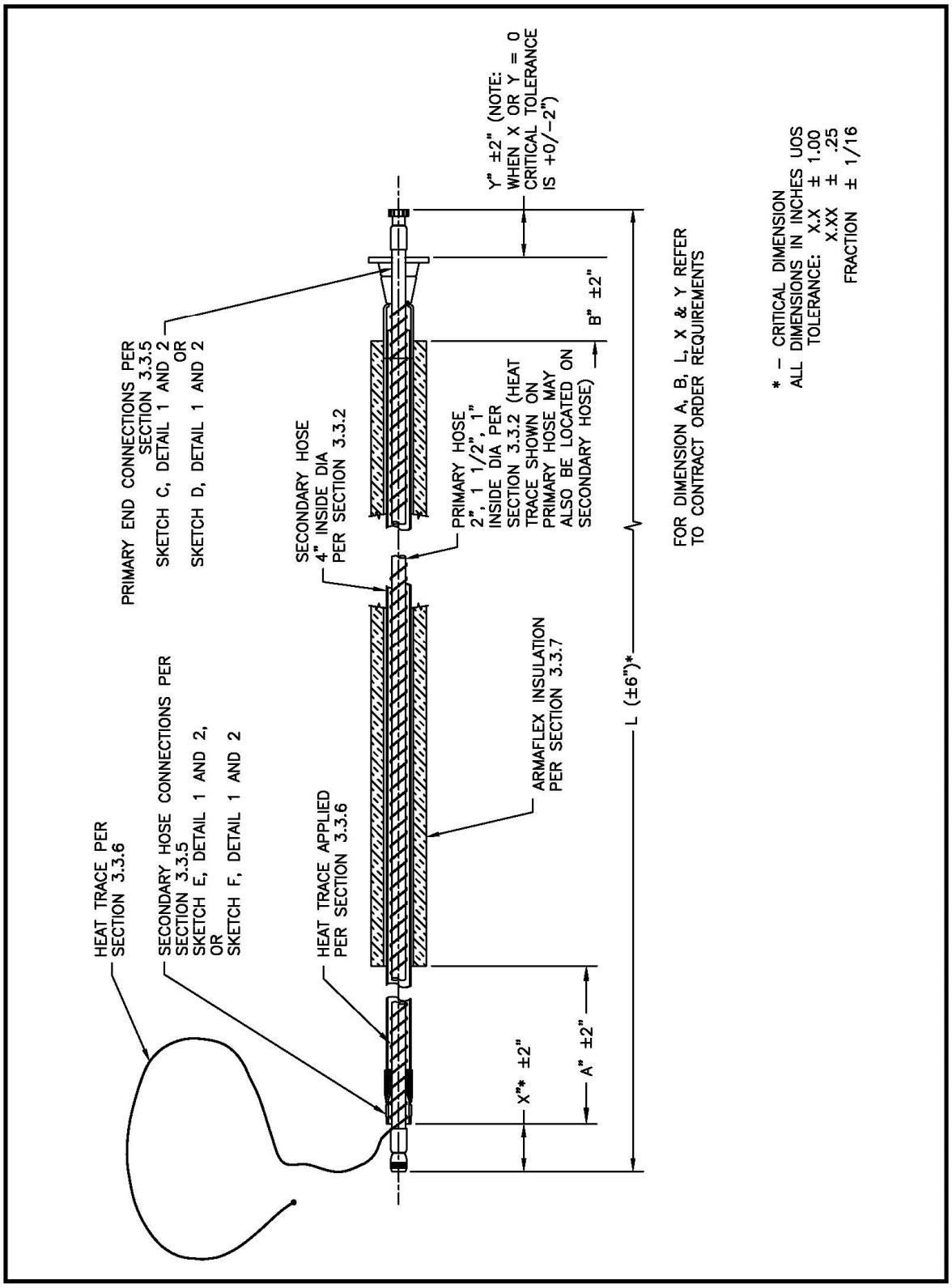

Appendix A – Sketches (cont.)

Sketch B – Hose Jumper.

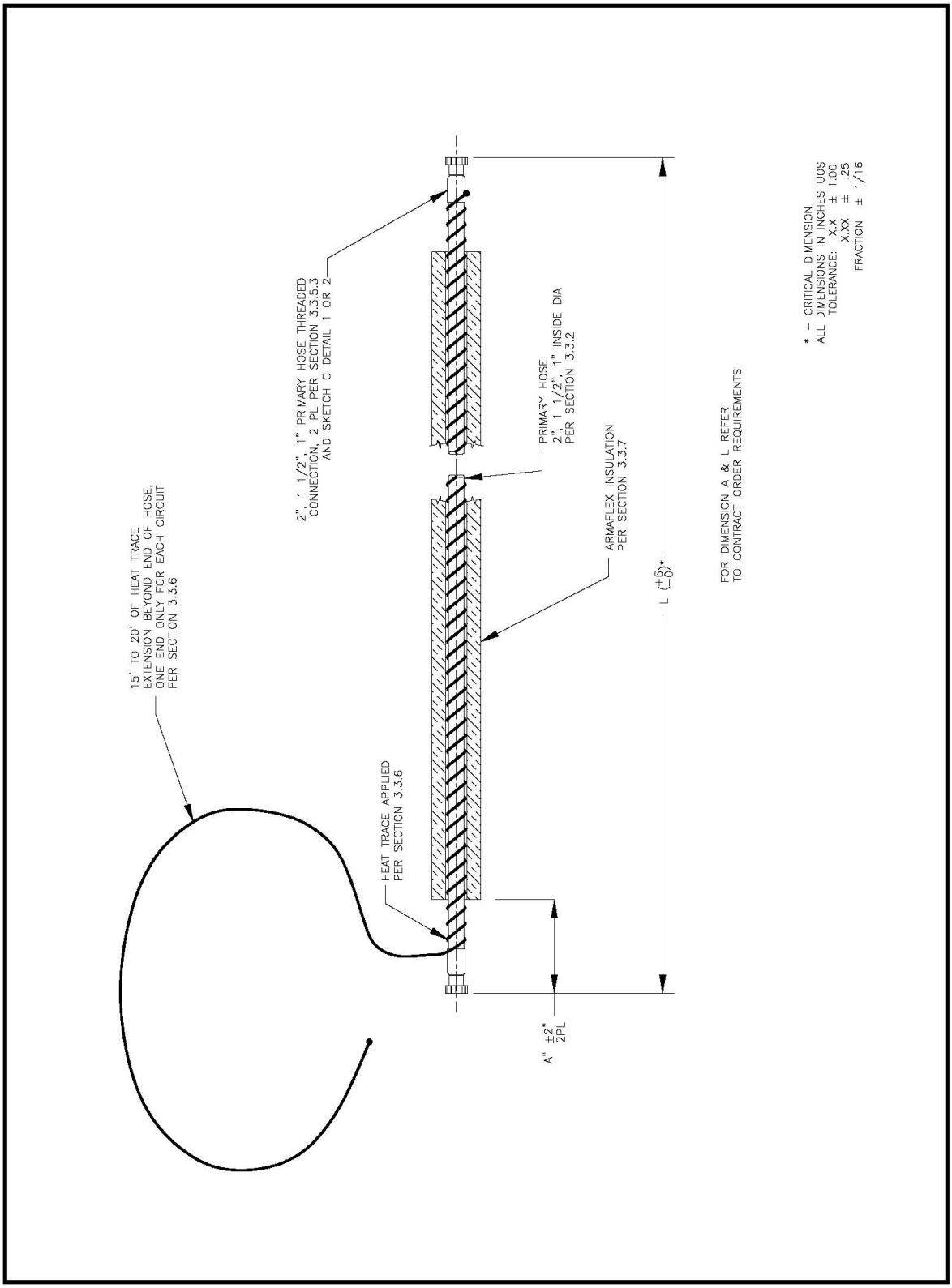

Appendix A – Sketches (cont.)

Sketch C – Primary Hose End Fittings.

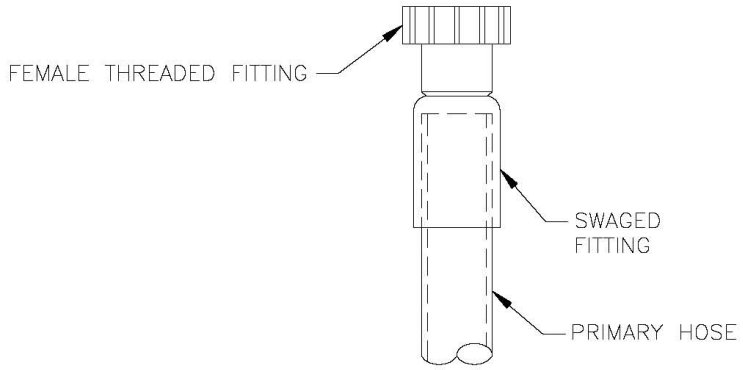

DETAIL 1
HOSE
FITTING FEMALE
PER SECTION 3.3.5.1

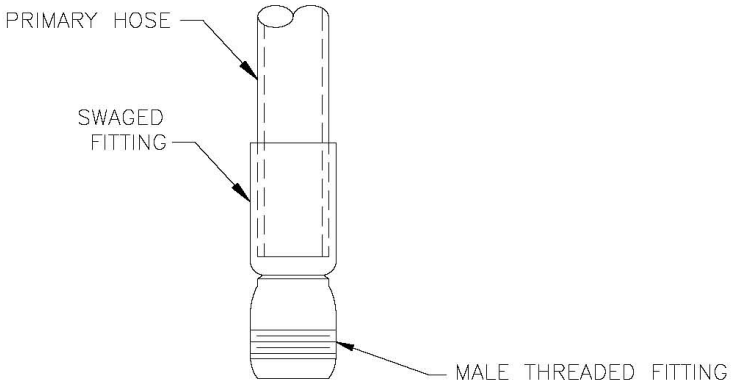

DETAIL 2
HOSE FITTING MALE
PER SECTION 3.3.5.1

Appendix A – Sketches (cont.)

Sketch D – Primary Hose End Fittings Continued.

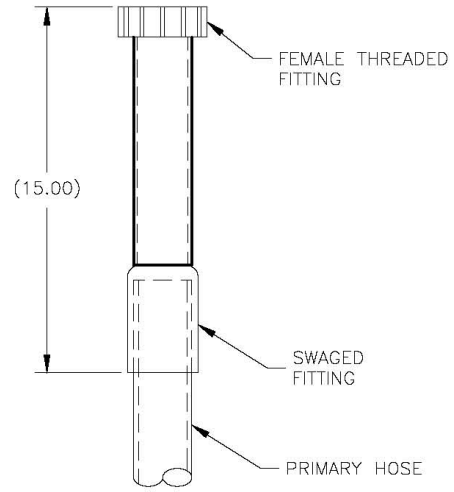

DETAIL 1
PRIMARY HOSE
FITTING FEMALE
PER SECTION 3.3.5.1

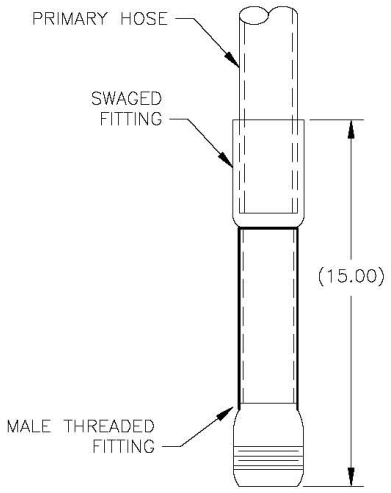

DETAIL 2
PRIMARY HOSE
FITTING MALE
PER SECTION 3.3.5.1

Appendix A – Sketches (cont.)

Sketch E – 4” Secondary Hose End Fittings.

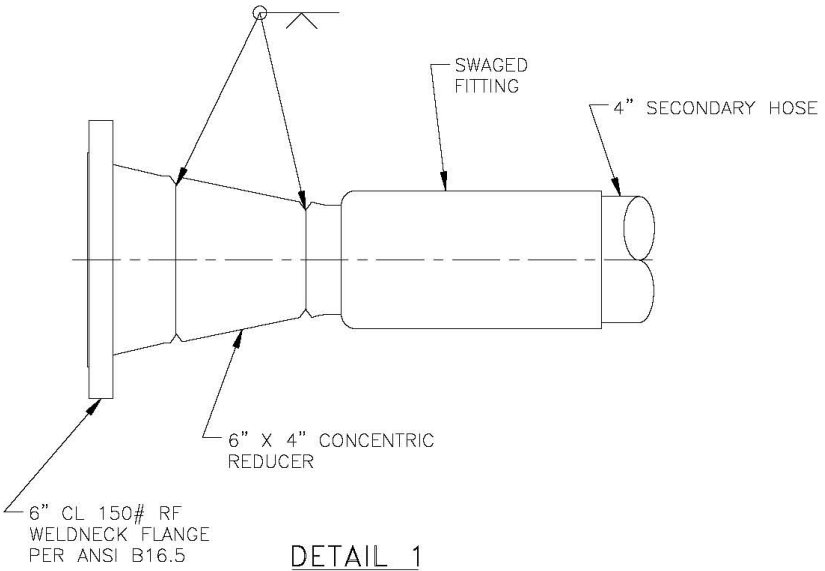

DETAIL 1
4” SECONDARY HOSE
FLANGE FITTING
PER SECTION 3.3.5.1

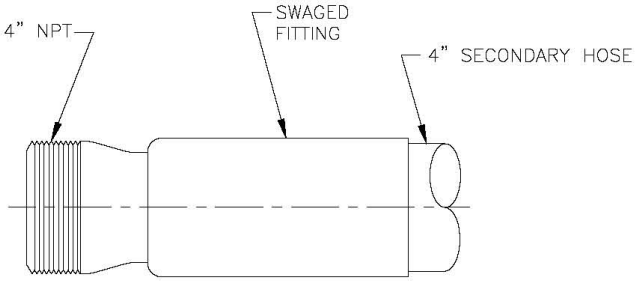

DETAIL 2
4” SECONDARY HOSE
END FITTING
PER SECTION 3.3.5.1

Appendix A – Sketches (cont.)

Sketch F – Typical Adjustable Union End Fitting.

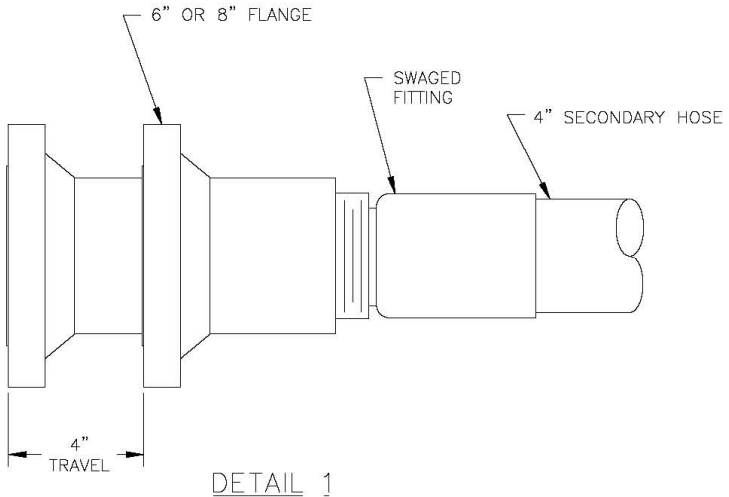

DETAIL 1
THREADED UNION END FITTING
(SWAGED)
PER SECTION 3.3.5.1

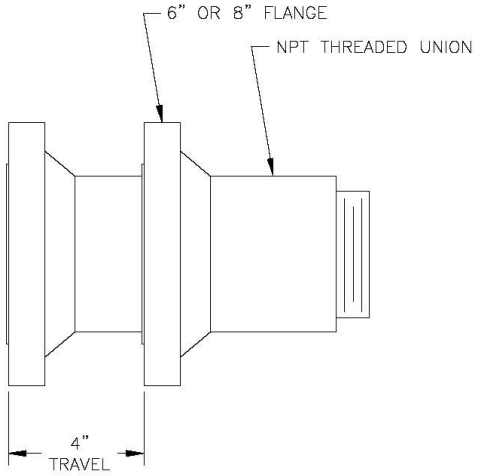

DETAIL 2
THREADED UNION END FITTING (NPT)

PER SECTION 3.3.5.1

Appendix A – Sketches (cont.)

Sketch G – Hose Numbering System.

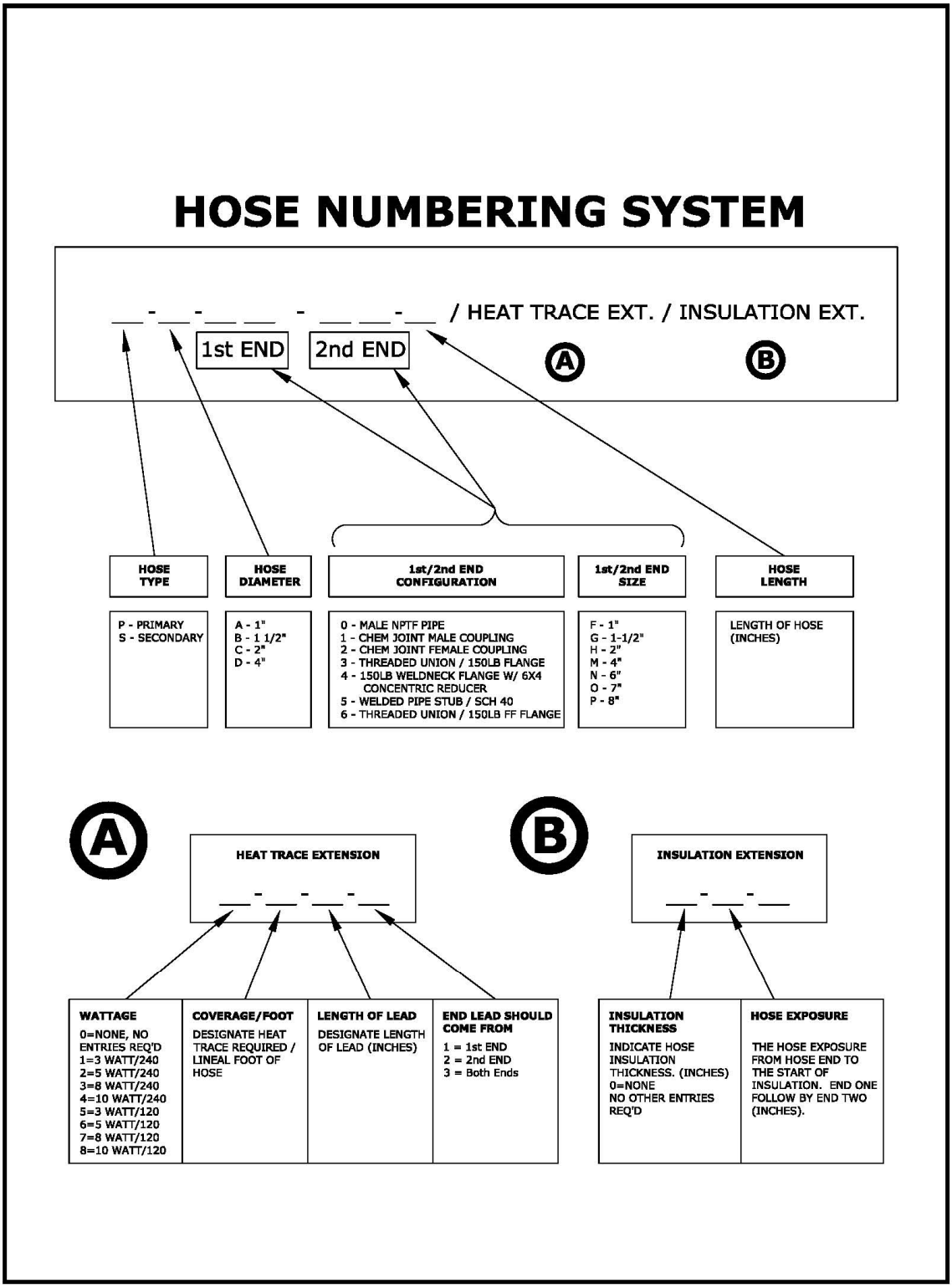

Appendix A – Sketches (cont.)

Sketch H – Typical HIHTL Heat Trace Feed Through Assembly.

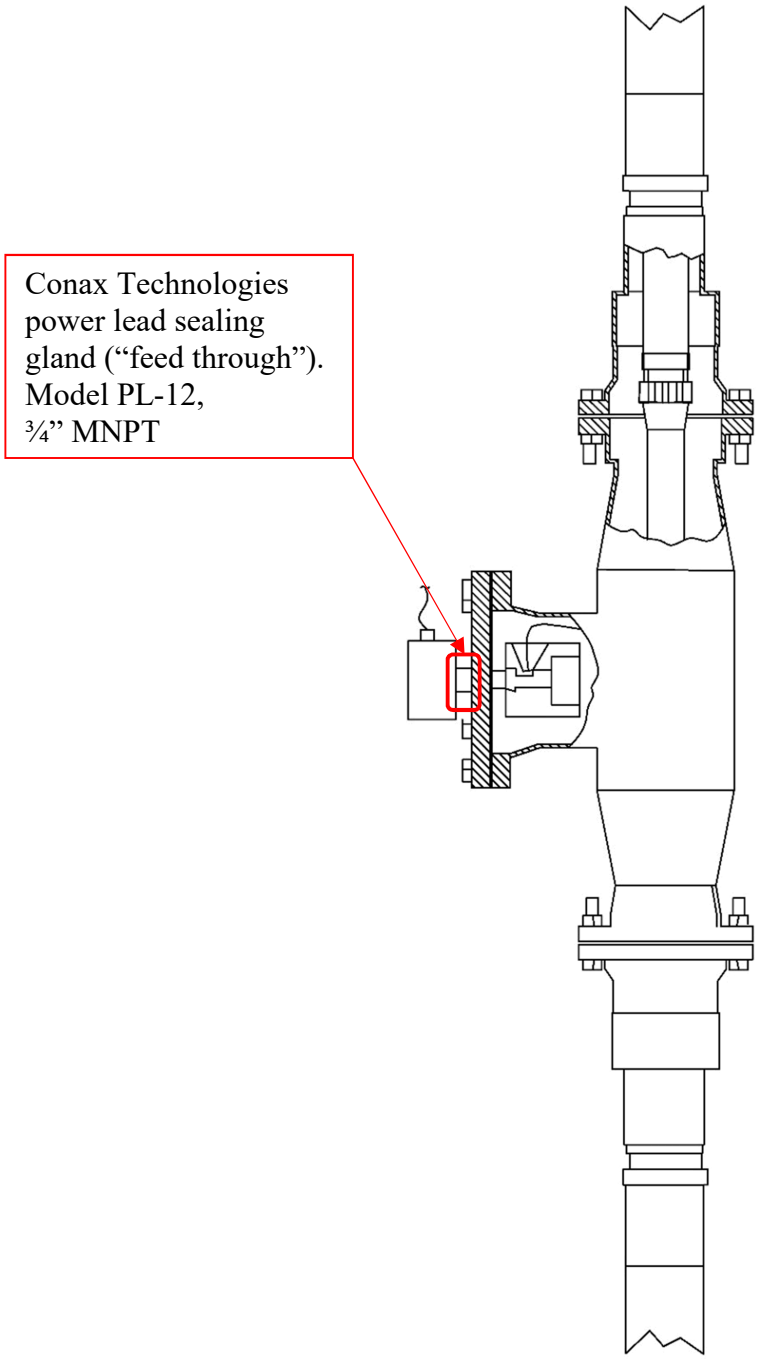

APPENDIX B

CHEMICAL CONSTITUENTS AND FLUID PROPERTIES OF WASTE TO BE TRANSFERRED

Table B2-1, Waste Properties as Fed from Pump B-2
Table B2-2, Waste Properties as Fed from Pump – Single-Shell Tank Retrieval B-2
Table B2-3, Chemical Constituents of Waste Feed for Tank-Side Cesium Removal. B-3
Table B2-4, Chemical Constituents of A-Farm Tanks (A-Farm Supertank)[1] B-4
Table B2-5, Chemical Constituents of AX-Farm Tanks (AX-Farm Supertank)[1] B-5
Table B2-6, Estimated Chemical Concentrations in 241-AY-102 Retrieval Solution[1] B-7
Table B2-7, Estimated Chemical Constituents of 241-AP-102 Supernatant[1] B-8
Table B2-8, Chemical Constituents of C-Farm Tanks (C-Farm Supertank) B-9
Table B2-9, Chemical Constituents of Undiluted Waste for S/SX Tank Farms B-10
Table B2-10, Chemical Constituents of Undiluted Waste for U Tank Farm B-10
Table B2-11, Chemical Constituents of Undiluted Waste for BY Tank Farm B-11
Table B2-12, Chemical Composition of the Liquid Phase of Tank 241-C-103 ..... B-11
Table B2-13, Chemical Composition of Organic Layer in Tank 241-C-103 ..... B-11
Table B2-14, Chemical Composition of Supernatant of Tank 241-C-106 ..... B-12
Table B2-15, Chemical Composition of Solids of Tank 241-C-106 ..... B-12
Table B2-16, Chemical and Physical Properties of the Waste in the 200 Series Tanks B-13
Table B2-17, Estimated Chemical Constituents of AN-101 Supernatant B-14
Table B2-18, Chemical Constituents of AN-106 Supernatant B-15

B1.0 TANK WASTE PROPERTIES INTRODUCTION

Hose-in-hose transfer lines and non-metallic flexible hose jumpers are required for tank waste retrieval in tank farms. The tank waste properties of various single-shell and double-shell tanks (that will be or have been used as a part of retrieval efforts) are contained herein.

B2.0 PHYSCIAL CHARACTERISTICS

Exact tank waste composition and properties from tanks that are a part of waste retrieval efforts are described in waste compatibility assessments for specific waste retrieval campaigns. However, for the purposes of this document, the expected worst case predictions for future retrieval efforts are described below. Worst case predictions listed in Table B2-1 and Table B2-2 are based on information used to procure pumps used for retrieval derived from HNF-SD-WM-SP-012, *Tank Farm Contractor Operation and Utilization Plan,* and RPP-5346, *Waste Feed Delivery Transfer System Analysis.*

Expected chemical constituents for individual retrieval efforts are described in the following sections.

Table B2-1, Waste Properties as Fed from Pump

WASTE PROPERTIES	
Liquid Density	1.05 to 1.5 kg/L
Liquid Viscosity	0.005 to 0.3 g/cm-s (0.5 to 30 cP)
Solids Density	3.0 kg/L maximum
Solids Diameter	4,000 µm maximum*
Solids Volume Percent	0 - 30%, Average ~ 5 – 10% as fed to the pump
Abrasiveness, Miller Number (ASTM G75-82)	Less than 100
Waste Temperature	82°C (180°F) maximum

* Although 50 micron particle size is the nominal design point, the hose must be fully capable of operating with the full range of particle sizes. The number of larger (500 to 4,000 micron) will be relatively small (less than 1% of the total particles). Particles in the range of 50 to 500 micron will constitute less than 5% of the total particles. Particles ranging in size from 0.5 to 50 micron will constitute approximately 95% of the total particles.

Table B2-2, Waste Properties as Fed from Pump – Single-Shell Tank Retrieval

WASTE PROPERTIES	
Liquid Density	1.05 to 1.5 kg/L
Liquid Viscosity	0.005 to 0.3 g/cm-s (0.5 to 30 cP)
Solids Density	3.0 kg/L maximum
Solids Diameter	9,525 µm maximum
Solids Volume Percent	0 – 30%, Average ~5 – 10% as fed to the pump
Abrasiveness, Miller Number (ASTM G75-82)	Less than 100
Waste Temperature	82°C (180°F) maximum

Data from HNF-SD-WM-SP-012.

B2.1 TSCR FEED WASTE PROPERTIES

The TSCR system is a demonstration project associated with 241-AP Tank Farm. The estimated chemical constituent concentrations associated with the project was obtained from RPP-SPEC-61910, *Specification for the Tank Side Cesium Removal Demonstration Project (Project TD101)*. The total inventory of the constituents was calculated based on the anticipated total volume of 5,000,000 gallons of waste feed processing. All other waste properties specified in RPP-SPEC-61910 fall within the ranges for HIHTL in tank farms provided in Table B2-1.

Table B2-3 contains specific chemical constituent properties.

Table B2-3, Chemical Constituents of Waste Feed for Tank-Side Cesium Removal.

Chemical Constituent	Concentration[1] (mol/L)	Concentration[2] (kg/L)	Inventory[3] (kg)
Inorganic			
Al	4.34E-01	1.17E-02	5.85E+04
Bi	5.66E-05	1.18E-05	5.91E+01
Ca	6.67E-04	2.67E-05	1.34E+02
Cl	7.94E-02	2.81E-03	1.41E+04
TIC as CO3	4.66E-01	2.80E-02	1.40E+05
Cr	7.46E-03	3.88E-04	1.94E+03
F	5.29E-02	1.01E-03	5.03E+03
Fe	3.65E-04	2.04E-05	1.02E+02
Hg	8.58E-07	1.72E-07	8.61E-01
K	1.50E-01	5.86E-03	2.93E+04
La	7.14E-06	9.92E-07	4.96E+00
Mn	2.74E-05	1.51E-06	7.53E+00
Na	5.61E+00	1.29E-01	6.45E+05
Ni	2.49E-04	1.46E-05	7.31E+01
NO2	1.12E+00	5.15E-02	2.58E+05
NO3	1.64E+00	1.02E-01	5.08E+05
Pb	1.31E-04	2.71E-05	1.36E+02
PO4	3.53E-02	3.35E-03	1.68E+04
Si	2.32E-03	6.52E-05	3.26E+02
SO4	4.63E-02	4.45E-03	2.22E+04
Sr	7.76E-06	6.80E-07	3.40E+00
UTOTAL	N/A	N/A	N/A
Zr	1.98E-05	1.81E-06	9.03E+00
Organic			
Oxalate	N/A	N/A	N/A
TOC	1.66E-01	1.99E-03	9.97E+03

TIC = Total Inorganic Carbon
TOC = Total Organic Carbon

Notes:

1. RPP-SPEC-61910.
2. Conversion of mol/L to kg/L calculated with analyte molecular weight.
3. Total Inventory based on 5,000,000 gallon maximum feed waste (RPP-SPEC-61910).

B2.2 241-A FARM TANK WASTE PROPERTIES

The conservative worst-case chemical constituent inventory listed for the six tanks in 241-A Tank Farm were calculated by summing the inventory for each chemical constituent for each for the six tanks to form the A-Farm Supertank table (Table B2-4). The chemical constituents were obtained from Tank Waste Information Network System (TWINS), queried 3/28/2018 [241-A Farm Tanks, Best Basis Information (BBI)], http://twins.pnl.gov/twinsdata/forms [TWINS 3/28/2018]).

Table B2-4, Chemical Constituents of A-Farm Tanks (A-Farm Supertank)[1]

Chemical Constituent	Inventory[2] (kg)	Concentration[3] (mg/kg)	Liquid Inventory[4] (kg)	Solution Concentration[5,6] (mg/L)
Inorganic				
Al	119,190	43,153	26,122	40,816
Bi	399	145	21	33
Ca	9,511	3,443	68	106
Cl	21,626	7,830	5,832	9,112
TIC as CO_3	303,170	109,764	10,175	15,898
Cr	11,754	4,256	121	189
F	2,298	832	176	275
Fe	70,772	25,623	13	20
Hg	240	87	0	0
K	13,627	4,934	3,862	6,035
La	390	141	0	0
Mn	6,590	2,386	4	6
Na	969,500	351,010	155,400	242,813
Ni	4,634	1,678	39	62
NO_2	368,253	133,327	88,930	138,953
NO_3	559,732	202,653	147,250	230,078
Pb	3,425	1,240	42	66
PO_4	51,347	18,590	2,810	4,391
Si	46,620	16,879	179	280
SO_4	99,310	35,955	1,822	2,847
Sr	221	80	0	0
UTOTAL	12,540	4,540	2	3
Zr	1,999	724	4	7
Organic				
Oxalate	52,580	19,037	508	794
TOC	32,300	11,694	4,009	6,265

TIC = Total Inorganic Carbon
TOC = Total Organic Carbon

Notes:

1. TWINS 3/28/2018.
2. Total Best Basis Inventory of 241-A Farm saltcake, sludge, and liquids, excluding free hydroxide and supplemental analytes.
3. Concentrations based upon analyte total inventory divided by total 241-A waste inventory (2.76E06 kg) excluding free hydroxide and supplemental analytes
4. Best Basis Inventory of 241-A Farm analyte from liquid sources only; e.g., saltcake interstitial liquid

Table B2-4, Chemical Constituents of A-Farm Tanks (A-Farm Supertank)[1]

Chemical Constituent	Inventory[2] (kg)	Concentration[3] (mg/kg)	Liquid Inventory[4] (kg)	Solution Concentration[5,6] (mg/L)

and supernatant.

5. Maximum concentration considering liquids only. The mass of the analyte sum (from all tanks) is divided by the total liquid (supernatant +saltcake interstitial liquid). Example for Aluminum:
$$26{,}122kg * \frac{1{,}000{,}000mg}{1kg} * \frac{}{648kL} * \frac{1kL}{1{,}000L} = 40{,}816\ \frac{mg}{L}$$
6. Concentrations are in addition to potential 19 M NaOH.

B2.3 241-AX FARM TANK WASTE PROPERTIES

The conservative worst-case chemical constituents listed for the four tanks in 241-AX Tank Farm were collected to form the AX-Farm Supertank table (Table B2-5). The chemical constituents were obtained from TWINS, queried 5/20/2014 [241-AX Farm Tanks, Best Basis Information (BBI)], http://twins.pnl.gov/twinsdata/forms [TWINS 5/20/2014]).

Table B2-5, Chemical Constituents of AX-Farm Tanks (AX-Farm Supertank)[1]

Chemical Constituent	Inventory[2] (kg)	Concentration[3] (mg/kg)	Liquid Inventory[4] (kg)	Solution Concentration[5,6] (mg/L))
Inorganic				
Al	68,180	42,839	11,860	47,063
Bi	50	32	9	37
Ca	1,661	1,044	18	71
Cl	11,709	7,357	2,289	9,083
TIC as CO_3	202,000	126,920	3,160	12,540
Cr	6,331	3,978	171	680
F	1,763	1,108	97	386
Fe	20,622	12,957	7	29
Hg	27	17	0	0
K	9,237	5,804	1,850	7,341
La	110	69	0	0
Mn	1,336	839	2	7
Na	539,690	339,097	67,800	269,048
Ni	1,033	649	8	33
NO_2	220,743	138,697	40,350	160,119
NO_3	396,780	249,304	61,500	244,048
Pb	1,303	819	30	119
PO_4	12,391	7,786	1,355	5,377
Si	3,071	1,930	39	154
SO_4	48,286	30,339	625	2,480
Sr	195	123	0	0
UTOTAL	1,993	1,252	1	2

Table B2-5, Chemical Constituents of AX-Farm Tanks (AX-Farm Supertank)[1]

Chemical Constituent	Inventory[2] (kg)	Concentration[3] (mg/kg)	Liquid Inventory[4] (kg)	Solution Concentration[5,6] (mg/L))
Zr	344	216	2	7
Organic				
Oxalate	25,444	15,987	597	2,368
TOC	17,249	10,838	990	3,929

Notes:
1. TWINS 5/20/2014.
2. Total Best Basis Inventory of AX Farm saltcake, sludge, and liquids, excluding free hydroxide and supplemental analytes.
3. Concentrations based upon analyte total inventory divided by total 241-AX waste inventory (1.59E06 kg) excluding free hydroxide and supplemental analytes.
4. Best Basis Inventory of 241-A Farm analyte from liquid sources only, e.g. saltcake interstitial liquid and supernatant.
5. Maximum concentration considering liquids only. The mass of the analyte sum (from all tanks) is divided by the total liquid (supernatant +saltcake interstitial liquid). Example for Aluminum:
$$11{,}860kg * \frac{1{,}000{,}000mg}{1kg} * \frac{}{252kL} * \frac{1kL}{1{,}000L} = 47{,}063\ \frac{mg}{L}$$
6. Concentrations are in addition to potential 1 M oxalic acid and 19 M NaOH.

B2.4 241-AY-102 RETRIEVAL

B2.4.1 241-AY-102 Tank Waste Properties

The conservative estimated chemical concentration for 241-AY-102 tank waste is listed in Table B2-6. These values are based on current tank BBI information and do not reflect estimated waste streams during transfer times. The chemical constituents were obtained from TWINS, queried 6/4/2014 [Tanks 241-AY-102 and 241-AP-102, Best Basis Information], http://twins.pnl.gov/twinsdata/forms [TWINS 6/4/2014]).

Table B2-6, Estimated Chemical Concentrations in 241-AY-102 Retrieval Solution[1]

Chemical Constituent	Inventory[2] (kg)	Concentration[3] (mg/kg)	Solution Concentration[4,5] (mg/L)
Inorganic			
Al	73,621	50,467	70,149
Bi	83	57	79
Ca	3,154	2,162	3,005
Cl	4,791	3,284	4,565
TIC as CO_3	169,890	116,460	161,879
Cr	2,025	1,388	1,930
F	5,643	3,868	5,377
Fe	83,712	57,384	79,764
Hg	156	107	149
K	101,599	69,646	96,808
La	637	437	607
Mn	13,804	9,463	13,153
Na	459,090	314,706	437,441
Ni	2,333	1,599	2,223
NO_2	132,425	90,777	126,180
NO_3	351,216	240,758	334,654
Pb	4,295	2,944	4,093
PO_4	12,593	8,632	11,999
Si	8,876	6,084	8,457
SO_4	13,554	9,291	12,915
Sr	176	121	168
Zr	78	53	74
Organic			
Oxalate	4,870	3,338	4,640
TOC	10,169	116,460	161,879

Notes:
1. TWINS 6/4/2014.
2. Total Best-Basis Inventory of saltcake, sludge, and liquids, excluding free hydroxide and supplemental analytes.
3. Calculated by dividing the total amount of constituent by the total amount of listed constituents (solids and liquids, 1.46E6 kg).
4. Calculated using supernatant density of 1.39 g/mL (e-mail from J.R. Follett to P. Dorsh, "RE: AY-102 Specific Gravity Assumptions" [Follett, J.R., 2014-06-30]).
5. Concentrations are in addition to potential 1 M oxalic acid and 19 M NaOH.

B2.4.2 241-AP-102 Receiver Tank Waste Properties

The chemical constituents for Tank 241-AP-102 (Table B2-7) were obtained from TWINS on June 4, 2014 [TWINS 6/4/2014].

These values are based on current tank BBI information for the supernatant in the listed tanks only, and do not reflect estimated waste streams during transfer times. Refer to applicable waste compatibility assessments for specific chemical constituents during retrieval operations.

Table B2-7, Estimated Chemical Constituents of 241-AP-102 Supernatant[1]

Chemical Constituent	Inventory[2] (kg)	Concentration[3] (mg/kg)	Solution Concentration[4] (mg/L)
Inorganic			
Al	101,000	48,669	60,836
Bi	96	46	58
Ca	113	54	68
Cl	23,000	11,083	13,854
TIC as CO_3[5]	-	35,440	44,300
Cr	2,650	1,277	1,596
F		0	2,760
Fe	20	10	12
Hg	0	0.00	0.00
K	19,800	9,541	11,926
La	11	5	7
Mn	11	5.06	6
Na	786,000	378,750	473,437
Ni	44	21	26
NO_2	398,000	191,784	239,730
NO_3	721,000	347,428	434,285
Pb	277	133	167
PO_4[5]	-	6,352	7,940
Si	214	103	129
SO_4	12,500	6,023	7,529
Sr	5	2.35	2.94
Zr	9	4.15	5
Organic			
Oxalate[5]	-	1,152	1,440
TOC	-	5,060	6,325

Notes:
1. TWINS 6/4/2014.
2. Total BBI inventory of supernatant, excluding free hydroxide and supplemental analytes.
3. Calculated by dividing the supernatant constituent by the total amount of constituents in the supernatant (2.17E6 kg).
4. Calculated using density of 1.25 g/mL (Follet, J.R., 2014-06-30).
5. Concentration values from Follet, J.R., 2014-06-30.

B2.5 TANK WASTE PROPERTIES FROM PAST RETRIEVALS

Refer to Appendix C in Revision 10 of this document for e-mail attachments regarding the estimate of 241-AN-101 supernatant composition prior to 241-C-104 retrievals, best basis inventory information for Tank 241-AN-101 at this same time, and the best basis inventory for 241-AN-106.

Table B2-8 through Table B2-18 provide chemical composition data for tank waste that has been successfully transferred through HIHTLs and hose jumpers in previous retrieval campaigns. As

such, HIHTLs and hose jumpers may continue to be used in future waste retrievals if the chemical constituents have concentrations equal to or lower than the concentrations listed in the tables.

Note: The addition of 1M Oxalic acid is being used as method to dissolve the solids for retrieval. In addition to the contents of the tank, HIHTLs and hose jumpers shall be sufficiently resistant to Oxalic Acid so that exposure will not reduce the service life of the hose

B2.5.1 C-Farm Tank Waste Properties

The conservative worst-case chemical constituents listed for the 100-series tanks in 241-C Farm were collected to form the C-Farm Supertank table (Table B2-8)[10]. The chemical constituents were obtained from the TWINS, queried 12/6/2006 [241-C Farm Tanks Best Basis Information], http://twins.pnl.gov/twinsdata/forms [TWINS 12/6/2006]). TWINS chemical data for C-Farm from 1998 were also reviewed and no additional chemical constituents were found.

Table B2-8, Chemical Constituents of C-Farm Tanks (C-Farm Supertank)

Chemical Constituent[1]	Inventory kg[2]	Concentration mg/kg	Concentration mg/L
Inorganic			
Al	278,096	200,576	310,893
Bi	14,823	16,430	22,000
Ca	11,696	18,568	29,709
Cl	1,792	1,098	1,780
Cr	1,452	881	1,481
F	34,389	20,879	35,076
Fe	102,000	70,382	109,092
Hg	67	142	220
K	1,324	1,111	1,722
La	269	344	532
Mn	6,973	4,233	7,112
Na	176,988	107,454	180,523
Ni	7,785	16,078	24,857
NO_2	36,295	44,151	70,641
NO_3	97,985	111,896	199,175
Pb	10,100	6,969	10,802
PO_4	58,400	82,216	121,680
Si	35,160	39,926	61,885
SO_4	11,104	12,307	20,672
Sr	270	455	810
TIC as CO_3	75,536	37,565	63,147
Zr	64,498	39,158	65,786
Organic			
Oxalate	5,578	3,387	5,690
TOC	14,081	8,549	14,362

Notes:
1. Excludes C-Farm Tanks 103, 106 and C-200 Series Tanks.

[10] The tables containing the chemical constituents for individual 100-series C-Farm tanks are presented in Revision 10.

2. TWINS Data obtained on December 5, 2006.

B2.5.2 Various Tank Farm Tank Waste Properties

The conservative worst-case chemical constituents listed for the 100-series single-shell tanks in the 241-S, -SX, -U, -BY tanks farms; the 200-series tanks in the 241-C, -C, -T, -U tank farms; and double-shell tanks 241-AN-101 and 241-AN-106 are listed below in Table B2-9 through Table B2-18.

Table B2-9, Chemical Constituents of Undiluted Waste for S/SX Tank Farms

Constituent	Concentration, mg/g[1]	Concentration, mg/kg[1]	Concentration, mg/L
Sodium Hydroxide[2]	156	156,000	211,000
Ammonia	1.33	1,330	1,800
Total Organic Carbon	4.75	4,750	6,410
Organic			
Acetate	2.03	2,030	2,740
Formate	2.17	2,170	2,930
Glycolate	0.739	739	998
Oxalate	7.93	7,930	10,700

Notes:
1. Calculated assuming a specific gravity of 1.35.
2. Based on hydroxide analysis, with a conversion factor of 2.35.

Reference: CH2M HILL Interoffice Memo, File No. 74B20-00-048, *Chemical Characteristics for Liquid Waste in S and SX Tank Farms*.

Table B2-10, Chemical Constituents of Undiluted Waste for U Tank Farm

Constituent	Concentration, mg/g[1]	Concentration, mg/kg[1]	Concentration, mg/L
Sodium Hydroxide[2]	83.0	83,000	116,000
Ammonia	1.29	1,290	1,800
Total Organic Carbon	34.6	34,600	48,400
Organic			
Acetate	1.10	1,100	1,540
Formate	9.57	9,570	13,400
Glycolate	8.71	8,710	12,200
Iminodiacetate	2.20	2,200	3,080
Nitrilotriacetate	0.957	957	1,340
Oxalate	7.36	7,360	10,300

Notes:
1. Calculated assuming a specific gravity of 1.4.
2. Based on hydroxide analysis, with a conversion factor of 2.35

Reference: CH2M HILL Interoffice Memo, File No. 74B20-00-047, *Chemical Characteristics for Liquid Waste in U Tank Farm*.

Appendix B – Chemical Constituents and Fluid Properties (cont.)

Table B2-11, Chemical Constituents of Undiluted Waste for BY Tank Farm

Constituent	Concentration mg/g[1]	Concentration mg/kg[1]	Concentration mg/L
Sodium Hydroxide[2]	102.0	102,000	144,000
Ammonia	0.74	740	1,030
Total Organic Carbon	3.0	2,970	4,160
Organic			
Acetate	2.59	2,590	3,625
Formate	1.26	1,260	1,770
Glycolate	0.21	206	288
Oxalate	0.4	400	560

1 Calculated assuming a specific gravity of 1.4
2 Based on hydroxide analysis, with a conversion factor 2.35
Reference: CH2M HILL Interoffice Memo, File No. 7M100-00-001, *Chemical Characteristics for Liquid Waste in BY Tank Farm*.

Table B2-12, Chemical Composition of the Liquid Phase of Tank 241-C-103

Constituent	Concentration mg/g	Concentration mg/kg	Concentration mg/L
Sodium ion	35.4	35,400	38,200
Ammonia	1.20	1,200	1,280
Total Organic Carbon	6.56	6,560	7,080
Organics			
Oxalate	3.00	3,000	3,340

Notes:
1. Calculated assuming a specific gravity of 1.08.
2. Cs-137 is 43.7 µCi/mL.

Reference: CH2M HILL Interoffice Memo, File No. 7M100-00-001, *Chemical Characteristics for Liquid Waste in BY Tank Farm*.

Table B2-13, Chemical Composition of Organic Layer in Tank 241-C-103

Component[2]	Weight %	CAS[1] Number
Dodecane	2.8	124-18-5
Alkane	0.2	
Alkane	1.1	
Tridecane	11.4	629-50-5
Alkane	0.5	
Alkane	1.0	
Tetradecane	6.0	629-59-4
Alkane	0.7	
Pentadecane	0.9	629-62-9
Dibutyl butyl phosphonate (DBBP)	1.9	
Tri-butyl phosphate (TBP)	47.2	126-73-8

Note:
1. Chemical Abstract Service
2. The rows listed as alkanes were unidentified peaks on a mass spectroscopy instrument. DBBP is a degradation product of TBP. The other identified components are part of the normal paraffin hydrocarbon used as a diluent for the TBP.

Reference: CH2M HILL Interoffice Memo, File No. 7M100-00-001, *Chemical Characteristics for Liquid Waste in BY Tank Farm*.

Table B2-14, Chemical Composition of Supernatant of Tank 241-C-106

Constituent	Average Concentration µg/mL	Maximum Reported Concentration µg/mL
Bromide	352	352
Chloride	264	276
Hydroxide	2,884	3,800
Nitrate	362	364
Nitrite	13,748	14,160
Sulfate	4,282	4,372
Ammonia	22	40
Carbonate	21,500	22,000
Organic		
Acetate	658	670
Oxalate	4,746	4,826
Total Organic Carbon	3,230	3,260

Reference: CH2M HILL Interoffice Memo, File No. 7G300-02-MAK-015, *Chemical Composition in the Tank 241-C-103 Waste that will be Seen by the Rubber Hose*.

Table B2-15, Chemical Composition of Solids of Tank 241-C-106

Constituent	Average Concentration µg/mL	Maximum Reported Concentration µg/mL
Chemical		
Chloride	343.26	588.00
Flouride	224.12	347.00
Nitrate	1,157.72	2,044.00
Nitrite	27,695.00	30,500.00
Phosphate	680.82	1,213.00
Sulfate	7,306.79	7,980.00
Carbonate	22,275.00	24,600.00
Organic		
Total Organic Carbon	5,437.81	34,800.00
Dodecane	18.55	27.00
Oxalate	3,152.79	3,700.00
Pentadecane	4.32	6.27
Tetradecane	52.30	77.00
Tributyl phosphate	40.35	48.80
Tridecane	82.30	119.00
Undecane	2.83	4.07

Note: Average Specific Gravity was 1.18, Maximum Reported was 1.25.
Reference: CH2M HILL Interoffice Memo, File No. 7G300-02-MAK-044, *Chemical Characteristics for Waste in Tank 241-C-106*.

Table B2-16, Chemical and Physical Properties of the Waste in the 200 Series Tanks

Species	B-201	B-202	B-203	B-204	C-201	C-202	C-203	C-204
Sludge, gallons	30,400	29,300	51,000	50,000	1,000	800	2,600	2,400
Supernatant, gallons	--	--	500	800	--	--	--	--
Total Waste, gallons	30,400	29,300	51,500	50,800	1,000	800	2,600	2,400
pH, minimum	--	12.02	10.52	--	9.74	9.57	10.25	--
Density, sludge, g/mL	1.26	1.22	1.19	1.19	1.44	1.44	1.62	1.59
Density, supernatant, g/mL	--	--	1.05	1.05	--	--	--	--
%H_2O, sludge	64.2	75.8	75.75	77.3	8.65	4.65	41.7	41.7
%H_2O, supernatant	--	--	89.4	91.4	--	--	--	--
Bismuth, Bi, kg	13,400	4,620	9,500	10,900	--	--	--	--
Nitrate, NO_3, kg	7,320	8,320	14,400	11,200	219	429	2,400	2,220
Sodium, Na, kg	4,960	5,320	6,700	5,990	644	693	2,280	2,050
Iron, Fe, kg	1,660	1,610	757	836	1,450	426	510	459
Total U, kg	22.6	43.7	2.25	36.9	81.4	594	2,500	2,300
Carbonate, $CO_3^{=}$, kg	2,300	1,330	790	2,540	536	630	1,420	1,280
Species	**T-201**	**T-202**	**T-203**	**T-204**	**U-201**	**U-202**	**U-203**	**U-204**
Sludge, gallons	29,100	21,400	36,200	37,300	2,900	2,600	2,400	1,800
Supernatant, gallons	2,100	--	--	--	1,000	1,000	1,000	1,000
Total Waste, gallons	31,200	21,400	36,200	37,300	3,900	3,600	3,400	2,800
pH, minimum	--	--	10.9	9.84	11.83	11.82	12.24	9.83
Density, sludge, g/mL	1.31	1.18	1.22	1.18	1.63	1.51	1.59	1.47
Density, supernatant, g/mL	1.06	--	--	--	1.26	1.28	1.28	1.11
%H_2O, sludge	67.5	75.8	76.2	75	27.1	27.8	40.2	26.1
%H_2O, supernatant	91.2	--	--	--	69.3	69.1	68.7	86.7
Bismuth, Bi, kg	13,100	3,430	6,580	8,910	14.8	10.5	6.61	10.1
Nitrate, NO_3, kg	6,670	5,890	10,000	9,540	879	843	808	354
Sodium, Na, kg	4,190	3,300	5,890	5,500	1,610	1,420	2,080	291
Aluminum, Al, kg	11.8	7.02	9.69	9.27	3,520	3,040	1,370	2,270
Phosphate, PO_4^{-3},kg	1,190	634	1,230	1,400	950	750	1,760	27.1
Total U, kg	19.2	10.2	0.551	0.19	0.256	0.224	0.108	10.5

Reference: RPP-5346

Table B2-17, Estimated Chemical Constituents of AN-101 Supernatant

Chemical Constituent	Bounding Composition Concentration mg/L
Inorganic	
Al	19,100
Bi	26
Ca	90
Cl	7,710
Cr	674
F	205
Fe	16
Hg	0
K	4,040
La	2
Mn	1
Na	209,000
Ni	98
NO_2	110,000
NO_3	162,000
Pb	28
PO_4	4,590
Si	103
SO_4	6,070
Sr	1
TIC as CO_3	25,900
Zr	2
Organic	
Oxalate	1,770
TOC	5,370

Reference: TWINS), queried 7/23/2007
[241-AN-101 Best Basis Information],
http://twins.pnl.gov/twinsdata/forms
[TWINS 7/23/2007]

Table B2-18, Chemical Constituents of AN-106 Supernatant

Chemical Constituent	AN-106 Final Weighted Average mole/L[1]	Inventory kg	Concentration mg/kg[2,3]	Concentration mg/L
Inorganic				
Al	0.045	3,970	1,071	1,220
OH	0.370	20,463	5,518	6,290
Na	2.230	166,862	44,991	51,290
NO_2	0.567	84,852	22,879	26,082
NO_3	0.029	5,890	1,588	1,810
PO_4	0.024	7,387	1,992	2,271
Organic				
TOC	0.068	2,639	712	811

Notes:
1. Final weighted averages for Tank 241-AN-106 obtained from RPP-RPT-31789, *Waste Compatibility Assessment of Tank 241-AY-102 Waste with Tank 241-AN-106 Waste*.
2. Calculated using a specific gravity of 1.14 per (Reference RPP-RPT-31789).
3. Calculated using a 241-AN-106 tank waste volume of 859 Kgal (Reference RPP-RPT-31789).

B3.0 REFERENCES

RPP-SPEC-61910, 2018, *Specification the Tank Side Cesium Removal Demonstration Project*, Rev. 1, Washington Protection Solutions, LLC, Richland, Washington

CH2M HILL Interoffice Memo, File No. 74B20-00-047, *Chemical Characteristics for Liquid Waste in U Tank Farm,* CH2M HILL Hanford Group, Inc., Richland, Washington

CH2M HILL Interoffice Memo, File No. 74B20-00-048, *Chemical Characteristics for Liquid Waste in S and SX Tank Farms,* CH2M HILL Hanford Group, Inc., Richland, Washington

CH2M HILL Interoffice Memo, File No. 7G300-02-MAK-015, *Chemical Composition in the Tank 241-C-103 Waste That Will Be Seen by the Rubber Hose,* CH2M HILL Hanford Group, Inc., Richland, Washington

CH2M HILL Interoffice Memo, File No. 7G300-02-MAK-044, *Chemical Characteristics for Waste in Tank 241-C-106,* CH2M HILL Hanford Group, Inc., Richland, Washington.

CH2M HILL Interoffice Memo, File No. 7M100-00-001, *Chemical Characteristics for Liquid Waste in BY Tank Farm,* CH2M HILL Hanford Group, Inc., Richland, Washington

Follett, J. R., 2014-06-30, "RE: AY-102 Specific Gravity Assumptions," (e-mail to P. Dorsh), Washington River Protection Solutions, LLC, Richland, Washington

HNF-SD-WM-SP-012, *Tank Farm Contractor Operation and Utilization Plan*, Rev. 6, CH2M HILL Hanford Group, Inc., Richland, Washington

RPP-5346, 2002, *Waste Feed Delivery Transfer System Analysis*, Rev. 2, CH2M HILL Hanford Group, Inc., Richland, Washington

RPP-14859, 2013, *Specification for Hose-in-Hose Transfer Line and Hose Jumpers*, Rev. 10, Washington River Protection Solutions, LLC, Richland, Washington

RPP-RPT-31789, 2006, *Waste Compatibility Assessment of Tank 241-AY-102 Waste with Tank 241-AN-106 Waste*, Rev. 0, CH2M HILL Hanford Group, Inc., Richland, Washington

Tank Waste Information Network System (TWINS), Queried 12/6/2006, [241-C Farm Tanks Best Basis Information], http://twins.pnl.gov/twinsdata/forms

Tank Waste Information Network System (TWINS), Queried 3/28/2018, [241-A Farm, Best Basis Information], http://twins.pnl.gov/twinsdata/forms

Tank Waste Information Network System (TWINS), Queried 5/20/2014, [241-AX Farm Tanks, Best Basis Information], http://twins.pnl.gov/twinsdata/forms

Tank Waste Information Network System (TWINS), Queried 5/20/2014, [241-AZ-102, Best Basis Information], http://twins.pnl.gov/twinsdata/forms

Tank Waste Information Network System (TWINS), Queried 6/4/2014, [241-AY-102 and 241-AP-102, Best Basis Information], http://twins.pnl.gov/twinsdata/forms

Tank Waste Information Network System (TWINS), Queried 7/23/2007, [241-AN-101 Best Basis Information], http://twins.pnl.gov/twinsdata/forms

Tank Waste Information Network System (TWINS), Queried 8/2/2010, [241-AX and 241-A Farm Tanks, Best Basis Information], http://twins.pnl.gov/twinsdata/forms

APPENDIX C

GENERIC "TANK OPERATIONS CONTRACTOR (TOC) MASTER SUBMITTAL REGISTER (MSR)" FORM (A-6005-317)

Appendix C, Generic Master Submittal Register form (A-6005-317) (cont.)

TOC MASTER SUBMITTAL REGISTER (MSR)

1. MSR Number *(COMPLETED BY DOCUMENT CONTROL)*:				2. REV:
3. Requisition:	4. Subcontract-Release No.:	5. Purchase Order:	6. Title:	7. Vendor Name:
8. Responsible Person:		9. Project No.:		10. Date:

11. Submittal	12. Specification	13. SOW Section Number	14. Description	15. Purpose	16. Submittal Schedule	17. When Required	18. Date Submittal Due From Vendor	19. Turnaround Times		20. Number of Copies E / H
								External *(Vendor)*	Internal *(WRPS)*	
001										/
002										/
003										/
004										/
005										/
006										/
007										/
008										/
009										/
010										/
011										/
012										/
013										/
014										/
015										/
016										/
017										/
018										/

Purpose:
APP – Approval INF/REC – Information/Record

Submittal Schedule:
PF – Prior to Fabrication PP – Prior to Procurement PS – Prior to Shipment PT – Prior to Testing WS – With Shipment
I – Before Installation P – Before Final Payment U- Before Use UDI – Upon Date Identified

NOTE: See page 2 of instructions for definitions
Media
E – Electronic H - Hardcopy

Page **1** of **1** A-6005-317 (REV 13)

C-1

APPENDIX D

MINIMUM PROOF TEST PRESSURE FOR CONAX FEEDTHROUGH TO SUBSTANTIATE WORKING PRESSURE RATING

Appendix D – Minimum Proof Test Pressure for Conax Feedthrough, etc. (cont.)

ARES CORPORATION	CALCULATION COVER SHEET	Page No. 1 of 16	
		Date 04/19/2016	Rev. No. 0
		Calculation No: 054409.15.025-M-004	

Project No.	Project Title:	Client:
054409.15.025	C-105 Waste Retrieval Sluicing Design	Washington River Protection Solutions

Title:

Minimum Proof Test Pressure for Conax Feedthrough to Substantiate Working Pressure Rating

Purpose and Objective:

The unlisted component associated with the Hose-in-Hose Transfer Line Heat Trace Feed Through (HTFT) Assembly (i.e., the Conax feedthrough) requires the substantiation of its pressure design per ASME B31.3-2014 304.7.2 as an unlisted component. Per this section of the Code, 304.7.2(c) allows a proof test per ASME VIII, Div. 1, UG-101. According to the UG-101 proof test procedure, specifically per the Bursting Test Procedure (UG-101(m)), a hydrostatic pressure test of the HTFT's feedthrough component may be performed to establish the maximum allowable working pressure. This test may be stopped at a specified pressure prior to burst that could be used to substantiate the maximum rated working pressure of 170 psig for secondary hose assemblies (per RPP-14859). This calculation is to determine the appropriate minimum test pressure that would support this substantiation.

Rev. No.	Total Pages		Prepared By	Checked By	PM/TL
0	16	Print Name/ Sign:	J.S. Huisingh J.S. Huisingh	T.F. Schmitt Ted Schmitt	P.M. Dorsh Paul M Dorsh
		Date:	04/19/16	04/19/16	4/19/2016

Revision Description (Revision Description/Affected Pages):

Initial issuance.

		Print Name/ Sign:			
		Date:			

Revision Description (Revision Description/Affected Pages):

Quality Assurance Procedure 3.1 Calculation Cover Sheet (08-15)

Appendix D – Minimum Proof Test Pressure for Conax Feedthrough, etc. (cont.)

ARES CORPORATION

CALCULATION REVIEW CHECKLIST

Project No.	Calculation No.	Rev.	Page No.
054409.15.025	054409.15.025-M-004	0	2 of 16

Items Checked	Accept Y	Accept N	Accept N/A	Description of Resolution for Unacceptable Items	Initial	Date
1. Cover sheets properly completed.	√					
2. Calculation sheet headers complete with calculation number, revision number, etc.	√					
3. Calculation sheet contents are legible, accurate and complete per format.	√					
4. Listed attachments included.	√					
5. Calculation objective clearly described.	√					
6. Criteria are suitable and properly referenced to task specific documents.	√					
7. Assumptions and input data described and attached or referenced to task documents.	√					
8. Calculation method identified and appropriate for the design activity.	√					
9. Calculation results reasonable and correctly described in results and conclusions.	√					
10. Physical property calculations generated by CAD software verified via hand calculations.			√			
11. Computer program identified with version and revision.	√					
12. Computer input/output provided or referenced.	√					
13. Computer run traceable to calculation (file #, etc.).	√					
14. Computer input data within permissible design input range.	√					
15. Computer program validation/verification addressed.	√					
16. Computer operating system in use for calculation preparation is the same as when the software was verified on machine.			√			

Calculation Checking Method	√	Applicable Pages
1. Direct Step-by-Step Check	√	All
2. Reference Chart(s) or Book(s) Comparison (Append Documentation)		
3. Alternate Calculation (Append Documentation)		

Comments:

Checker (Print Name and Sign):	Date:
T.F. Schmitt, P.E.	04/19/2016
Originator (Print Name and Sign):	**Date:**
J.S. Huisingh, P.E.	04/19/2016

Signatures obtained only after discrepancies are corrected and comments are resolved.

Quality Assurance Procedure 3.1 Calculation Review Checklist (08-15)

CALCULATION SHEET

Project No. 054409.15.025	Calculation No. 054409.15.025-M-004	Rev. 0	Page No. 3 of 16
Title: Minimum Proof Test Pressure for Conax Feedthrough to Substantiate Working Pressure Rating			
Prepared By: J.S. Huisingh	Date: 04/19/2016	Checked By: T.F. Schmitt	Date: 04/19/2016

TABLE OF CONTENTS

1.0 PURPOSE 4
2.0 METHODOLOGY 4
3.0 DESIGN INPUTS 4
4.0 ASSUMPTIONS 5
5.0 COMPUTER SOFTWARE 5
6.0 CALCULATIONS 6
7.0 CONCLUSIONS 8
8.0 REFERENCES 8

Attachments

Attachment 1
Conax Technologies PL-12-3 Catalog Documentation

Attachment 2
Correspondence with Conax Technologies Regarding PL-12-3 Properties

Figures

Figure 3-1. Radial Dimensions of Conax Technologies for PL-12-3 Sealing Gland. 5

CALCULATION SHEET

Project No. 054409.15.025	Calculation No. 054409.15.025-M-004	Rev. 0	Page No. 4 of 16
Title: Minimum Proof Test Pressure for Conax Feedthrough to Substantiate Working Pressure Rating			
Prepared By: J.S. Huisingh	Date: 04/19/2016	Checked By: T.F. Schmitt	Date: 04/19/2016

1.0 PURPOSE

The unlisted component associated with the Hose-in-Hose Transfer Line Heat (HIHTL) Trace Feed Through (HTFT) Assembly (i.e., the Conax feedthrough) requires the substantiation of its pressure design per ASME B31.3-2014 304.7.2 as an unlisted component. Per this section of the Code, 304.7.2(c) allows a proof test per ASME VIII, Div. 1 (VIII-1), UG-101. According to the UG-101 proof test procedure, specifically per the Bursting Test Procedure (UG-101(m)), a hydrostatic pressure test of the HTFT's feedthrough component may be performed to establish the maximum allowable working pressure. This test may be stopped at a specified pressure prior to burst that could be used to substantiate the maximum rated working pressure of 170 psig for secondary hose assemblies (per RPP-14859). This calculation is to determine the appropriate minimum test pressure that would support this substantiation.

2.0 METHODOLOGY

As noted in the Purpose section above, the requirements of VIII-1 UG-101(m) will satisfy the unlisted component pressure design substantiation requirements in ASME B31.3 Section 304.7.2. Because a complete hydrostatic test to burst is not required per UG-101(m), this method is the preferred, expedient method in providing substantiation of the pressure design. The calculation of the minimum required cut-off test pressure is performed in Section 6.0.

3.0 DESIGN INPUTS

1. The feedthrough in question is a Conax Technologies PL-12-B 3-G, 12-12 sealing gland (i.e., PL-12-3 in catalog data in Attachment 1) (Reference River Bend drawing HTFT-668-1-12-12 Sheet 1 Rev. 1).

2. The body material for the stainless steel PL-12-3 is ASTM A582, Type 303, annealed (UNS S30300) (Reference Attachment 2).

3. The corrosion rate is taken to be 0.2 mils per year per TFC-ENG-STD-22 Section 3.5.2.1.

4. The maximum total useable life of HIHTL assemblies is 10 years (= 7 years shelf life + 3 years in service per TFC-ENG-STD-21 Section 3.1 Bullet 6).

5. The weld joint efficiency value per ASME VIII Division 1, UW-12(d) for seamless parts without radiography would be 0.85. However, because there are no welds involved, a value of 1.0 is appropriate and is used in this calculation.

ARES CORPORATION	**CALCULATION SHEET**		
Project No. 054409.15.025	Calculation No. 054409.15.025-M-004	Rev. 0	Page No. 5 of 16
Title: Minimum Proof Test Pressure for Conax Feedthrough to Substantiate Working Pressure Rating			
Prepared By: J.S. Huisingh	Date: 04/19/2016	Checked By: T.F. Schmitt	Date: 04/19/2016

6. As provided in the email in Attachment 2 and repeated below as Figure 3-1 for convenience below, the following radial dimensions are applicable for the Conax Technologies PL-12-3 sealing gland, ASTM A582, Grade 303 SST: The maximum inner radial dimension of the fitting body is r_1 = 0.343 in. The minimum outer radial dimension of the fitting body as shown in the referenced email is r_2 = 0.5575 in.

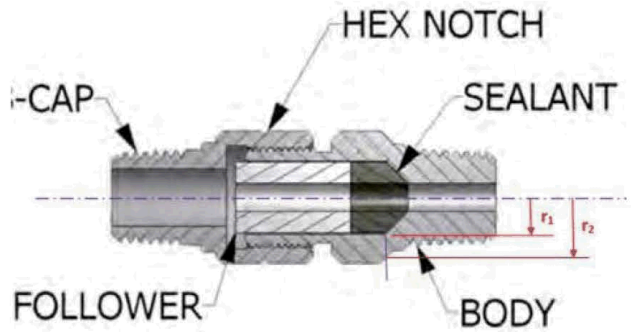

Figure 3-1. Radial Dimensions of Conax Technologies for PL-12-3 Sealing Gland.

4.0 ASSUMPTIONS

1. Specified minimum tensile strength at room temperature for the ASTM A582, Type 303, annealed (UNS S30300) body material is S_μ = 75ksi (conservatively small). (See PSP specification sheet for Alloy 303, UNS S30300 at www.PennStainless.com, which is markedly the lowest value of the online literature search for tensile strengths of this steel. The most common value cited in the search was 90 ksi, as per www.AndersonShumaker.com. Note also that B31.3 does list UNS S30300 bolting material A320 Grade B8F with S_μ = 75ksi.)
2. Maximum tensile strength of range of specification at room temperature is $S_{\mu r}$ = 90ksi. The maximum value is taken to be the commonly found value from the literature search. See bullet above for S_μ.)

There are no unverified assumptions made in this calculation.

5.0 COMPUTER SOFTWARE

No software was used in this calculation that requires verification. Mathcad®[1] 15 was used for the hand calculations performed in Section 6.0 below. Mathcad calculations are checked using a hand-held calculator.

[1] Mathcad is a registered trademark of Parametric Technology Corporation, Needham, Massachusetts.

CALCULATION SHEET

Project No. 054409.15.025	Calculation No. 054409.15.025-M-004	Rev. 0	Page No. 6 of 16
Title: Minimum Proof Test Pressure for Conax Feedthrough to Substantiate Working Pressure Rating			
Prepared By: J.S. Huisingh	Date: 04/19/2016	Checked By: T.F. Schmitt	Date: 04/19/2016

6.0 CALCULATIONS

Inputs per Section 3.0 *Design Inputs*

$c_r := 0.0002 \frac{in}{yr}$ — Corrosion rate, 0.2 mils per year, per TFC-ENG-STD-22 Section 3.5.2.1

$L := 10yr$ — Maximum total useable life of HIHTL assemblies (7 years shelf life + 3 years in service per TFC-ENG-STD-21 Sec. 3.1 bullet 6).

$E := 1.0$ — Weld joint efficiency per ASME VIII Div. 1, UW-12(d) for seamless parts without radiography would be 0.85. However, because there are no welds involved, a value of 1.0 is appropriate.

$B_{FT} := B_{FT_it} = 985\ psi$ — bursting test pressure, or hydrostatic test pressure at which the test was stopped. The latter definition is used in this calculation as the required minimum actual test pressure of the HTFT.

Conax PL-12-3, ASTM A582 Grade 303 SST. Physical dimensions as provided by Conax (Ref. Attachment 2 email).

$r_1 := 0.343in$ $r_2 := 0.5575in$ — Maximum inner and minimum outer radial dimensions of fitting body as shown in the referenced email.

$D := 2 \cdot r_2 = 1.115\ in$ $t := r_2 - r_1 = 0.215\ in$ — Outside fitting diameter and thickness of fitting body (ASME B36.19 Table 2)

Tensile Strengths (See ASME VIII, Div. 1, UG-101(m) and Section 3.0 *Design Inputs*.)

ASTM A582 Type 303 annealed (UNS S30300) Feed-Through Body Material

$S_\mu := 75ksi$ — Specified minimum tensile strength at room temperature (see PSP specification sheet for Alloy 303, UNS S30300 at www.PennStainless.com, which is markedly the lowest value of the online literature search for tensile strengths of this steel. (The most common value cited in the search was 90 ksi, as per www.AndersonShumaker.com.) (Note: B31.3 does list UNS S30300 bolting material, A320 Grade B8F with Sμ = 75ksi.)

$S_{\mu r} := 90ksi$ — Maximum tensile strength of range of specification at room temperature. Max value assumed to be the commonly found value from the literature search. (See notes above for Sμ.)

Calculations for Maximum Allowable Working Pressure

Calculation for Maximum Allowable Working Pressure (MAWP)

Where P_{FT} = maximum allowable working pressure for the feed-through (sealing gland), UG-109(m) cites the following equation to calculate it on the basis of **B**, the bursting test pressure or the hydrostatic test pressure at which the test was stopped.

$$P_{FT} := \frac{B_{FT}}{4} \cdot \frac{S_\mu \cdot E}{S_{\mu r}} = 205.208\ psi$$

(However, see reduction factors below.)

Quality Assurance Procedure 3.1 Calculation Sheet (05-10)

CALCULATION SHEET

Project No. 054409.15.025	Calculation No. 054409.15.025-M-004	Rev. 0	Page No. 7 of 16
Title: Minimum Proof Test Pressure for Conax Feedthrough to Substantiate Working Pressure Rating			
Prepared By: J.S. Huisingh	Date: 04/19/2016	Checked By: T.F. Schmitt	Date: 04/19/2016

MAWP Reduction Factor to Account for Corrosion

One might infer from TFC-ENG-DESIGN-C-60 Table 1 Item 6 that because this HTFT assembly or its unlisted sub-component (Conax feed-through) is an unlisted component that the corrosion-erosion allowance for pressure design may be neglected. However, because the emphasis here is on the rubber materials involved, the allowance for austenitic steel piping is conservatively assumed to apply (even though no waste regularly flows through the secondary components).

$c := c_r \cdot L = 0.002\ \text{in}$ corrosion allowance (see Design Inputs above)

Per UG-101(i), the MAWP is to be multiplied by a factor to account for corrosion when it is not practical to perform the proof test with a test item with associated thicknesses reduced by the appropriate corrosion allowance. The following factor is defined for this purpose.

$n_{FT} := 1$ factor per UG-101(i) for curves surfaces such as parts of cylinders

$$F_{cor_FT} := \frac{\left(\frac{t-c}{in}\right)^{n_{FT}}}{\left(\frac{t}{in}\right)^{n_{FT}}} = 0.991$$

MAWP factor for the feed-through

MAWP Reduction Factor to Account for Design Temperature

Per UG-101(k), the MAWP is to be multiplied by a factor to account for when parts are to operate at temperatures at which the allowable stress value of the material is less than at the test temperature. The following factor is applied.

$S := 15800\text{psi}$ maximum allowable stress value at design temperature of 180F (Ref. RPP-14859 Sec. 3.2.4) as interpolated from ASME Sec. II allowable stress Table 3 for SA-320 Grade B8F (covers both S30323 and S30300 per SA-320 spec in ASME Sec. II Part A).

$S_2 := 18800\text{psi}$ maximum allowable stress value at test temperature as taken from ASME Sec. II allowable stress Table 3 for SA-320 Grade B8F (covers both S30323 and S30300 per SA-320 spec in ASME Sec. II Part A).

$$F_{DT} := \frac{S}{S_2} = 0.84$$

Factored MAWP

For the 3/4" MNPT feed-through, the iterated value of test pressure was ultimately set at to arrive at a sufficiently high enough maximum allowable working pressure that would exceed the 170 psig maximum rated working pressure provided in RPP-14859 Sec. 3.2.1 for the secondary hose assemblies after applying the applicable reduction factors. $B_{FT_it} \equiv 985\text{psi}$

$$MAWP_{FT} := P_{FT} \cdot F_{cor_FT} \cdot F_{DT} = 170.9\ \text{psi} \qquad DCR := \frac{170\text{psi}}{MAWP_{FT}} = 0.995$$

Check := if(DCR > 1, "Not supportive of MRWP. Re-evaluate?", "OK") = "OK"

CALCULATION SHEET

Project No. 054409.15.025	Calculation No. 054409.15.025-M-004	Rev. 0	Page No. 8 of 16
Title: Minimum Proof Test Pressure for Conax Feedthrough to Substantiate Working Pressure Rating			
Prepared By: J.S. Huisingh	Date: 04/19/2016	Checked By: T.F. Schmitt	Date: 04/19/2016

7.0 CONCLUSIONS

The DCR calculated in Section 6.0 above does not exceed 1.0 when the "B" value above is used as the minimum cut-off hydrostatic proof test pressure. Specifically,

The required minimum cut-off test pressure for the Conax feedthrough is B_{FT} = 985 psig.

As noted above, this test pressure will support the reduced values of MAWP, which will equal or exceed the maximum rated working pressure (MRWP) for secondary hose assemblies of 170 psig (RPP-14859 Sec. 3.2.1). This parameter is sufficient to support justification for the MRWP.

8.0 REFERENCES

ASME B31.3-2014, *Process Piping*, The American Society of Mechanical Engineers, New York, NY.

ASME B36.19, 2004, *Stainless Steel Pipe*, The American Society of Mechanical Engineers, New York, NY.

ASME Section II, ASME Boiler and Pressure Vessel Code, Section II *Materials*, 2015, The American Society of Mechanical Engineers, New York, NY.

ASME Section VIII, ASME Boiler and Pressure Vessel Code, Section VIII *Rules for Construction of Pressure Vessels*, Division 1, 2015, The American Society of Mechanical Engineers, New York, NY.

ASTM A582-05, *Standard Specification for Free-Machining Stainless Steel Bars*, American Society for Testing and Materials, West Conshohocken, PA.

HTFT-668-1-12-12, Sh. 1, Rev. 1, *HIHTL Heat Trace Feed Through Assembly*, River Bend Transfer Systems, LLC, Richland, Washington.

RPP-14859, Rev. 12, *Specification for Hose-in-Hose Transfer Line and Hose Jumpers*, U.S. Department of Energy, Richland, WA.

TFC-ENG-DESIGN-C-60, Rev. A-1, *Preparation of Piping Analyses for Waste Transfer Systems*, U.S. Department of Energy, Richland, WA.

TFC-ENG-STD-21, Rev. D-9, *Hose-in-Hose Transfer Lines*, U.S. Department of Energy, Richland, WA.

TFC-ENG-STD-22, Rev. E-12, *Piping, Jumpers, and Valves*, U.S. Department of Energy, Richland, WA.

Appendix D – Minimum Proof Test Pressure for Conax Feedthrough, etc. (cont.)

ARES CORPORATION	**CALCULATION SHEET**		
Project No. 054409.15.025	Calculation No. 054409.15.025-M-004	Rev. 0	Page No. 9 of 16
Title: Minimum Proof Test Pressure for Conax Feedthrough to Substantiate Working Pressure Rating			
Prepared By: J.S. Huisingh	Date: 04/19/2016	Checked By: T.F. Schmitt	Date: 04/19/2016

ATTACHMENT 1

CONAX TECHNOLOGIES PL-12-3 CATALOG DOCUMENTATION

Appendix D – Minimum Proof Test Pressure for Conax Feedthrough, etc. (cont.)

ARES CORPORATION	CALCULATION SHEET		
Project No. 054409.15.025	Calculation No. 054409.15.025-M-004	Rev. 0	Page No. 10 of 16
Title: Minimum Proof Test Pressure for Conax Feedthrough to Substantiate Working Pressure Rating			
Prepared By: J.S. Huisingh	Date: 04/19/2016	Checked By: T.F. Schmitt	Date: 04/19/2016

5001D

PL SERIES ■ INSULATED LEADWIRE (POWER LEAD) SEALING

Conax Technologies Model PL (Power Lead) Glands seal on insulated leadwire for use in transformers, motors, conduit boxes and pressure/vacuum chambers and as power or instrument feedthroughs. The soft sealant technology seals against gases or liquids and resists element movement under pressure. Immersion length adjustments and easy replacement of elements can be accomplished in the field.

PL glands may be purchased with or without wire. If supplied with wire, solid copper wire with Kapton® insulation is standard. This is provided as 24" total with the gland centered at mid-point. Standard sealants are Grafoil or PTFE Other materials for wire and sealants can be provided for special applications. Consult your Conax Technologies sales engineer for more information on available options.

Terminals can be furnished on all wire ends if specified, at additional cost. Bulk wire is available from Conax Technologies for field assembly of PL glands. (See the Accessories Section, page 102.)

PL gland bodies with NPT threads and SAE threads are constructed from 303SST standard. Weld-neck style gland bodies are constructed from 316LSST standard. Caps and followers for all styles are constructed from 303SST standard. Many optional materials are also available, including 316LSST, Monel 405, Hastelloy C276, Inconel and more. For information on alternative materials, see page 9. Cap Style A offers a mounting thread only. Cap Style B provides threading on both ends for attachment to conduit or terminal heads.

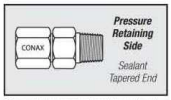

Type A has mounting thread only.

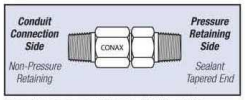

Type B has cap end threaded. B Cap NPT matches the standard mounting NPT.

Alternative sealant materials are available. Please consult a Conax Technologies sales engineer for custom needs.

- Temperature Range: -300° F to +450° F (-185° C to +232° C)
- Pressure Range: Vacuum to 10,000 PSIG (690 bar) – see Pressure Ratings in Specifications Chart.
- 600 Volts to 55 amps
- Seals 1-18 Wires
- Easy installation – no "potting"
- Wire Identification Markers applied
- Thermocouple Material conductors available, 18 gauge standard, other wire gauges optional

Accessories

The replaceable sealant permits repeated use of the same fitting. Assembly is simple and may be done in the field. Simply insert the elements and torque the cap. To replace the sealant or elements, simply loosen the cap, replace the necessary items, relubricate and retorque the cap.

Glands are supplied factory lubricated. When reused, the glands should be relubricated to maintain the published torque and pressure ratings. If glands are cleaned prior to assembly, they should be relubricated. On weld mount models, the heat from the welding process will destroy the lubricant. These models must be relubricated prior to use. See page 103 for information on our lubrication kit.

Replacement Packing Sets are available. These consist of a sealant and two insulators. Replacement sealants may also be ordered separately.

To order a Replacement Packing Set, order
RPS – (Gland) – (Wire Gauge) – (Number of Holes) – (Sealant)

Example: *RPS-PL-12-3-T*

To order a Replacement Sealant only, order
RS – (Gland) – (Wire Gauge) – (Number of Holes) – (Sealant)

Example: *RS-PL-12-3-T*

Subject sealing gland specifications

Catalog Numbering System

PL	12	B	3	G
PL Gland	*Wire Gauge*	*Cap Style*	*Number of Wires Sealed*	*Sealant*
PL	20	A – has mounting thread only	1	T – PTFE
	18	B – has cap end threaded	2	G – Grafoil
	16		3	
	14		4	
	12		6	
	10		8	
	8		10	
			12	
			18	

Modifiers are added in parentheses to indicate optional mounting methods. See specifications chart for the proper modifiers.

Other sealant materials also available.

PL Gland / Wire Gauge / Cap Style / Number of Wires Sealed / Sealant / Wire Length Cap Side / Wire Length Body Side

Example: ***PL-12-A3-T, 24/36***
(With Non-Standard Wire Length)

Example: ***PL-12-A3-T***
(With Standard Wire Length)

Example: ***PL-18(J)-A2-T, 24/36***
(With Thermocouple Material Conductors)

Example: ***PL-12-A3-T-XX***
(Without Conductors)

PL SERIES

Appendix D – Minimum Proof Test Pressure for Conax Feedthrough, etc. (cont.)

CALCULATION SHEET

Project No. 054409.15.025	Calculation No. 054409.15.025-M-004	Rev. 0	Page No. 11 of 16
Title: Minimum Proof Test Pressure for Conax Feedthrough to Substantiate Working Pressure Rating			
Prepared By: J.S. Huisingh	Date: 04/19/2016	Checked By: T.F. Schmitt	Date: 04/19/2016

INSULATED LEADWIRE (POWER LEAD) SEALING ■ PL SERIES

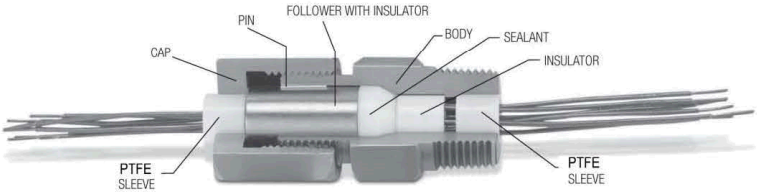

PL Selection Guide

Wire Gauge	Standard Number of Wires Offered 1	2	3	4	6	8	10	12	18
20		X	X	X	X	X			X
18	X	X	X	X	X	X	X	X	
16		X	X	X	X	X	X	X	
14	X	X	X	X	X	X	X	X	
12		X	X	X	X				
10		X	X	X					
8		X	X						

The number of wires offered is dependent on the mounting port size. See the Specifications charts on the subsequent pages for details.

Tel: 1.716.684.4500 • USA: 1.800.223.2389 • www.conaxtechnologies.com

Conax TECHNOLOGIES 41

Quality Assurance Procedure 3.1 Calculation Sheet (05-10)

Appendix D – Minimum Proof Test Pressure for Conax Feedthrough, etc. (cont.)

CALCULATION SHEET

Project No. 054409.15.025	Calculation No. 054409.15.025-M-004	Rev. 0	Page No. 12 of 16
Title: Minimum Proof Test Pressure for Conax Feedthrough to Substantiate Working Pressure Rating			
Prepared By: J.S. Huisingh	Date: 04/19/2016	Checked By: T.F. Schmitt	Date: 04/19/2016

5001D

PL SERIES ■ INSULATED LEADWIRE (POWER LEAD) SEALING

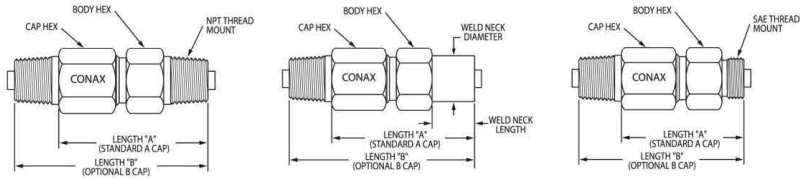

Standard NPT *Weld Neck Mount* *SAE Thread Mount*

Catalog Number	Wire Gauge	Number of Wires	Amperage Rating Per Wire	Length 'A' IN	Length 'A' MM	Length 'B' IN	Length 'B' MM	Hex Size Body IN	Hex Size Cap IN	Hex Size Body MM	Hex Size Cap MM	Pressure Rating Grafoil PSIG	Pressure Rating Grafoil BAR	Pressure Rating PTFE PSIG	Pressure Rating PTFE BAR
Standard 1/8 NPT															
PL-18-1	18	1	13	1.38	35.1	1.75	44.5	0.500	0.563	12.7	14.3	10,000	689	1,600	110
PL-14-1	14	1	24	1.38	35.1	1.75	44.5	0.500	0.563	12.7	14.3	10,000	689	800	55
Weld Neck (Weld Neck Length 0.39, Diameter 0.405)															
PL(SWM1/S316L)-18-1	18	1	13	1.38	35.1	1.75	44.5	0.500	0.563	12.7	14.3	10,000	689	1,600	110
PL(SWM1/S316L)-14-1	14	1	24	1.38	35.1	1.75	44.5	0.500	0.563	12.7	14.3	10,000	689	800	55
SAE 7/16 -20 Thread Mount (formerly MS)															
PL(MSE4/)-18-1	18	1	13	1.70	43.2	2.06	52.3	0.688	0.563	17.5	14.3	9,138	630	1,600	110
PL(MSE4/)-14-1	14	1	24	1.70	43.2	2.06	52.3	0.688	0.563	17.5	14.3	9,138	630	800	55
Standard 1/2 NPT															
PL-20-2	20	2	9	2.63	66.7	3.38	85.7	1.000	1.000	25.4	25.4	10,000	689	5,000	345
PL-20-3	20	3	9	2.63	66.7	3.38	85.7	1.000	1.000	25.4	25.4	10,000	689	5,000	345
PL-20-4	20	4	9	2.63	66.7	3.38	85.7	1.000	1.000	25.4	25.4	10,000	689	5,000	345
PL-18-2	18	2	13	2.63	66.7	3.38	85.7	1.000	1.000	25.4	25.4	10,000	689	4,000	276
PL-18-3	18	3	13	2.63	66.7	3.38	85.7	1.000	1.000	25.4	25.4	10,000	689	4,000	276
PL-18-4	18	4	13	2.63	66.7	3.38	85.7	1.000	1.000	25.4	25.4	10,000	689	4,000	276
PL-16-2	16	2	17	2.63	66.7	3.38	85.7	1.000	1.000	25.4	25.4	10,000	689	3,000	207
PL-16-3	16	3	17	2.63	66.7	3.38	85.7	1.000	1.000	25.4	25.4	10,000	689	3,000	207
PL-16-4	16	4	17	2.63	66.7	3.38	85.7	1.000	1.000	25.4	25.4	10,000	689	3,000	207
PL-14-2	14	2	24	2.63	66.7	3.38	85.7	1.000	1.000	25.4	25.4	10,000	689	1,500	103
PL-14-3	14	3	24	2.88	73.0	3.63	92.1	1.125	1.250	28.6	31.8	10,000	689	2,000	138
PL-14-4	14	4	24	2.88	73.0	3.63	92.1	1.125	1.250	28.6	31.8	10,000	689	1,600	110
Optional 1/4 NPT															
PL(PTM2/)-20-2	20	2	9	2.63	66.7	3.38	85.7	1.000	1.000	25.4	25.4	10,000	689	5,000	345
PL(PTM2/)-20-3	20	3	9	2.63	66.7	3.38	85.7	1.000	1.000	25.4	25.4	10,000	689	5,000	345
PL(PTM2/)-20-4	20	4	9	2.63	66.7	3.38	85.7	1.000	1.000	25.4	25.4	10,000	689	5,000	345
PL(PTM2/)-18-2	18	2	13	2.63	66.7	3.38	85.7	1.000	1.000	25.4	25.4	10,000	689	4,000	276
PL(PTM2/)-18-3	18	3	13	2.63	66.7	3.38	85.7	1.000	1.000	25.4	25.4	10,000	689	4,000	276
PL(PTM2/)-18-4	18	4	13	2.63	66.7	3.38	85.7	1.000	1.000	25.4	25.4	10,000	689	4,000	276
PL(PTM2)-16-2	16	2	17	2.63	66.7	3.38	85.7	1.000	1.000	25.4	25.4	10,000	689	3,000	207
PL(PTM2)-16-3	16	3	17	2.63	66.7	3.38	85.7	1.000	1.000	25.4	25.4	10,000	689	3,000	207
PL(PTM2)-16-4	16	4	17	2.63	66.7	3.38	85.7	1.000	1.000	25.4	25.4	10,000	689	3,000	207
PL(PTM2)-14-2	14	2	24	2.63	66.7	3.38	85.7	1.000	1.000	25.4	25.4	10,000	689	1,500	103

Note: the pressure and torque ratings provided in this catalog apply only when bores are drilled by Conax Technologies.
** Hex size for the body and cap are the same unless a cap size is provided in parentheses.*
*** Weld neck models require lubrication prior to use.*

42 Conax TECHNOLOGIES Tel: 1.716.684.4500 • USA: 1.800.223.2389 • www.conaxtechnologies.com

Quality Assurance Procedure 3.1 Calculation Sheet (05-10)

Appendix D – Minimum Proof Test Pressure for Conax Feedthrough, etc. (cont.)

CALCULATION SHEET

Project No. 054409.15.025	Calculation No. 054409.15.025-M-004	Rev. 0	Page No. 13 of 16
Title: Minimum Proof Test Pressure for Conax Feedthrough to Substantiate Working Pressure Rating			
Prepared By: J.S. Huisingh	Date: 04/19/2016	Checked By: T.F. Schmitt	Date: 04/19/2016

5001D

INSULATED LEADWIRE (POWER LEAD) SEALING ■ PL SERIES

Catalog Number	Wire Gauge	Number of Wires	Amperage Rating Per Wire	Length 'A' IN	Length 'A' MM	Length 'B' IN	Length 'B' MM	Hex Size Body IN	Hex Size Cap IN	Hex Size Body MM	Hex Size Cap MM	Pressure Rating Grafoil PSIG	Pressure Rating Grafoil BAR	Pressure Rating PTFE PSIG	Pressure Rating PTFE BAR
Weld Neck (Weld Neck Length 0.78", Diameter 0.840")															
PL(SWM4/S316L)-20-2	20	2	9	2.63	66.7	3.38	85.7	1.000	1.000	25.4	25.4	10,000	689	5,000	345
PL(SWM4/S316L)-20-3	20	3	9	2.63	66.7	3.38	85.7	1.000	1.000	25.4	25.4	10,000	689	5,000	345
PL(SWM4/S316L)-20-4	20	4	9	2.63	66.7	3.38	85.7	1.000	1.000	25.4	25.4	10,000	689	5,000	345
PL(SWM4/S316L)-18-2	18	2	13	2.63	66.7	3.38	85.7	1.000	1.000	25.4	25.4	10,000	689	4,000	276
PL(SWM4/S316L)-18-3	18	3	13	2.63	66.7	3.38	85.7	1.000	1.000	25.4	25.4	10,000	689	4,000	276
PL(SWM4/S316L)-18-4	18	4	13	2.63	66.7	3.38	85.7	1.000	1.000	25.4	25.4	10,000	689	4,000	276
PL(SWM4/S316L)-16-2	16	2	17	2.63	66.7	3.38	85.7	1.000	1.000	25.4	25.4	10,000	689	3,000	207
PL(SWM4/S316L)-16-3	16	3	17	2.63	66.7	3.38	85.7	1.000	1.000	25.4	25.4	10,000	689	3,000	207
PL(SWM4/S316L)-16-4	16	4	17	2.63	66.7	3.38	85.7	1.000	1.000	25.4	25.4	10,000	689	3,000	207
PL(SWM4/S316L)-14-2	14	2	24	2.63	66.7	3.38	85.7	1.000	1.000	25.4	25.4	10,000	689	1,500	103
PL(SWM4/S316L)-14-3	14	3	24	2.88	73.0	3.63	92.1	1.125	1.250	28.6	31.8	10,000	689	2,000	138
PL(SWM4/S316L)-14-4	14	4	24	2.88	73.0	3.63	92.1	1.125	1.250	28.6	31.8	10,000	689	1,600	110
SAE 3/4-16 Thread Mount (formerly MS)															
PL(MSE8/)-20-2	20	2	9	2.63	66.7	3.38	85.7	1.000	1.000	25.4	25.4	9,138	630	5,000	345
PL(MSE8/)-20-3	20	3	9	2.63	66.7	3.38	85.7	1.000	1.000	25.4	25.4	9,138	630	5,000	345
PL(MSE8/)-20-4	20	4	9	2.63	66.7	3.38	85.7	1.000	1.000	25.4	25.4	9,138	630	5,000	345
PL(MSE8/)-18-2	18	2	13	2.63	66.7	3.38	85.7	1.000	1.000	25.4	25.4	9,138	630	4,000	276
PL(MSE8/)-18-3	18	3	13	2.63	66.7	3.38	85.7	1.000	1.000	25.4	25.4	9,138	630	4,000	276
PL(MSE8/)-18-4	18	4	13	2.63	66.7	3.38	85.7	1.000	1.000	25.4	25.4	9,138	630	4,000	276
PL(MSE8/)-16-2	16	2	17	2.63	66.7	3.38	85.7	1.000	1.000	25.4	25.4	9,138	630	3,000	207
PL(MSE8/)-16-3	16	3	17	2.63	66.7	3.38	85.7	1.000	1.000	25.4	25.4	9,138	630	3,000	207
PL(MSE8/)-16-4	16	4	17	2.63	66.7	3.38	85.7	1.000	1.000	25.4	25.4	9,138	630	3,000	207
PL(MSE8/)-14-2	14	2	24	2.63	66.7	3.38	85.7	1.000	1.000	25.4	25.4	9,138	630	1,500	103
SAE 7/8-14 Thread Mount (formerly MS)															
PL(MSE10/)-14-3	14	3	24	2.88	73.0	3.63	92.1	1.125	1.250	28.6	31.8	7,600	524	2,000	138
PL(MSE10/)-14-4	14	4	24	2.88	73.0	3.63	92.1	1.125	1.250	28.6	31.8	7,600	524	1,600	110
Standard 3/4 NPT															
PL-20-6	20	6	9	2.88	73.0	3.63	92.1	1.125	1.250	28.6	31.8	10,000	689	3,200	220
PL-20-8	20	8	9	2.88	73.0	3.63	92.1	1.125	1.250	28.6	31.8	10,000	689	3,200	220
PL-20-18	20	18	9	2.88	73.0	3.63	92.1	1.250	1.500	31.8	38.1	10,000	689	2,400	165
PL-18-6	18	6	13	2.88	73.0	3.63	92.1	1.125	1.250	28.6	31.8	10,000	689	2,700	186
PL-18-8	18	8	13	2.88	73.0	3.63	92.1	1.125	1.250	28.6	31.8	10,000	689	2,700	186
PL-18-10	18	10	13	2.88	73.0	3.63	92.1	1.250	1.500	31.8	38.1	10,000	689	2,100	145
PL-18-12	18	12	13	2.88	73.0	3.63	92.1	1.250	1.500	31.8	38.1	10,000	689	2,100	145
PL-16-6	16	6	17	2.88	73.0	3.63	92.1	1.125	1.250	28.6	31.8	10,000	689	2,700	186
PL-16-8	16	8	17	2.88	73.0	3.63	92.1	1.125	1.250	28.6	31.8	10,000	689	2,700	186
PL-16-10	16	10	17	2.88	73.0	3.63	92.1	1.250	1.500	31.8	38.1	10,000	689	1,700	117
PL-16-12	16	12	17	2.88	73.0	3.63	92.1	1.250	1.500	31.8	38.1	10,000	689	1,700	117
PL-14-6	14	6	24	2.88	73.0	3.63	92.1	1.125	1.250	28.6	31.8	10,000	689	1,600	110
PL-14-8	14	8	24	2.88	73.0	3.63	92.1	1.125	1.250	28.6	31.8	10,000	689	1,600	110
PL-14-10	14	10	24	2.88	73.0	3.63	92.1	1.250	1.500	31.8	38.1	10,000	689	1,400	96
PL-14-12	14	12	24	2.88	73.0	3.63	92.1	1.250	1.500	31.8	38.1	10,000	689	1,400	96
PL-12-2	12	2	30	2.88	73.0	3.63	92.1	1.125	1.250	28.6	31.8	8,800	606	1,200	83
PL-12-3	12	3	30	2.88	73.0	3.63	92.1	1.125	1.250	28.6	31.8	8,800	606	1,200	83
PL-12-4	12	4	30	2.88	73.0	3.63	92.1	1.125	1.250	28.6	31.8	8,800	606	1,200	83
PL-12-6	12	6	30	2.88	73.0	3.63	92.1	1.125	1.250	28.6	31.8	8,800	606	1,200	83
PL-10-2	10	2	40	2.88	73.0	3.63	92.1	1.125	1.250	28.6	31.8	8,000	551	1,200	83
PL-10-3	10	3	40	2.88	73.0	3.63	92.1	1.125	1.250	28.6	31.8	8,000	551	1,200	83
PL-10-4	10	4	40	2.88	73.0	3.63	92.1	1.125	1.250	28.6	31.8	8,000	551	1,200	83
PL-8-2	8	2	55	2.88	73.0	3.63	92.1	1.125	1.250	28.6	31.8	8,000	551	800	55
PL-8-3	8	3	55	2.88	73.0	3.63	92.1	1.250	1.500	31.8	38.1	8,000	551	800	55

All pressure and torque ratings were determined at 68° F (20° C) using solid Kapton-insulated copper conductors as the element. Pressure ratings may degrade at higher temperatures. Pressure rating guide values are provided for glands with elements restrained by the compressed sealant. Higher pressure may be attained with additional element restraints. Tolerance of tube or probe diameter is ±0.005. Deviation from the nominal may affect pressure ratings.

Tel: 1.716.684.4500 • USA: 1.800.223.2389 • www.conaxtechnologies.com

Conax TECHNOLOGIES 43

Quality Assurance Procedure 3.1 Calculation Sheet (05-10)

CALCULATION SHEET

Project No. 054409.15.025	Calculation No. 054409.15.025-M-004	Rev. 0	Page No. 14 of 16
Title: Minimum Proof Test Pressure for Conax Feedthrough to Substantiate Working Pressure Rating			
Prepared By: J.S. Huisingh	Date: 04/19/2016	Checked By: T.F. Schmitt	Date: 04/19/2016

ATTACHMENT 2

CORRESPONDENCE WITH CONAX TECHNOLOGIES REGARDING PL-12-3 PROPERTIES

Appendix D – Minimum Proof Test Pressure for Conax Feedthrough, etc. (cont.)

ARES CORPORATION

CALCULATION SHEET

Project No. 054409.15.025	Calculation No. 054409.15.025-M-004	Rev. 0	Page No. 15 of 16
Title: Minimum Proof Test Pressure for Conax Feedthrough to Substantiate Working Pressure Rating			
Prepared By: J.S. Huisingh	Date: 04/19/2016	Checked By: T.F. Schmitt	Date: 04/19/2016

Jeffrey Huisingh

From: James Treadway [jtreadway@conaxtechnologies.com]
Sent: Monday, February 01, 2016 1:43 PM
To: Jeffrey Huisingh
Cc: Brian Armstrong
Subject: RE: QUESTIONS REGARDING CONAX PL CONSTRUCTION

Hi Jeff,

That is correct.

Thanks,

Jim

From: Jeffrey Huisingh [mailto:jhuisingh@arescorporation.com]
Sent: Monday, February 01, 2016 4:29 PM
To: James Treadway
Cc: Brian Armstrong
Subject: RE: QUESTIONS REGARDING CONAX PL CONSTRUCTION

Jim:

To clarify on the first bullet below: Would that material more specifically correspond to UNS S30300?

Jeff

From: James Treadway [mailto:jtreadway@conaxtechnologies.com]
Sent: Monday, February 01, 2016 8:24 AM
To: Jeffrey Huisingh
Cc: Brian Armstrong
Subject: RE: QUESTIONS REGARDING CONAX PL CONSTRUCTION

Hi Jeff,

Please find answers below in red.

Thank you,

Jim

From: Jeffrey Huisingh [mailto:jhuisingh@arescorporation.com]
Sent: Friday, January 29, 2016 3:17 PM
To: JTreadway@ConaxTechnologies.com
Subject: QUESTIONS REGARDING CONAX PL CONSTRUCTION

Jim:

Thanks for assisting me with these questions.

1

Quality Assurance Procedure 3.1 Calculation Sheet (05-10)

Appendix D – Minimum Proof Test Pressure for Conax Feedthrough, etc. (cont.)

CALCULATION SHEET

Project No. 054409.15.025	Calculation No. 054409.15.025-M-004	Rev. 0	Page No. 16 of 16
Title: Minimum Proof Test Pressure for Conax Feedthrough to Substantiate Working Pressure Rating			
Prepared By: J.S. Huisingh	Date: 04/19/2016	Checked By: T.F. Schmitt	Date: 04/19/2016

We expect that we will be needing to do some pressure testing on an installation in which a PL-12-3 with ¾ MNPT threads (PL-12-B 3G, 12/12) will be installed in a modified B16.5 Class 150 blind flange. In order to support the establishment of appropriate testing parameters, I will need to gather some information from Conax regarding the following information if we can:

- Would you please confirm that the 303 stainless body is seamless (although this is obviously the case)? Confirmed the body is 303 SS and is seamless.
- Would you please provide the particular material specification (e.g., A182) with which the body is made? 303 SST, Cold finished and annealed per ASTM A582
- For the sake of performing simplified calculations, would you please provide the dimension values indicated in Figure 1 below? (The following dimensions are being requested based on the understanding that the presence of the sealant will confine all pressure to the region that is bounded by the cross section of the sealant shown in Figure 1. In this figure, r_1 is the largest inner radius of the body that the sealant contacts, and r_2 is the smallest outer radius of the body [i.e., to the flat of the hex] in the plane passing through the corner point indicated by the vertical purple line.) R1 = .343", R2 = .5575"

Figure 1. Requested Radial Dimensions.

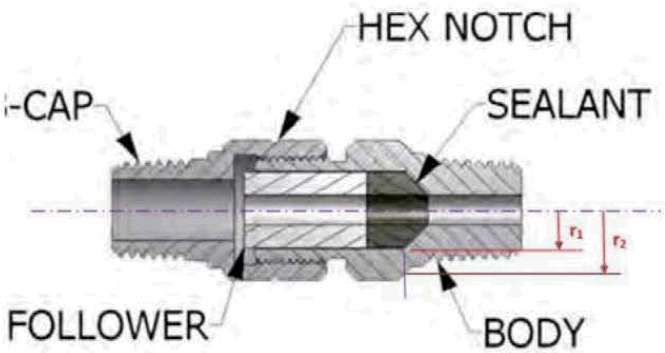

Thank you very much for your assistance with these requests.

Respectfully,

Jeff Huisingh
ARES Corporation
(509) 946-3300

2

Quality Assurance Procedure 3.1 Calculation Sheet (05-10)