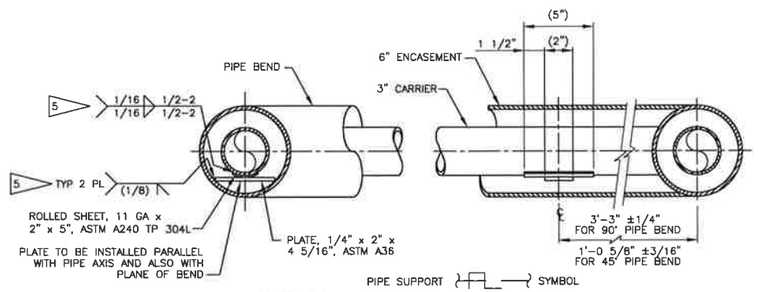

DETAIL PIPE SUPPORT (AT BENDS)
1 SH 1 SCALE: 3"=1'-0"
H-14-111322
H-14-111372

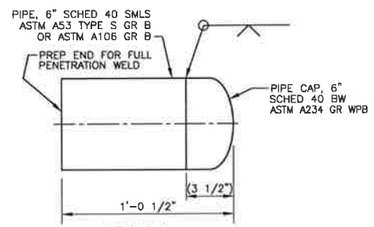

DETAIL ENCASEMENT CAP SPOOL
7 SCALE: 3"=1'-0"

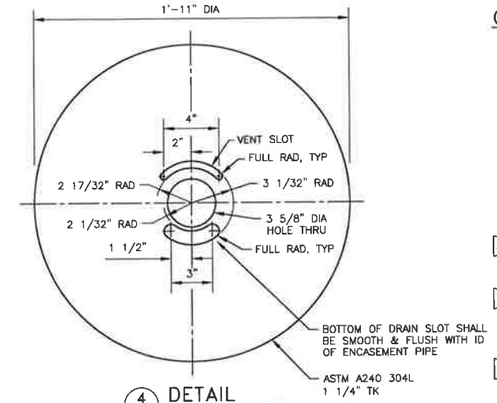

DETAIL
4 SCALE: 3"=1'-0"

GENERAL NOTES:

1. TOLERANCES FOR THIS SHEET (UNLESS NOTED OTHERWISE):
   FRACTIONAL: ±1/16"
   ANGULAR: ±5°
2. INSTALL INSULATION FIELD JOINT SLEEVE PER MANUFACTURER'S INSTRUCTIONS.
3. FIELD INSTALLATION OF INSULATION SHALL BE IN ACCORDANCE WITH CONSTRUCTION SPECIFICATION RPP-SPEC-62663.
4. WELD AND INSPECT PIPING IN ACCORDANCE WITH ASME B31.3, 2016, FOR CATEGORY "NORMAL FLUID SERVICE". NOT LESS THAN 5% OF CIRCUMFERENTIAL BUTT AND MITER GROOVE CONTAINMENT BOUNDARY WELDS SHALL BE EXAMINED FULLY BY RANDOM RADIOGRAPHY (RT) IN ACCORDANCE WITH ASME B31.3, 2016, PARAGRAPH 344.5. ALL WELDS NOT EXAMINED BY RT SHALL HAVE A VT EXAMINATION ON FINAL PASS UNLESS OTHERWISE SPECIFIED. USE OF BACKING RINGS IS NOT PERMITTED.

5 ASME B31.3 PRESSURE BOUNDARY OR PRESSURE BOUNDARY ATTACHMENT WELD. WELD FILLER MATERIAL IS "SAFETY SIGNIFICANT". ALL ITEMS NOT IDENTIFIED AS "SAFETY SIGNIFICANT" ARE GENERAL SERVICE.

6 WELD AND INSPECT STRUCTURAL WELDS IN ACCORDANCE WITH AWS D1.1, 2015 OR AWS D1.6, 2017 "STATICALLY LOADED" CRITERIA. ALL WELDS SHALL BE VI ON FINAL PASS UNLESS OTHERWISE SPECIFIED. WELD PROCEDURES AND QUALIFICATIONS PER ASME B&PV CODE SECTION IX, 2017 ARE ACCEPTABLE.

7 IN PROCESS WELD EXAMINATION PER ASME B31.3 PARA 344.7.

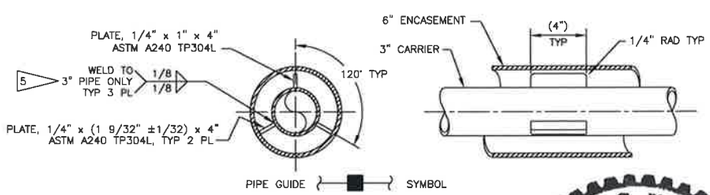

DETAIL-3" PIPE GUIDE
2 SH 1 SCALE: 3"=1'-0"
H-14-111322
H-14-111372

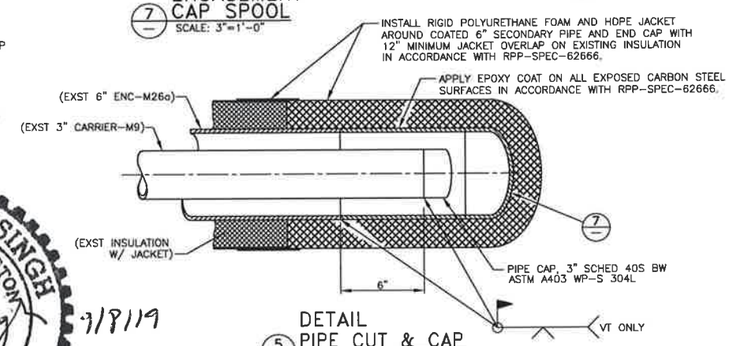

DETAIL PIPE CUT & CAP
5 SH 1 SCALE: 3"=1'-0"
H-14-104899
H-14-104900
H-14-104971

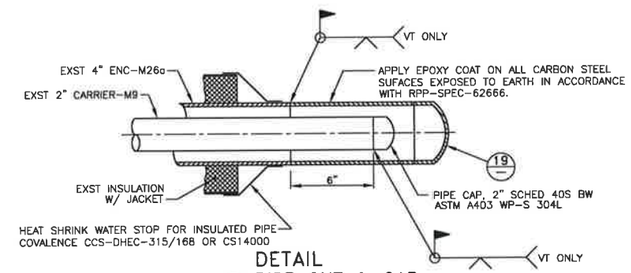

DETAIL PIPE CUT & CAP
18 SH 1 SCALE: 3"=1'-0"
H-2-90558

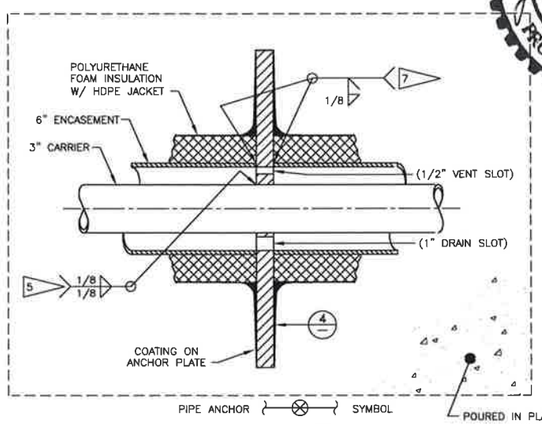

POURED IN PLACE CONCRETE AROUND ANCHOR PLATE IN ACCORDANCE WITH ISOMETRIC VIEWS AT RIGHT AND CONSTRUCTION SPEC RPP-SPEC-62663

DETAIL-3"ANCHOR
3 SH 1 SCALE: 3"=1'-0"
H-14-111322
H-14-111372

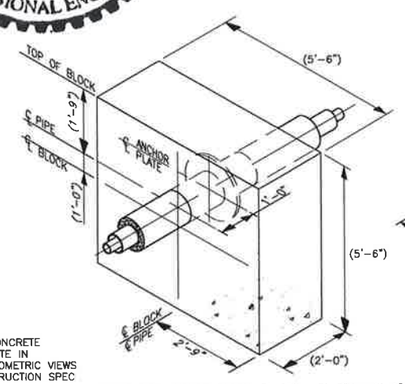

SINGLE PIPE ANCHOR BLOCK: 5'-6"W x 5'-6"H x 2'-0"THK W/ #5 @ 12 EWEF WITH 3" EARTH COVER MINIMUM.

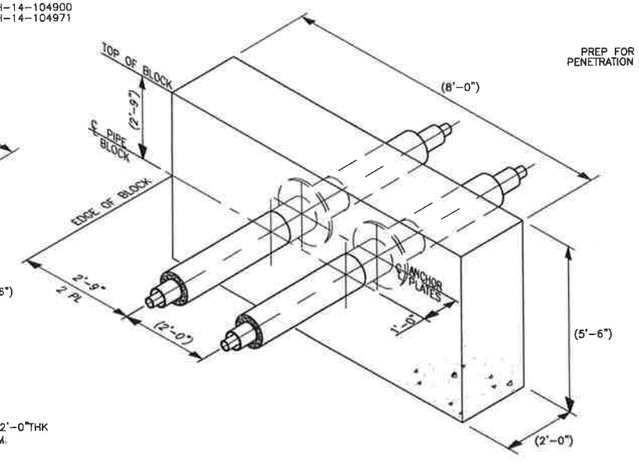

DOUBLE PIPE ANCHOR BLOCK: 8'-0"W x 5'-6"H x 2'-0"THK W/ #5 @ 12 EWEF WITH 3" EARTH COVER MINIMUM.

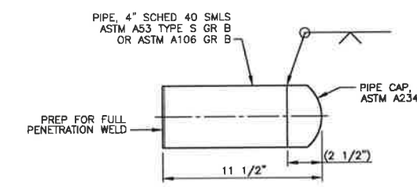

DETAIL ENCASEMENT CAP SPOOL
19 SCALE: 3"=1'-0"

JEFFREY S. HUISINGH STATE OF WASHINGTON 31406 REGISTERED PROFESSIONAL ENGINEER 7/8/19

PETER PAULINO SANTOS STATE OF WASHINGTON 41951 REGISTERED PROFESSIONAL ENGINEER 06-29-20

DATE: Aug 20, 2019 HANFORD RELEASE

DWG NUMBER	TITLE
DRAWING TRACEABILITY LIST	

REF NUMBER	TITLE
H-14-111376	AP FARM UPGRADES DRAWING LIST
REFERENCES	
NEXT USED ON END ITEM	

REV NO.	DESCRIPTION
0	RELEASED PER EDT-882029
REVISIONS	

BLDG. NO. 241-AP
WBS NO. 8511
CAUTION: NOT COMPLETE WITHOUT CURRENT CHANGE DOCUMENTS FROM DATABASE

	NAME	DATE
DRAWN	R. J. LAMOUREUX	
DESIGN SUPERVISOR	W. T. ARNDT	
DESIGN AUTHORITY	J. P. WITHERSPOON	

U.S. DEPARTMENT OF ENERGY
Office of River Protection

PIPING DETAILS
AP FARM YARD PIPING

SIZE F | DRAWING NUMBER H-14-111373 | SHEET 1 | REV 00
SCALE SHOWN
29262