RPP-CALC-62660
Revision 0

Low Activity Waste (LAW) Feed Buried Structural Supports

Prepared by

PP Santos
Atkins Energy Federal EPC, Inc. (by ARES Corporation) for Washington River Protection Solutions, LLC

Date Published
July 2019

Prepared for the U.S. Department of Energy
Office of River Protection

Contract No. DE-AC27-08RV14800

Approved for Public Release;
Further Dissemination Unlimited

ARES CORPORATION	**RPP-CALC-62660, Rev. 0** **CALCULATION COVER SHEET**	Page No. 1 of 58 Date 07/17/2019 Rev. No. 1 Calculation No: 078907.18.01-S-001

Project No.	Project Title:	Client:
078907.18.01	Design of W-211 Transfer Lines Modifications for Waste Feed	ATKINS

Title:
Low Activity Waste (LAW) Feed Buried Structural Supports

Purpose and Objective:
This calculation provides structural evaluation of the below grade pipe support configuration that feeds the Low Activity Waste (LAW) Facility.

Rev. No.	Total Pages		Prepared By	Checked By	PM/TL
0	58	Print Name/ Sign:	PP Santos, P.E., PmP	RB Campbell, P.E.	PM Dorsh, P.E.
		Date:	06/26/19	06/26/19	06/26/19

Revision Description (Revision Description/Affected Pages):
Original issue.

1	58	Print Name/ Sign:	PP Santos, P.E., PmP	RB Campbell, P.E.	PM Dorsh, P.E.
		Date:	07-17-19	7/17/19	7/17/19

Revision Description (Revision Description/Affected Pages):
Changed R_p value in Section 8.4.1 to reflect SDC-2 Limit State C per Table 5 of TFC-ENG-STD-06 (e.g., $R_p = R/1.2$).

ARES CORPORATION

RPP-CALC-62660, Rev. 0

CALCULATION REVIEW CHECKLIST

Project No.	Calculation No.	Rev.	Page No.
078907.18.01	078907.18.01-S-001	1	2 of 58

Items Checked	Accept Y	Accept N	Accept N/A	Description of Resolution for Unacceptable Items
1. Cover sheets properly completed.	√			
2. Calculation sheet headers complete with calculation number, revision number, etc.	√			
3. Calculation sheet contents are legible, accurate, and complete per format.	√			
4. Listed attachments included.			√	
5. Calculation objective clearly described.	√			
6. Criteria are suitable and properly referenced to task specific documents.	√			
7. Assumptions and input data selected, described, reasonable, and attached or referenced to task documents.	√			
8. Calculation method identified and appropriate for the design activity.	√			
9. Calculation results reasonable and correctly described in results and conclusions.	√			
10. Physical property calculations generated by CAD software verified via hand calculations.			√	
11. Computer program identified with version and revision.			√	
12. Computer input/output provided or referenced and reasonable.			√	
13. Computer run traceable to calculation (file #, etc.).			√	
14. Computer input data and problem type within validation/verification range of use.			√	
15. Computer program validation/verification addressed.			√	
16. Computer operating system in use for calculation preparation is the same as when the software was verified on machine.			√	

Calculation Checking Method	√	Applicable Pages
1. Direct Step-by-Step Check	√	All sheets.
2. Reference Chart(s) or Book(s) Comparison (Append Documentation)		
3. Alternate Calculation (Append Documentation)		

Comments:

Preparer (Print Name and Sign):	Date:
PP Santos, P.E., PmP	07-17-19
Checker (Print Name and Sign):	**Date:**
RB Campbell, P.E. Richard Campbell	7/17/19

Signatures obtained only after discrepancies are corrected and comments are resolved.

TABLE OF CONTENTS

1.0 PURPOSE 4
2.0 METHODOLOGY 4
3.0 DESIGN INPUTS 4
4.0 ASSUMPTIONS 4
5.0 COMPUTER SOFTWARE 4
6.0 RESULTS 4
7.0 REFERENCES 7
8.0 CALCULATIONS 8

1.0 PURPOSE

This calculation provides structural evaluation of the Low Activity Waste (LAW) pipe support configuration.

2.0 METHODOLOGY

Structural loads used on this evaluation are given in RPP-CALC-62528, *Tie-In Transfer Piping B31.3 Evaluation*. Seismic loading on the pipes supports is determined in accordance with ASCE 7-10, *Minimum Design Loads for Buildings and Other Structures*, with input from TFC-ENG-STD-06, *Design Loads for Tank Farm Facilities*.

The capacity of the new pipe supports is determined in accordance with ANSI/AISC 360-10, *Steel Construction Manual, 14th Edition* and ACI 318-14, *Building Code Requirements for Structural Concrete*.

3.0 DESIGN INPUTS

1. The LAW transfer lines below grade piping shall be designed to Seismic Design Category (SDC-2) criteria, Limit State C per TFC-ENG-STD-06.
2. Dimensions and properties of the pipe supports are per H-14-111373, Sheet 1, Rev. 0, *Piping Details, AP Farm Yard Piping*.
3. Loading criteria is based on ASCE 7-10 and TFC-ENG-STD-06.
4. Pipe loading on the supports is per RPP-CALC-62528. Note that RPP-HOLD-57900 has been applied to RPP-CALC-62528 due to WTP pipe interface uncertainties. Therefore, this RPP-HOLD-57900 will also apply to this analysis.
5. The friction factor used for soil/concrete is 0.25 per IBC 2015, Table 1806.2.

4.0 ASSUMPTIONS

None.

5.0 COMPUTER SOFTWARE

No unverified computer software was used in this analysis. Mathcad®[1] release 15.0 was used for the hand calculations and was checked using a handheld calculator.

6.0 RESULTS

The pipe support structures as shown on the drawings are adequate for the various dead, live, and seismic loading. Table 6.0-1 summarizes the Demand Capacity Ratio.

1 Mathcad is a registered trademark of Parametric Technology Corporation., Needham, Massachusetts.

Table 6.0-1 -Demand-Capacity Ratio Summary Table

Number	Nomenclature	Load Condition or Load Combination	Critical Mode	Required Load	Factored Capacity	Demand-Capacity Ratio
1	V- Stop – Net Section	RPP-CALC_62528, Table 7-2	Flexure	17.996 ft-lbf	56.138 ft-lbf	0.321
2	V-Stop – Net Section	RPP-CALC_62528, Table 7-2	Shear	100.306 lbf	6467 lbf	0.016
3	Pipe Guide – Net Section	RPP-CALC_62528, Table 7-2	Flexure	56.27 ft-lbf	77.969 ft-lbf	0.722
4	Pipe Guide – Net Section	RPP-CALC_62528, Table 7-2	Shear	1.38 kip	8.982 kip	0.154
5	Pipe Guide – Net Section	RPP-CALC_62528, Table 7-2	Combined Axial Compression and Flexure	P_r = 1.536 kip M_{rx} = 0 ft-lbf M_{ry} = 56.27 ft-lbf	P_c = 14.328 kip M_{cx} = 1248 ft-lbf M_{cy} = 77.969 ft-lbf	0.775
6	Anchor Plate common to vent and drain slot ends (Section C-C)	RPP-CALC_62528, Table 7-1	Combined Stresses	P_r = 0.663 kip M_r = 0.055 ft-kip V_r = 11.38 kip τ_{max} = 2.041 ksi	P_n = 34.357kip M_n = 0.935 ft-kip V_n = 21.538 kip F_T = 8.982 ksi	0.65
7	Anchor Plate common to HPDE jacket and concrete Interface (Section D-D)	RPP-CALC_62528, Table 7-1	Flexure	9.586 ksi	14.97ksi	0.64
8	Anchor Plate common to the 3” pipe and vent slot (Section E-E)	RPP-CALC_62528, Table 7-1	Strong Axis Shear	2.037 kip	16.14 kip	0.126
9	Anchor Plate common to the 3” pipe and vent slot (Section E-E)	RPP-CALC_62528, Table 7-1	Weak Axis Shear	0.213 kip	8.07 kip	0.026

10	Anchor Plate common to the 3” pipe and drain slot (Section E-E)	RPP-CALC_62528, Table 7-1	Strong Axis Shear	0.473 kip	4.912 kip	0.096
11	Anchor Plate common to the 3” pipe and drain slot (Section E-E)	RPP-CALC_62528, Table 7-1	Weak Axis Shear	0.065 kip	2.456 kip	0.026
12	Concrete Block – Single transfer line		Sliding	2.52 kip/ft	2.979 kip/ft	0.846
13	Concrete Block – Single transfer line		Soil Bearing	9.876 kip	22 kip	0.449
14	Concrete Block – Dual Transfer line		Sliding	3.608 kip/ft	3.923 kip/ft	0.92
15	Concrete Block – Dual Transfer line		Soil Bearing	15.311 kip	32 kip	0.478
16	Concrete Block		Punching Shear	11.678 psi	201.246 psi	0.06
17	3” Carrier Pipe to Anchor Plate Round Fillet Weld	RPP-CALC_62528, Table 7-1	Weld	14.127 ksi	21 ksi	0.34
18	6” Carrier Pipe to Anchor Plate Round Fillet Weld	RPP-CALC_62528, Table 7-1	Weld	17.969 ksi	21 ksi	0.86
19	6” Pipe to Anchor Plate Single Fillet Weld	RPP-CALC_62528, Table 7-1	Weld	5.2 ksi	21 ksi	0.25
20	3” Carrier Pipe to Pipe Guide Double Fillet Weld	RPP-CALC_62528, Table 7-1	Weld	0.4 ksi	21 ksi	0.018

No. 5 Reinforcement bars at 12 in spacing were added to the concrete collars, Each Way, Each Face (EWEF), for minimum reinforcement criteria and to control shrinkage. Minimum cover for the reinforcement is 3”.

7.0 REFERENCES

ACI 318-14, *Building Code Requirements for Structural Concrete*, American Concrete Institute, Farmington Hills, MI.

ANSI/AISC 360-10, *Specification for Structural Steel Buildings*, American Institute of Steel Construction, Inc., Chicago, IL.

ASCE 7-2010, *Minimum Design Loads for Buildings and Other Structures*, American Society of Civil Engineers, Reston, VA, 2013, ISBN 978-0-7844-1291-6.

ASTM A240/240M – 16a, *Standard Specification for Chromium and Chromium-Nickel Stainless Steel Plate, Sheet, and Strip for Pressure Vessels and for General Applications*, ASTM International.

ASTM A36/A36M – 14, *Standard Specification for Carbon Structural Steel*, ASTM International.

IBC 2015, *International Building Code*, International Code Council, USA.

Blodgett, Omer W., *Design of Welded Structures*, 14th Printing, 1991, The James F. Lincoln Arc Welding Foundation, Cleveland, OH.

Lindeburg, Michael R., *Civil Engineering Reference Manual*, 8th Edition, Professional Publications, Inc., Belmont, CA, 2001, ISBN 1-888577-66-5.

Young, Warren C. and Budynas, Richard G., *Roark's Formulas for Stress and Strain*, 7th Edition, McGraw-Hill, Inc., USA, ISBN 0-07-072542-X.

H-14-111373, Sh. 1, Rev. 0, *Piping Details, AP Farm Yard Piping*, U.S. Department of Energy, Richland, WA.

RPP-CALC-62528 Rev. 0, *Tie-In Transfer Piping B31.3 Evaluation,* U.S. Department of Energy, Richland, WA.

TFC-ENG-STD-06, Rev D-0, *Design Loads for Tank Farm Facilities*, September 2017, Washington River Protection Solutions, LLC., Richland, WA.

8.1 - PIPE SUPPORT (AKA V-STOP)

8.1.1 - GEOMETRIC PROPERTIES:

$t_{pipe_support} := \frac{1}{4}in$

Plate thickness of pipe support.
(H-14-111373, Sht. 1, Detail 1, Zone E8)

$l_{pipe_support} := 2in$

Plate length of pipe support.
(H-14-111373, Sht.1, Detail 1, Zone E8)

$w_{pipe_support} := 4in + \frac{5}{16}in = 4.313 \cdot in$

Plate width of pipe support.
(H-14-111373, Sht. 1, Detail 1, Zone E8)

8.1.2 - MATERIAL PROPERTIES:

$\rho_{A36} := 490pcf = 0.284 \cdot pci$

Density of ASTM A36 Steel.

$E_{A36} := 29000ksi$

Modulus of elasticity of steel
(ANSI/AISC 360-10, Table B4.1b).

$F_{y_A36} := 36ksi$

Yield Strength of ASTM A36 Steel.
(ASTM A36/A36M - 14, Table 2)

8.1.3 - APPLIED LOADS

8.1.3.1 - Lateral and Vertical

Table 8.1.3-1 - Maximum Guide and V-Stop Reaction Loads

Support Type	Line Size (in)	Lateral Horizontal Force (lbf) P_H	Vertical (downward) Force (lbf) P_V
V-Stop	3	N/A	177

(RPP-CALC-62528, Table 7-2, *Bounding Carrier Support Reaction Loads*, page 28)

$P_{V_stop} := 200lbf$

NOTE: Loads will be rounded up for conservatism.

8.1.4 - SECTION CHECKS

8.1.4.1 - FLEXURAL BENDING IN PLATE AT SECTION A-A

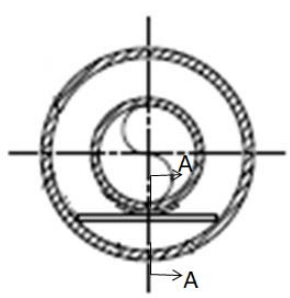

NOTE: The plate is critical in bending at section A-A. Guide is welded on both sides of plate onto the 6" pipe. Rolled sheet, 11 GA acts as a filler and transmits load onto plate in bearing.

8.1.4.2 - MOMENTS AND SHEARS

NOTE: The plate is a simple beam with applied uniform dead load (DL), ANSI/AISC 360-10 Table 3-23 Case 1 - Simple Beam - Uniformly Distributed load due to weight and concentrated live load (LL), Case 7 - Simple Beam - Concentrated Load at Center.

$DL := \rho_{A36} \cdot l_{pipe_support} \cdot t_{pipe_support} = 0.142 \cdot \frac{lbf}{in}$ Dead load due to pipe support weight.

$LL := \left| P_{V_stop} \right| = 200\ lbf$ Live Load.

$L_{beam} := w_{pipe_support} = 4.313 \cdot in$ Beam span.

$V_r := \frac{DL \cdot L_{beam}}{2} + \frac{LL}{2} = 100.306\ lbf$ Required shear due to dead load and live load. (ANSI/AISC 360-10, Table 3-23)

$M_r := \frac{DL \cdot L_{beam}^2}{8} + \frac{LL \cdot L_{beam}}{4} = 17.996 \cdot ft \cdot lbf$ Required moment due to dead load and live load. (ANSI/AISC 360-10, Table 3-23)

8.1.4.3 - SECTION PROPERTIES

$b_f := l_{pipe_support} = 2 \cdot in$ Beam width about the moment axis.

$t_f := t_{pipe_support} = 0.25 \cdot in$ Beam thickness about the moment axis.

$Z_p := \frac{b_f \cdot t_f^2}{4} = 0.031 \cdot in^3$ Plastic section of the plate about the moment axis. (ANSI/AISC 360-10, Table 17-27, Properties of Geometric Sections, pg. 17-37)

$S_x := \frac{b_f \cdot t_f^2}{6} = 0.021 \cdot in^3$ Elastic section modulus about the moment axis. (ANSI/AISC 360-10, Table 17-27,Properties of Geometric Sections, pg. 17-36)

$A_g := b_f \cdot t_f = 0.5 \cdot in^2$ Gross sectional area of pipe support. (H-14-111373, Sht. 1, E7)

8.1.4.4 - CAPACITIES

NOTE: Per Section F11.2.d of ANSI/AISC 360-10, the limit state of lateral-torsional buckling need not be considered for rounds and rectangular bars bent about their minor axis.

$\Omega_b := 1.67$ — ASD safety factor for flexure. (ANSI/AISC 360-10, Section F1)

$\Omega_v := 1.67$ — ASD safety factor for shear (ANSI/AISC 360-10, Section G1)

NOTE: Calculate Flexural Allowable Strength. Use ANSI/AISC 360, Section F11 per TABLE USER NOTE F1.1, *Selection Table for the Application of Chapter F Sections*

$M_x := F_{y_A36} \cdot S_x = 62.5 \cdot ft \cdot lbf$ — Yield moment.

$M_{nx} := \min\left(F_{y_A36} \cdot Z_p, 1.6 \cdot M_x\right) = 93.75 \cdot ft \cdot lbf$ — Nominal flexural strength about moment axis. (ANSI/AISC 360-10, eqn. F11.1)

$\boxed{\Omega M_{nx} := \frac{M_{nx}}{\Omega_b} = 56.138 \cdot ft \cdot lbf}$ — Allowable flexural strength about moment axis. (ANSI/AISC 360-10, Section F1.)

NOTE: Calculate Shear Strength. Use ANSI/AISC 360, Section G7, weak-axis shear in doubly symmetric and singly symmetric shapes.

$h := b_f = 2 \cdot in$ — Clear distance between flanges.

$t_w := t_{pipe_support} = 0.25 \cdot in$ — Web thickness.

$k_v := 1.2$ — Web plate shear buckling coefficient.

$$C_v := \begin{cases} 1.0 & \text{if } \frac{h}{t_w} \le 1.10 \cdot \sqrt{\frac{k_v \cdot E_{A36}}{F_{y_A36}}} \\ \dfrac{1.10 \cdot \sqrt{\frac{k_v \cdot E_{A36}}{F_{y_A36}}}}{\frac{h}{t_w}} & \text{if } \frac{h}{t_w} > 1.10 \cdot \sqrt{\frac{k_v \cdot E_{A36}}{F_{y_A36}}} \wedge \frac{h}{t_w} \le 1.37 \cdot \sqrt{\frac{k_v \cdot E_{A36}}{F_{y_A36}}} \\ \dfrac{1.51 \cdot E_{A36} \cdot k_v}{\left(\frac{h}{t_w}\right)^2 \cdot F_{y_A36}} & \text{otherwise} \end{cases}$$

$C_v = 1$

$V_n := 0.6 \cdot F_{y_A36} \cdot A_g \cdot C_v = 10800\ lbf$ — Nominal shear strength. (ANSI/AISC 360-10, eqn (G2-1))

$\boxed{\Omega V_n := \frac{V_n}{\Omega_v} = 6467\ lbf}$ — Allowable shear strength. (ANSI/AISC 360-10, Section G1.)

8.1.4.5 -STRUCTURAL EVALUATION

8.1.4.5.1 - FLEXURE

$$DCR_{flexure} := \frac{M_r}{\Omega M_{nx}} = 0.321$$

where $M_r = 17.996 \cdot ft \cdot lbf$

$\Omega M_{nx} = 56.138 \cdot ft \cdot lbf$

Design vs. Capacity ratio for flexural strength about the moment axis.

$$FLEXURE_IS := if\left(\frac{M_r}{\Omega M_{nx}} < 1, \text{"ADEQUATE"}, \text{"NOT_ADEQUATE"}\right) = \text{"ADEQUATE"}$$

8.1.4.5.2 - SHEAR

$$DCR_{shear} := \frac{V_r}{\Omega V_n} = 0.016$$

where $V_r = 100.306\ lbf$

$\Omega V_n = 6.467 \times 10^3\ lbf$

Design vs. Capacity ratio for shear strength in the weak direction.

$$SHEAR_IS := if\left(\frac{V_r}{\Omega V_n} < 1, \text{"ADEQUATE"}, \text{"NOT_ADEQUATE"}\right) = \text{"ADEQUATE"}$$

8.2 - PIPE GUIDE

8.2.1 - GEOMETRIC PROPERTIES:

$t_{pipe_guide} := \frac{1}{4}in$

Plate thickness of pipe guide. (H-14-111373, Sht. 1, Detail 2, Zone D8)

$l_{pipe_guide} := 4in$

Plate length of pipe guide. (H-14-111373, Sht.1, Detail 2, Zone D8)

$w_{pipe_guide} := 1in + \frac{1}{4}in = 1.25 \cdot in$

Plate width of pipe guide. (H-14-111373, Sht. 1, Detail 2, Zone D8)

8.2.2 - MATERIAL PROPERTIES:

$F_{y_A240} := 25ksi$

Yield Strength of pipe guide. (ASTM A240, TP304L, H-14-111373, Sht. 1, Zone D8)

$E_{A240} := 29000ksi$

Modulus of elasticity of steel (ANSI/AISC 360-10, Table B4.1b).

8.2.3 - APPLIED LOADS

8.2.3.1 - LATERAL AND VERTICAL

Table 8.2.3-1 - Maximum Guide and V-Stop Reaction Loads

Support Type	Line Size (in)	Lateral Horizontal Force (lbf) P_H	Vertical (downward) Force (lbf) P_V
Guide	3	1038	200

(RPP-CALC-62528, Table 7-2, *Bounding Carrier Support Reaction Loads*, page 28)

$P_{H_guide} := 1600lbf$

$P_{V_guide} := 300lbf$

NOTE: Loads will be rounded up for conservatism.

8.2.3.2 - AXIAL

NOTE: Due to the 6" encasement and the 3" carrier pipe having different thermal coefficients, differential thermal displacement will induce an axial load at the plate and inner surface of the 6" encasement during operation. The worst case magnitude of this load is based on the normal force generated by the lateral and vertical force acting in friction.

$P_{ssrs} := \sqrt{P_{H_guide}^2 + P_{V_guide}^2} = 1.628 \cdot kip$

Normal force on the 6" encasement based on the lateral and vertical loads as the 3" carrier pipe expands.

$\mu_{coeff} := 0.78$

Coefficient of Friction between guide plate and inner surface of 6" encasement, steel-steel, dry. (Lindeberg, Table 73.1)

$P_A := \mu_{coeff} \cdot P_{ssrs} = 1.27 \cdot kip$

Resulting applied force due to friction as the 6" encasement moves axially at a different rate than the 3" carrier pipe.

8.2.4 - SECTION CHECKS

8.2.4.1 - FLEXURAL BENDING IN PLATE AT SECTION B-B

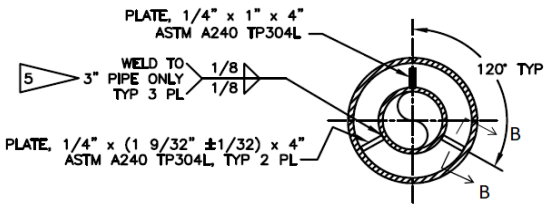

NOTE: The plate is critical in compression and bending at section B-B. Guide is welded only to pipe. Along with axial forces, guide will bend and shear common to the root.

NOTE: The top plate's design function is for alignment during assembly and installation. The plate will not experience load since there is no vertical upward load.

8.2.4.2 - MOMENTS AND SHEARS

$P_{resultant} := \sqrt{P_{V_guide}^2 + P_{H_guide}^2} = 1.628 \cdot kip$ Resultant load.

$\theta = 120^o$

(typ)

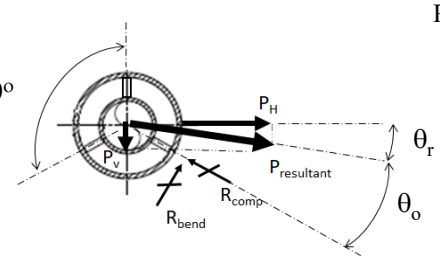

$\theta_r := atan\left(\frac{|P_{V_guide}|}{P_{H_guide}}\right) = 10.62 \cdot deg$ Angle of resultant load relative to horizontal axis.

$\theta_o := 30deg - \theta_r = 19.38 \cdot deg$ Angle between resultant load and line of action.

$P_{comp} := P_{resultant} \cdot cos(\theta_o) = 1.536 \cdot kip$ Axial load. (Compression)

$P_{bending} := P_{resultant} \cdot sin(\theta_o) = 540.192\ lbf$ Transverse Load (Shear and bending due to eccentricity).

$e_r := w_{pipe_guide} = 1.25 \cdot in$ Eccentric distance from the root common to the weld. H-14-111373, Sht. 1, D8)

$M_{r_pipe_guide} := P_{bending} \cdot e_r = 56.27 \cdot ft \cdot lbf$ Required Moment due to eccentricity.

$V_{r_pipe_guide} := P_{bending} = 540.192\ lbf$ Required shear in the minor axis.

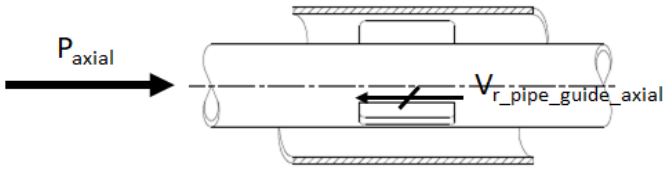

NOTE: Worst case is one guide resisting all of the load.

$V_{r_pipe_guide_axial} := P_A = 1.27 \cdot kip$ Required shear in the axial direction

$V_{u_pipe_guide} := \sqrt{V_{r_pipe_guide}^2 + V_{r_pipe_guide_axial}^2} = 1.38 \cdot kip$ Maximum required shear.

8.2.4.3 - SECTION PROPERTIES

$b_{f_pipe_guide} := l_{pipe_guide} = 4 \cdot in$

Plate width of cross section. (H-14-111373, Sht. 1, Zone D8)

$t_{f_pipe_guide} := t_{pipe_guide} = 0.25 \cdot in$

Plate width of cross section. (H-14-111373, Sht. 1, Zone D8)

$$Z_{y_pipe_guide} := \frac{b_{f_pipe_guide} \cdot t_{f_pipe_guide}^2}{4} = 0.063 \cdot in^3$$

Plastic section of the plate about the moment axis. (ANSI/AISC 360-10, Table 17-27, Properties of Geometric Sections, pg. 17-37)

$$Z_{x_pipe_guide} := \frac{t_{f_pipe_guide} \cdot b_{f_pipe_guide}^2}{4} = 1 \cdot in^3$$

Plastic section of the plate about the moment axis. (ANSI/AISC 360-10, Table 17-27, Properties of Geometric Sections, pg. 17-37)

$$S_{y_pipe_guide} := \frac{b_{f_pipe_guide} \cdot t_{f_pipe_guide}^2}{6} = 0.042 \cdot in^3$$

Elastic section modulus about the moment axis. (ANSI/AISC 360-10, Table 17-27,Properties of Geometric Sections, pg. 17-37)

$$S_{x_pipe_guide} := \frac{t_{f_pipe_guide} \cdot b_{f_pipe_guide}^2}{6} = 0.667 \cdot in^3$$

Elastic section modulus about the moment axis. (ANSI/AISC 360-10, Table 17-27,Properties of Geometric Sections, pg. 17-37)

$A_{g_pipe_guide} := b_{f_pipe_guide} \cdot t_{f_pipe_guide} = 1 \cdot in^2$

Gross cross-section area of member.

8.2.4.4 - CAPACITIES

NOTE: Per Section F11.2. (d) of ANSI/AISC 360-10, the limit state of lateral-torsional buckling need not be considered for rounds and rectangular bars bent about their minor axis.

$\Omega_b = 1.67$

Recall ASD safety factor for flexure. (ANSI/AISC 360-10, Section F1)

$\Omega_c := 1.67$

ASD safety factor for compression. (ANSI/AISC 360-10, Section E1)

$\Omega_v = 1.67$

Recall ASD safety factor for shear. (ANSI/AISC 360-10, Section G1)

8.2.4.4.1 - CALCULATE FLEXURAL ALLOWABLE STRENGTH

NOTE: Use ANSI/AISC 360, Section F11 per TABLE USER NOTE F1.1, *Selection Table for the Application of Chapter F Sections*

$M_{y_pipe_guide} := F_{y_A240} \cdot S_{y_pipe_guide} = 86.806 \cdot ft \cdot lbf$ Yield moment about the minor axis.

$M_{ny_guide} := \min\left(F_{y_A240} \cdot Z_{y_pipe_guide}, 1.6 \cdot M_{y_pipe_guide}\right) = 130.208 \cdot ft \cdot lbf$ Nominal flexural strength about minor axis. (ANSI/AISC 360-10, eqn. F11.1)

$\boxed{\Omega M_{ny_guide} := \frac{M_{ny_guide}}{\Omega_b} = 77.969 \cdot ft \cdot lbf}$ Allowable flexural strength about minor axis. (ANSI/AISC 360-10, Section F1.)

$M_{x_guide} := F_{y_A240} \cdot S_{x_pipe_guide} = 1.389 \times 10^3 \cdot ft \cdot lbf$ Yield moment about the major axis.

$M_{nx_guide} := \min\left(F_{y_A240} \cdot Z_{x_pipe_guide}, 1.6 \cdot M_{x_guide}\right) = 2.083 \times 10^3 \cdot ft \cdot lbf$ Nominal flexural strength about major axis. (ANSI/AISC 360-10, eqn. F11.1)

$\boxed{\Omega M_{nx_guide} := \frac{M_{nx_guide}}{\Omega_b} = 1248 \cdot ft \cdot lbf}$ Allowable flexural strength about major axis. (ANSI/AISC 360-10, Section F1.)

8.2.4.4.2 - CALCULATE COMPRESSION ALLOWABLE STRENGTH

NOTE: Use ANSI/AISC 360-10, Section E3 and TABLE USER NOTE E1.1, *Selection Table for the Application of Chapter E Sections*

$k := 2.0$ — Effective length factor. (ANSI/AISC 360-10, Section E2.)

$L_o := w_{pipe_guide} = 1.25 \cdot in$ — Laterally unbraced length of the member. (ANSI/AISC 360-10, Section E2.)

$L_c := k \cdot L_o = 2.5 \cdot in$ — Effective length of member.

$r_o := \frac{t_{f_pipe_guide}}{\sqrt{12}} = 0.072 \cdot in$ — Radius of gyration. (ANSI/AISC 360-10, page 17-37)

$F_e := \frac{\pi^2 \cdot E_{A240}}{\left(\frac{L_c}{r_o}\right)^2} = 238.515 \cdot ksi$ — Elastic buckling stress. (ANSI/AISC 360-10, (eqn. E3-4))

$\frac{k \cdot L_c}{r_o} = 69.282$ — Slenderness ratio. (ANSI/AISC 360-10, Section E2)

$4.71 \cdot \sqrt{\frac{E_{A240}}{F_{y_A240}}} = 160.417$ — Slenderness ratio cutoff. (ANSI/AISC 360-10, Section E3)

$\frac{F_{y_A240}}{F_e} = 0.105$ — Slenderness ratio cutoff. (ANSI/AISC 360-10, Section E3)

$$F_{cr} := \begin{cases} \left(0.658^{\frac{F_{y_A240}}{F_e}} \cdot F_{y_A240}\right) & \text{if } \frac{F_{y_A240}}{F_e} \le 2.25 \\ \left(0.877 \cdot F_e\right) & \text{otherwise} \end{cases} = 23.927 \cdot ksi$$

Critical stress, F_{cr}. (ANSI/AISC 360-10, (eqn. E3-2 & E3-3))

$P_{n_pipe_guide} := F_{cr} \cdot A_{g_pipe_guide} = 23.927 \cdot kip$ — Nominal compressive strength. (ANSI/AISC 360-10, eqn. (E3-1))

where $A_{g_pipe_guide} = 1 \cdot in^2$

$$\boxed{\Omega P_{n_pipe_guide} := \frac{P_{n_pipe_guide}}{\Omega_c} = 14.328 \cdot kip}$$

Allowable compression strength. (ANSI/AISC 360-10, Section E1.)

8.2.4.4.3 - CALCULATE SHEAR ALLOWABLE STRENGTH

NOTE: Use ANSI/AISC 360-10, Section G7, weak-axis shear in doubly symmetric and singly symmetric shapes.

$h := b_{f_pipe_guide} = 4 \cdot in$ Clear distance between flanges.

$t_w := t_{pipe_guide} = 0.25 \cdot in$ Web thickness.

$k_v := 1.2$ Web plate shear buckling coefficient.

$$C_v := \begin{cases} 1.0 & \text{if } \frac{h}{t_w} \le 1.10 \cdot \sqrt{\frac{k_v \cdot E_{A240}}{F_{y_A240}}} \\ \frac{1.10 \cdot \sqrt{\frac{k_v \cdot E_{A240}}{F_{y_A240}}}}{\frac{h}{t_w}} & \text{if } \frac{h}{t_w} > 1.10 \cdot \sqrt{\frac{k_v \cdot E_{A240}}{F_{y_A240}}} \wedge \frac{h}{t_w} \le 1.37 \cdot \sqrt{\frac{k_v \cdot E_{A240}}{F_{y_A240}}} \\ \frac{1.51 \cdot E_{A240} \cdot k_v}{\left(\frac{h}{t_w}\right)^2 \cdot F_{y_A240}} & \text{otherwise} \end{cases}$$

$C_v = 1$

$V_{n_pipe_guide} := 0.6 \cdot F_{y_A240} \cdot A_{g_pipe_guide} \cdot C_v = 15 \cdot kip$ Nominal shear strength in lateral direction . (ANSI/AISC 360-10, eqn. (G2-1))

where $A_{g_pipe_guide} = 1 \cdot in^2$

$$\boxed{\Omega V_{n_pipe_guide} := \frac{V_{n_pipe_guide}}{\Omega_v} = 8.982 \cdot kip}$$

Allowable shear strength. (ANSI/AISC 360-10, Section G1.)

8.2.4.5 -STRUCTURAL EVALUATION

8.2.4.5.1 - FLEXURE

$$DCR_{guide_flexure} := \frac{M_{r_pipe_guide}}{\Omega M_{ny_guide}} = 0.722$$

Demand-Capacity ratio is less than 1; therefore, adequate.

where $M_{r_pipe_guide} = 56.27 \cdot ft \cdot lbf$

$\Omega M_{ny_guide} = 77.969 \cdot ft \cdot lbf$

$$PIPE_GUIDE_FLEXURE_IS := if\left(DCR_{guide_flexure} < 1, "ADEQUATE", "NOT_ADEQUATE"\right) = "ADEQUATE"$$

8.2.4.5.2 - SHEAR

$$DCR_{guide_shear} := \frac{V_{u_pipe_guide}}{\Omega V_{n_pipe_guide}} = 0.154$$

Demand-Capacity ratio is less than 1; therefore, adequate.

where

$V_{u_pipe_guide} = 1.38 \cdot kip$

$\Omega V_{n_pipe_guide} = 8.982 \cdot kip$

$$PIPE_GUIDE_SHEAR_IS := if\left(\frac{V_{u_pipe_guide}}{\Omega V_n} < 1, "ADEQUATE", "NOT_ADEQUATE"\right) = "ADEQUATE"$$

8.2.4.5.2 - COMBINED AXIAL COMPRESSION AND FLEXURE

NOTE: Use doubly and singly symmetric members subject to flexure and axial force, ANSI/AISC 360-15, Section H1.1.

$P_r := P_{comp} = 1.536 \cdot kip$ — Required axial strength. (ANSI/AISC 360-10, Section H1.1.)

$P_c := \Omega P_{n_pipe_guide} = 14.328 \cdot kip$ — Available axial strength. (ANSI/AISC 360-10, Section H1.1.)

$\frac{P_r}{P_c} = 0.107$ — Axial Compression ratio.

$M_{rx} := 0 ft \cdot lbf$ — Required moment about the major axis.

$M_{ry} := M_{r_pipe_guide} = 56.27 \cdot ft \cdot lbf$ — Required moment about the minor axis.

$M_{cx} := \Omega M_{nx_guide} = 1.248 \times 10^3 \cdot ft \cdot lbf$ — Available flexural strength about the minor axis.

$M_{cy} := \Omega M_{ny_guide} = 77.969 \cdot ft \cdot lbf$ — Available flexural Strength about the major axis.

$$DCR_{guide_compression} := \frac{P_r}{2 \cdot P_c} + \left(\frac{M_{rx}}{M_{cy}} + \frac{M_{ry}}{M_{cy}}\right) = 0.775$$

Demand-Capacity ratio is less than 1; therefore, adequate.

ANSI/AISC 360-10, eqn (H1-1b)

$$COMBINED_IS := if\left(DCR_{guide_compression} \le 1.0, "ADEQUATE", "NOT_ADEQUATE"\right) = "ADEQUATE"$$

8.3 - ANCHOR PLATE

8.3.1 - GEOMETRIC PROPERTIES:

$t_{plate} := 1in + \frac{1}{4}in = 1.25 \cdot in$ — Anchor plate thickness. (H-14-111373, Sht. 1,E4, Detail 4)

$r_{outer_vent} := 3in + \frac{1}{32}in = 3.031 \cdot in$ — Outer Radius of vent slot centerline. (H-14-111373, Sht. 1, E4, Detail 4)

$r_{outer_drain} := r_{outer_vent} = 3.031 \cdot in$ — Outer Radius of drain slot centerline. (H-14-111373, Sht. 1, E4, Detail 4)

$r_{inner_vent} := 2in + \frac{17}{32}in = 2.531 \cdot in$ — Inner radius of vent slot centerline. (H-14-111373, Sht. 1, E4, Detail 4)

$r_{inner_drain} := 2in + \frac{1}{32}in = 2.031 \cdot in$ — Inner radius of drain slot centerline. (H-14-111373, Sht. 1, E4, Detail 4)

$dia_{pipe_hole} := 3in + \frac{5}{8}in = 3.625 \cdot in$ — Diameter of anchor plate pipe hole. (H-14-111373, Sht. 1, E4, Detail 4)

$dia_{plate} := 1ft + 11in = 1.917\ ft$ — Diameter of anchor plate. (H-14-111373, Sht. 1, F4, Detail 4)

$t_{insulation} := 2in$ — Thickness of insulation. (H-14-111373, Sht. 2, C7)

$dia_{encasement} := 6.625in$ — Diameter of encasement pipe. (H-14-111373, Sht. 1, Detail 3, D7)

$dia_{carrier} := 3in + \frac{5}{8}in = 3.625 \cdot in$ — Diameter of carrier pipe. (H-14-111373, Sht. 1, Detail 3, D7)

8.3.2 - MATERIAL PROPERTIES:

$F_{y_A240} = 25 \cdot ksi$ — Yield Strength of Anchor Plate. (H-14-111373, Sht. 1, Detail 4: ASTM A240 304L)

$E_{A240} = 2.9 \times 10^{7}\ psi$ — Elastic Modulus of ASTM A240 304L.

8.3.3 - APPLIED LOADS

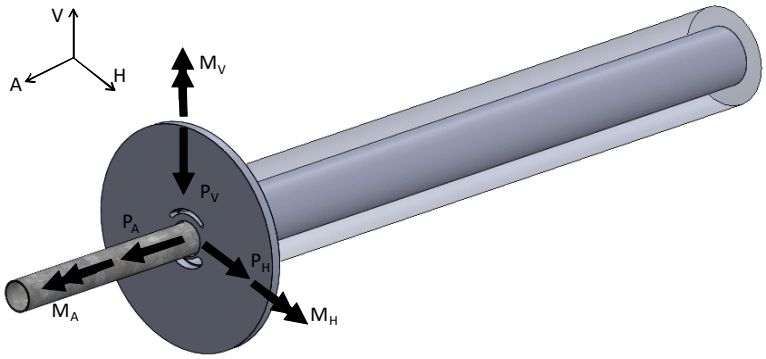

Drawing H -14-111373, "Piping Details, AP Farm Yard Piping")

(RPP-CALC-62528, Table 7-1, *Bounding Anchor Reaction Loads,* page 28)

Table 8.3.3-1 - Maximum Anchor Reaction Loads (On one side of Anchor)

Pit Anchor or Field/ Interface Anchor	Nominal Line Size (in)	Normal (Axial) Horizontal Force (lbf) (+ = away from "wall") P_A		Maximum Lateral Horizontal Force (lbf) P_H	Maximum Lateral Vertical Force (lbf) P_V	Maximum Torsional Moment about Normal Axis (ft-lbf) M_A	Maximum Moment about Lateral Horizontal Axis (ft-lbf) M_H	Maximum Moment about Lateral Vertical Axis (ft-lbf) M_V
		Minimum	Maximum					
Field	3	-595	663	566	-160	99	204	994
Field	6	-16202	11336	860	-161	565	801	1545

8.3.3.1 - APPLIED FORCES

$P_{A_min_3in} := |-595| \cdot lbf = 0.595 \cdot kip$

$P_{A_max_3in} := |663| \cdot lbf = 0.663 \cdot kip$

$P_{H_3in} := |566| \cdot lbf = 0.566 \cdot kip$

$P_{V_3in} := |-160|\ lbf = 0.16 \cdot kip$

$P_{A_min_6in} := |-16202| \cdot lbf = 16.202 \cdot kip$

$P_{A_max_6in} := |11336| \cdot lbf = 11.336 \cdot kip$

$P_{H_6in} := |860| \cdot lbf = 0.86 \cdot kip$

$P_{V_6in} := |-161|\ lbf = 0.161 \cdot kip$

8.3.3.2 - APPLIED MOMENTS

$M_{A_3in} := |99| \cdot ft \cdot lbf = 99 \cdot ft \cdot lbf$

$M_{H_3in} := |204| \cdot ft \cdot lbf = 204 \cdot ft \cdot lbf$

$M_{V_3in} := |994|\ ft \cdot lbf = 0.994 \cdot ft \cdot kip$

$M_{A_6in} := |565| \cdot ft \cdot lbf = 565 \cdot ft \cdot lbf$

$M_{H_6in} := |801| \cdot ft \cdot lbf = 801 \cdot ft \cdot lbf$

$M_{V_6in} := |1545|\ ft \cdot lbf = 1.545 \cdot ft \cdot kip$

8.3.4 - SECTION CHECKS

8.3.4.1 - EVALUATE ANCHOR PLATE AT SECTION C-C IN AXIAL, FLEXURE AND SHEAR

NOTE: Section C-C has minimum material. Use load from 3 inch pipe.

8.3.4.1.1 - FREEBODY DIAGRAM AND INTERNAL LOADS

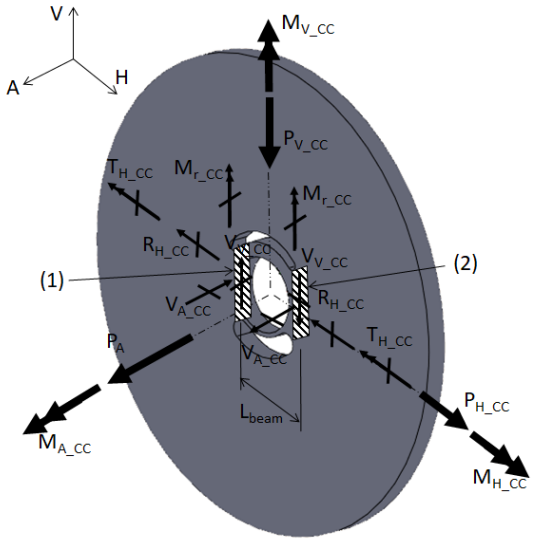

$P_{A_CC} := \max\left[\left(P_{A_min_3in}\right), \left(P_{A_max_3in}\right)\right] = 0.663 \cdot kip$

$P_{H_CC} := P_{H_3in} = 0.566 \cdot kip$

$P_{V_CC} := P_{V_3in} = 160\ lbf$

$M_{V_CC} := M_{V_3in} = 994 \cdot ft \cdot lbf$

$M_{H_CC} := M_{H_3in} = 204 \cdot ft \cdot lbf$

$M_{A_CC} := M_{A_3in} = 99 \cdot ft \cdot lbf$

8.3.4.1.2 - MOMENTS AND SHEAR REACTIONS

8.3.4.1.2.1 - REQUIRED MOMENT ABOUT THE VERTICAL AXIS:

NOTE: Simulated as AISC/ANSI 360 Table 3-23, Load Case 7, Simple Beam - Concentrated Load at Center.

$P_{r_CC} := \max(P_{A_min_3in}, P_{A_max_3in}) = 663\ lbf$ Max concentrated beam load from 3in pipe.

$L_{span} := 4in$ Horizontal span distance between vent slots. (H-14-111373, Sht. 1, F5)

$M_{r_CC} := \frac{P_{r_CC} \cdot L_{span}}{4} = 55.25 \cdot ft \cdot lbf$ Required eccentric moment due to 3 inch pipe. (ANSI/AISC 360-10)

8.3.4.1.2.2 - REQUIRED SHEAR:

NOTE: To derive shears reactions,
- Applied moment about normal axis, M_A,is taken out as a force-couple in the vertical direction in shear by C-C
- Applied moment about vertical axis, M_V, is taken out as a force and couple in the axial direction in shear by C-C
- Applied moment about horizontal axis, M_V, is taken out as torsion.

$d_{couple} := 4in$ Couple Distance between C-C.

$no_{faces} := 2$ Number of faces that react shear loads.

8.3.4.1.2.3 - MAX REQUIRED SHEAR IN AXIAL DIRECTION:

$V_{A_CC1_max} := \left| \frac{M_{V_CC}}{d_{couple}} + \frac{(P_{A_max_3in} + P_{A_max_6in})}{no_{faces}} \right| = 8.981 \cdot kip$ Shear due to M_V and P_{A_max} in face (1).

$V_{A_CC2_max} := \left| \frac{-M_{V_CC}}{d_{couple}} + \frac{(P_{A_max_3in} + P_{A_max_6in})}{no_{faces}} \right| = 3.018 \cdot kip$ Shear due to M_V and P_{A_max} in face (2).

$V_{A_CC1_min} := \left| \frac{M_{V_CC}}{d_{couple}} + \frac{-(P_{A_min_3in} + P_{A_min_6in})}{no_{faces}} \right| = 5.416 \cdot kip$ Shear due to M_V and P_{A_min} in face (1).

$V_{A_CC2_min} := \left| \frac{-M_{V_CC}}{d_{couple}} + \frac{-(P_{A_min_3in} + P_{A_min_6in})}{no_{faces}} \right| = 11.38 \cdot kip$ Shear due to M_V and P_{A_min} in face (2).

$V_{rA_CC} := \max(V_{A_CC1_max}, V_{A_CC1_min}, V_{A_CC2_max}, V_{A_CC2_min}) = 11.38 \cdot kip$ Required max shear in axial direction.

8.3.4.1.2.4 - REQUIRED SHEAR IN VERTICAL DIRECTION

$$V_{V_CC1} := \left| \frac{-M_{A_CC}}{d_{couple}} + \frac{-P_{V_CC}}{no_{faces}} \right| = 0.377 \cdot kip$$

Shear due to M_A and P_V in face (1).

$$V_{V_CC2} := \left| \frac{M_{A_CC}}{d_{couple}} + \frac{-P_{V_CC}}{no_{faces}} \right| = 0.217 \cdot kip$$

Shear due to M_A and P_V in face (2).

$$V_{rV_CC} := \max(V_{V_CC1}, V_{V_CC2}) = 0.377 \cdot kip$$

Required max shear in vertical direction.

8.3.4.1.2.5 - REQUIRED TORSION ABOUT THE HORIZONTAL AXIS

$$T_{H_CC1} := \left| \frac{M_{H_CC}}{no_{faces}} \right| = 102 \cdot ft \cdot lbf$$

Torsion about the horizontal direction in section C-C, face (1).

$$T_{H_CC2} := \left| \frac{M_{H_CC}}{no_{faces}} \right| = 102 \cdot ft \cdot lbf$$

Torsion about the horizontal direction in section C-C, face (2).

$$T_{rH_CC} := \max(T_{H_CC1}, T_{H_CC2}) = 102 \cdot ft \cdot lbf$$

Required max torsion

8.3.4.1.2.6 - REQUIRED AXIAL FORCE IN THE HORIZONTAL DIRECTION

$$R_{H_CC1} := \left| \frac{P_{H_guide}}{no_{faces}} \right| = 800\ lbf$$

Tension on face (1).

$$R_{H_CC2} := \left| \frac{P_{H_guide}}{no_{faces}} \right| = 800\ lbf$$

Compression bearing on face (2).

8.3.4.1.3 - SECTION PROPERTIES

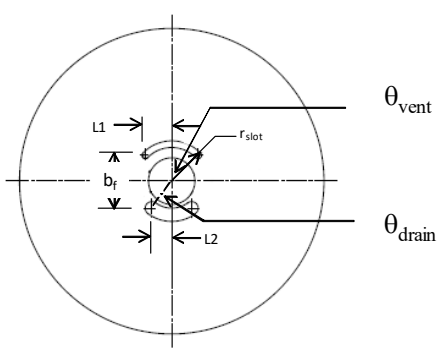

Geometry of anchor plate common to slots. (H-14-111373, Sht. 1, E4, Detail 4)

$$r_{outer_vent} = 3.031 \cdot in$$

Recall slot radius.

$$L1 := 2in + \frac{(r_{outer_vent} - r_{inner_vent})}{2} = 2.25 \cdot in$$

Distance of vent slot corner to vertical axis. (H-14-111373, Sht. 1, Detail 4, E5)

$$L2 := \left(1in + \frac{1}{2}in\right) + \left(\frac{r_{outer_drain} - r_{inner_drain}}{2}\right) = 2 \cdot in$$

Distance of drain slot corner to vertical axis. (H-14-111373, Sht. 1, Detail 4, E5)

$\theta_{vent} := \operatorname{asin}\left(\frac{L1}{r_{inner_vent}}\right) = 62.734 \cdot deg$ — Angle between vertical axis and vent corner centerline.

$\theta_{drain} := \operatorname{asin}\left(\frac{L2}{r_{inner_drain}}\right) = 79.937 \cdot deg$ — Angle between horizontal axis and drain corner centerline.

$b_{f_CC} := r_{outer_vent} \cdot \cos(\theta_{vent}) + r_{outer_drain} \cdot \cos(\theta_{drain}) = 1.918 \cdot in$ — Plate width of cross section. (H-14-111373, Sht. 1, D4)

$t_{f_CC} := t_{plate} = 1.25 \cdot in$ — Plate thickness of cross section. (H-14-111373, Sht. 1, D4)

$Z_{px_CC} := \frac{b_{f_CC} \cdot t_{f_CC}^2}{4} = 0.749 \cdot in^3$ — Plastic section modulus about the minor axis. (ANSI/AISC 360-10, page 17-37)

$Z_{py_CC} := \frac{t_{f_CC} \cdot b_{f_CC}^2}{4} = 1.15 \cdot in^3$ — Plastic section modulus about the major axis. (ANSI/AISC 360-10, page 17-37)

$S_{x_CC} := \frac{b_{f_CC} \cdot t_{f_CC}^2}{6} = 0.5 \cdot in^3$ — Section modulus about the minor axis. (ANSI/AISC 360-10, page 17-37)

$S_{y_CC} := \frac{t_{f_CC} \cdot b_{f_CC}^2}{6} = 0.767 \cdot in^3$ — Section modulus about the major axis. (ANSI/AISC 360-10, page 17-37)

$A_{g_CC} := b_{f_CC} \cdot t_{f_CC} = 2.398 \cdot in^2$ — Gross cross-section area of member.

8.3.4.1.4 - CAPACITIES

8.3.4.1.4.1 - SAFETY FACTORS

NOTE: Per Section F11.2.(d) of ANSI/AISC 360, the limit state of lateral-torsional buckling need not be considered for rounds and rectangular bars bent about their minor axis.

$\Omega_b = 1.67$ — Recall ASD safety factor for flexure. (ANSI/AISC 360-10, Section F1)

$\Omega_v = 1.67$ — Recall ASD safety factor for shear. (ANSI/AISC 360-10, Section G1)

$\Omega_T := 1.67$ — ASD safety factor for torsional strength of round and rectangular HSS. (ANSI/AISC 360-10, Section H3.1.)

8.3.4.1.4.2 - CALCULATE FLEXURAL ALLOWABLE STRENGTH

NOTE: Use ANSI/AISC 360, Section F11 per TABLE USER NOTE F1.1, *Selection Table for the Application of Chapter F Sections*

$M_{x_CC} := F_{y_A240} \cdot S_{x_CC} = 1.041 \cdot ft \cdot kip$ — Yield moment about the moment axis.

$M_{nx_CC} := \min\left(F_{y_A240} \cdot Z_{px_CC}, 1.6 \cdot M_{x_CC}\right) = 1.561 \cdot ft \cdot kip$ — Nominal flexural strength about moment axis. (ANSI/AISC 360-10, (eqn. F11.1))

$\boxed{\Omega M_{n_CC} := \frac{M_{nx_CC}}{\Omega_b} = 0.935 \cdot ft \cdot kip}$ — Allowable flexural Strength in weak axis. (ANSI/AISC 360-10, Section F1.)

8.3.4.1.4.3 - CALCULATE AXIAL SHEAR ALLOWABLE STRENGTH

NOTE: Use ANSI/AISC 360-10, Section G7, weak-axis shear in doubly symmetric and singly symmetric shapes.

$h := b_{f_CC} = 1.918 \cdot in$ — Clear distance between flanges.

$t_w := t_{plate} = 1.25 \cdot in$ — Web thickness.

$k_v := 1.2$ — Web plate shear buckling coefficient.

$$C_{v2} := \begin{cases} 1.0 & \text{if } \frac{h}{t_w} \le 1.10 \cdot \sqrt{\frac{k_v \cdot E_{A240}}{F_{y_A240}}} \\ \dfrac{1.10 \cdot \sqrt{\frac{k_v \cdot E_{A240}}{F_{y_A240}}}}{\frac{h}{t_w}} & \text{if } \frac{h}{t_w} > 1.10 \cdot \sqrt{\frac{k_v \cdot E_{A240}}{F_{y_A240}}} \wedge \frac{h}{t_w} \le 1.37 \cdot \sqrt{\frac{k_v \cdot E_{A240}}{F_{y_A240}}} \\ \dfrac{1.51 \cdot E_{A240} \cdot k_v}{\left(\frac{h}{t_w}\right)^2 \cdot F_{y_A240}} & \text{otherwise} \end{cases}$$

$C_{v2} = 1$

$V_{n_CC} := 0.6 \cdot F_{y_A240} \cdot b_{f_CC} \cdot t_{f_CC} \cdot C_{v2} = 35.969 \cdot kip$ — Nominal shear strength in weak axis. (ANSI/AISC 360-10, (eqn. G2-1))

$\boxed{\Omega V_{n_CC} := \frac{V_{n_CC}}{\Omega_v} = 21.538 \cdot kip}$ — Allowable shear strength in weak axis. (ANSI/AISC 360, Section G1.)

8.3.4.1.4.4 - CALCULATE COMPRESSION ALLOWABLE STRENGTH

NOTE: Use ANSI/AISC 360, Section E3 per TABLE USER NOTE E1.1, *Selection Table for the Application of Chapter E Sections*

$k_{CC} := 2.0$ — Effective length factor. (ANSI/AISC 360-10, Section E2.)

$L_{o_CC} := L_{span} = 4 \cdot in$ — Laterally unbraced length of the member. (ANSI/AISC 360-10, Section E2.)

$L_{c_CC} := k_{CC} \cdot L_{o_CC} = 8 \cdot in$ — Effective length of member.

$r_{o_CC} := \frac{t_{f_CC}}{\sqrt{12}} = 0.361 \cdot in$ — Radius of gyration. (ANSI/AISC 360-10, page 17-37)

$F_{e_CC} := \frac{\pi^2 \cdot E_{A240}}{\left(\frac{L_{c_CC}}{r_{o_CC}}\right)^2} = 582.313 \cdot ksi$ — Elastic buckling stress. (ANSI/AISC 360-10, (eqn. E3-4))

$\frac{k_{CC} \cdot L_{c_CC}}{r_{o_CC}} = 44.341$ — Slenderness ratio. (ANSI/AISC 360-10, Section E2)

$4.71 \cdot \sqrt{\frac{E_{A240}}{F_{y_A240}}} = 160.417$ — Slenderness ratio cutoff. (ANSI/AISC 360-10, Section E3)

$\frac{F_{y_A240}}{F_e} = 0.105$ — Slenderness ratio cutoff. (ANSI/AISC 360-10, Section E3)

$$F_{cr_CC} := \begin{cases} \left(0.658^{\frac{F_{y_A240}}{F_e}} \cdot F_{y_A240}\right) & \text{if } \frac{F_{y_A240}}{F_e} \le 2.25 \\ \left(0.877 \cdot F_e\right) & \text{otherwise} \end{cases} = 23.927 \cdot ksi$$

Critical stress, F_{cr}. (ANSI/AISC 360-10, (eq E3-2 & E3-3))

$P_{c_CC} := F_{cr_CC} \cdot A_{g_CC} = 57.375 \cdot kip$ — Nominal compressive strength. (ANSI/AISC 360-10, eqn. (E3-1))

where $A_{g_CC} = 2.398 \cdot in^2$

$$\boxed{\Omega P_{n_CC} := \frac{P_{c_CC}}{\Omega_c} = 34.357 \cdot kip}$$

Allowable compression strength. (ANSI/AISC 360-10, Section E1.)

8.3.4.1.4.5 - CALCULATE TORSIONAL ALLOWABLE STRENGTH

$h_{CC} := b_{f_CC} = 1.918 \cdot in$ Height of section in torsion

$t_{f_CC} = 1.25 \cdot in$ Thickness of section in torsion

$$F_{cr_T} := \begin{cases} 0.6 \cdot F_{y_A240} & \text{if } \dfrac{h_{CC}}{t_{f_CC}} \le 2.45 \cdot \sqrt{\dfrac{E_{A240}}{F_{y_A240}}} \\ 0.6 \cdot F_{y_A240} \left(\dfrac{2.45 \cdot \sqrt{\dfrac{E_{A240}}{F_{y_A240}}}}{\dfrac{h}{t_w}} \right) & \text{if } \dfrac{h_{CC}}{t_{f_CC}} > 2.45 \cdot \sqrt{\dfrac{E_{A240}}{F_{y_A240}}} \wedge \dfrac{h_{CC}}{t_{f_CC}} \le 3.07 \cdot \sqrt{\dfrac{E_{A240}}{F_{y_A240}}} \\ \dfrac{0.458 \cdot \pi^2 \cdot E_{A240}}{\left(\dfrac{h_{CC}}{t_{f_CC}} \right)^2} & \text{otherwise} \end{cases}$$

$F_{cr_T} = 15 \cdot ksi$ Torsional strength of rectangular HSS. [ANSI/AISC 360-10, eqn. (H3-3), (H3-4) and (H3-5)]

$$\boxed{\Omega F_T := \frac{F_{cr_T}}{\Omega_T} = 8.982 \cdot ksi}$$

Allowable Torsional Strength. (ANSI/AISC 360-10, H3.1.)

8.3.4.1.5 -STRUCTURAL EVALUATION

$P_{r_CC} = 663\ \text{lbf}$ Required axial load.

$M_{r_CC} = 55.25 \cdot \text{ft} \cdot \text{lbf}$ Required moment.

$V_{r_CC} := \sqrt{V_{rA_CC}^2 + V_{rV_CC}^2} = 11.387 \cdot \text{kip}$ Required resultant axial shear.

$b := \frac{b_{f_CC}}{2} = 0.959 \cdot \text{in}$ Height of section in torsion.

$a := \frac{t_{plate}}{2} = 0.625 \cdot \text{in}$ Width of section in torsion.

$\tau_{max} := \frac{3 \cdot T_{rH_CC}}{8 \cdot a \cdot b^2} \cdot \left[1 + 0.6095 \cdot \left(\frac{b}{a}\right) + 0.8865 \left(\frac{b}{a}\right)^2 - 1.8023 \cdot \left(\frac{b}{a}\right)^3 + 0.9100 \cdot \left(\frac{b}{a}\right)^4\right] = 2.041 \cdot \text{ksi}$ Required shear stress due to torsion. (Roark, Table 10.1, Case 4. Solid rectangular section)

$\Omega P_{n_CC} = 34.357 \cdot \text{kip}$ Allowable compression strength.

$\Omega M_{n_CC} = 0.935 \cdot \text{ft} \cdot \text{kip}$ Allowable flexural strength.

$\Omega V_{n_CC} = 21.538 \cdot \text{kip}$ Allowable axial shear strength.

$\Omega F_T = 8.982 \cdot \text{ksi}$ Allowable torsional shear stress.

$DCR_{CC} := \left(\frac{P_{r_CC}}{\Omega P_{n_CC}} + \frac{M_{r_CC}}{\Omega M_{n_CC}}\right) + \left(\frac{V_{r_CC}}{\Omega V_{n_CC}} + \frac{\tau_{max}}{\Omega F_T}\right)^2 = 0.65$ Demand-Capacity ratio is less than 1; therefore, adequate. (ANSI/AISC 360-10 Equation (H3-6))

NOTE: The DCR ratios are dimensionless; hence, can use stress and load ratios.

$SECTION_CC_COMBINED_IS := \text{if}\left(DCR_{CC} \le 1.0, \text{"ADEQUATE"}, \text{"NOT_ADEQUATE"}\right) = \text{"ADEQUATE"}$

8.3.4.2 - EVALUATE ANCHOR PLATE AT SECTION D-D

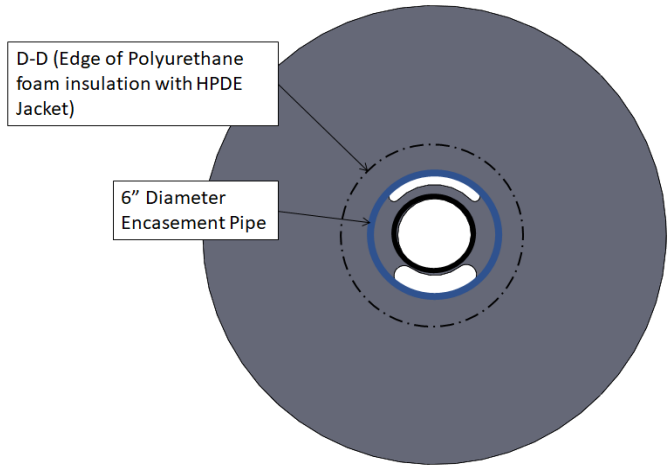

NOTE: Section D-D has a change in stiffness with load from 3 inch carrier pipe and 6 inch pipe encasement. The anchor plate is enclosed by concrete from the HPDE Jacket to the outer edge of the anchor plate.

8.3.4.2.1 - FREEBODY DIAGRAM AND INTERNAL LOADS

NOTE: Use superposition of Roark's Table 11-2 - Formulas for flat circular plates and constant thickness, Case no. 1f, outer edge fixed, inner edge guided. (Young, pg. 461) and Case no. 5f., outer edge fixed, inner edge guided (Young, pg. 478) to get required stresses.

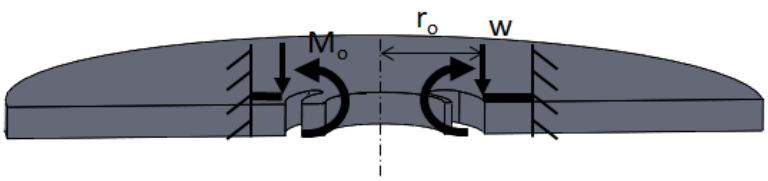

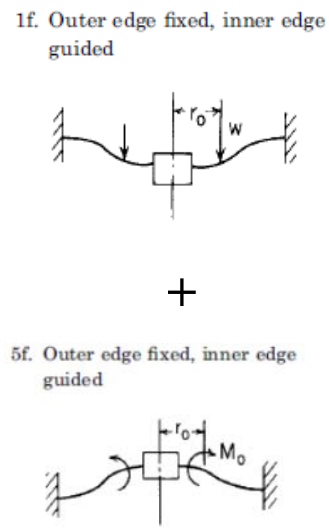

$P_{A_DD} := \max\left[\left(P_{A_min_6in}\right), \left(P_{A_max_6in}\right)\right] = 16.202 \cdot kip$

$P_{H_DD} := P_{H_3in} + P_{H_6in} = 1.426 \cdot kip$

$P_{V_DD} := P_{V_3in} + P_{V_6in} = 321\ lbf$

$M_{V_DD} := M_{V_3in} + M_{V_6in} = 2539 \cdot ft \cdot lbf$

$M_{H_DD} := M_{V_3in} + M_{H_6in} = 1795 \cdot ft \cdot lbf$

$M_{A_DD} := M_{V_3in} + M_{A_6in} = 1559 \cdot ft \cdot lbf$

Loads on the plate due to 6 inch encasement pipe. (RPP-CALC-62528, Table 7-1, page 28)

8.3.4.2.2 - GEOMETRY

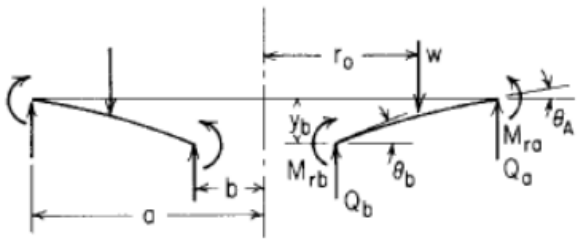

$t_{insulation} = 2 \cdot in$ — Recall thickness of the insulation. (H-14-111373, Sht. 1,C8, Detail 3)

$a_{DD} := \frac{dia_{encasement}}{2} + t_{insulation} = 5.313 \cdot in$ — Distance from edge of plate to center of plate.

$b_{DD} := \frac{dia_{encasement}}{2} = 3.312 \cdot in$ — Distance from center of plate 6 inch pipe outer diameter.

$t := t_{plate} = 1.25 \cdot in$ — Thickness of the plate. (Previously defined)

$r_{o_DD} := b_{DD} = 3.312 \cdot in$ — Distance from center of plate to load application, 6 inch pipe diameter.

8.3.4.2.3 - MATERIAL PROPERTIES

$\nu := 0.3$ — Poisson's ratio. (Young, pg 457)

8.3.4.2.4 - MOMENTS AND SHEAR REACTIONS

$$w_{DD} := \frac{\max\left(\left|P_{A_max_6in}\right|, \left|P_{A_min_6in}\right|\right)}{2 \cdot \pi \cdot b_{DD}} = 0.778 \cdot \frac{kip}{in}$$

Distributed line load.

$$L_6 := \frac{r_{o_DD}}{4 a_{DD}} \cdot \left[\left(\frac{r_{o_DD}}{a_{DD}}\right)^2 - 1 + 2 \cdot \ln\left(\frac{a_{DD}}{r_{o_DD}}\right)\right] = 0.05$$

Loading constant. (Young, pg 458)

$$L_9 := \frac{r_{o_DD}}{a_{DD}} \cdot \left[\frac{1+\nu}{2} \cdot \ln\left(\frac{a_{DD}}{r_{o_DD}}\right) + \frac{1-\nu}{4} \cdot \left[1 - \left(\frac{r_{o_DD}}{a_{DD}}\right)^2\right]\right] = 0.26$$

Loading constant. (Young, pg 458)

$$C_5 := \frac{1}{2} \cdot \left[1 - \left(\frac{b_{DD}}{a_{DD}}\right)^2\right] = 0.306$$

Loading constant. (Young, pg 458)

$$C_8 := \frac{1}{2}\cdot\left[1 + \nu + (1-\nu)\cdot\left(\frac{b_{DD}}{a_{DD}}\right)^2\right] = 0.786$$

Loading constant. (Young, pg 458)

$$M_{a_DD} := w_{DD}\cdot a_{DD}\cdot\left(L_9 - \frac{C_8\cdot L_6}{C_5}\right) = 514.524\cdot\frac{in\cdot lbf}{in}$$

Unit radial bending moment at outer edge, a.

$$M_{b_DD} := \frac{w_{DD}\cdot a_{DD}}{C_5}\cdot\left(L_6\right) = 703.515\ lbf$$

Unit radial bending moment at inner edge, b.

$$\sigma_{a_DD} := \frac{6\cdot M_{a_DD}}{t_{plate}^2} = 1.976\cdot ksi$$

Required stresses due to axial load at the outer edge

$$\sigma_{b_DD} := \frac{6\cdot M_{b_DD}}{t_{plate}^2} = 2.701\cdot ksi$$

Required stresses due to axial load at the pipe

$$L_8 := \frac{1}{2}\cdot\left[1 + \nu + (1-\nu)\cdot\left(\frac{r_{o_DD}}{a_{DD}}\right)^2\right] = 0.786$$

Loading constant. (Young, pg 458)

$$C_8 = 0.786$$

Recall loading constant. (Young, pg 458)

$$L_5 := \frac{1}{2}\cdot\left[1 - \left(\frac{r_{o_DD}}{a_{DD}}\right)^2\right] = 0.306$$

Loading constant. (Young, pg 458)

$$C_5 = 0.306$$

Recall loading constant. (Young, pg 458)

$$M_{o_DD} := \frac{\sqrt{M_{V_DD}^2 + M_{H_DD}^2}}{2\cdot\pi\cdot b_{DD}} = 1.793\cdot\frac{in\cdot kip}{in}$$

Unit radial moment at line load.

$$M_{a1_DD} := M_{o_DD}\cdot\left(L_9 - \frac{C_8}{C_5}\cdot L_6\right) = 0.223\cdot\frac{in\cdot kip}{in}$$

Unit radial moment at outer edge, a.

$$M_{b1_DD} := \frac{M_{o_DD}}{C_5}\cdot L_5 = 1.793\cdot\frac{in\cdot kip}{in}$$

Unit radial moment at inner edge, b.

8.3.4.2.5 REQUIRED STRESSES

$\sigma_{a_DD} = 1.976 \cdot ksi$ — Outer Edge diaphragm stress due to axial load.

$\sigma_{b_DD} = 2.701 \cdot ksi$ — Inner edge diaphragm stress due to axial load.

$\sigma_{ma_DD} := \frac{6 \cdot M_{a1_DD}}{t_{plate}^2} = 856.508\ psi$ — Outer Edge diaphragm stress due to bending moment.

$\sigma_{mb_DD} := \frac{6 \cdot M_{b1_DD}}{t_{plate}^2} = 6.884 \cdot ksi$ — Inner edge diaphragm stress due to bending moment.

$\sigma_{Atotal} := \sigma_{a_DD} + \sigma_{ma_DD} = 2.832 \cdot ksi$

$\sigma_{\beta total} := \sigma_{b_DD} + \sigma_{mb_DD} = 9.586 \cdot ksi$

$\sigma_{critical} := \max\left(\left|\sigma_{Atotal}\right|, \left|\sigma_{\beta total}\right|\right) = 9.586 \cdot ksi$ — Maximum required stress from axial and moments.

8.3.4.2.6 - CAPACITIES

$\boxed{\Omega F_{y_DD} := \frac{F_{y_A240}}{\Omega_b} = 14.97 \cdot ksi}$ — Allowable flexural stress. (ANSI/AISC 360-10, Section F1.

8.3.4.2.7 - STRUCTURAL EVALUATION

$\sigma_r := \sigma_{critical} = 9.586 \cdot ksi$ — Required bending stress. (Young, pg 457)

$DCR_{DD} := \frac{\sigma_r}{\Omega F_{y_DD}} = 0.64$ — Bending Stress Design vs. Capacity Ratio at Section D-D.

$SECTION_DD_PLATE_STRESS_IS := \text{if}\left(DCR_{DD} \le 1.0, \text{"ADEQUATE"}, \text{"NOT_ADEQUATE"}\right) = \text{"ADEQUATE"}$

8.3.4.3 - EVALUATE ANCHOR PLATE AT SECTION E-E IN SHEAR

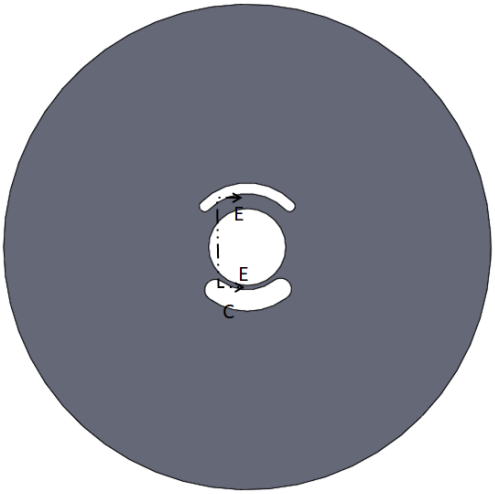

NOTE: Use load from 3 inch pipe carrier. There is no moment due to eccentricity since 3 inch pipe bears on the area.

NOTE: Axial Load due to horizontal force is bounded by the analysis of Section C-C.

8.3.4.3.1 - FREEBODY DIAGRAM AND INTERNAL LOADS

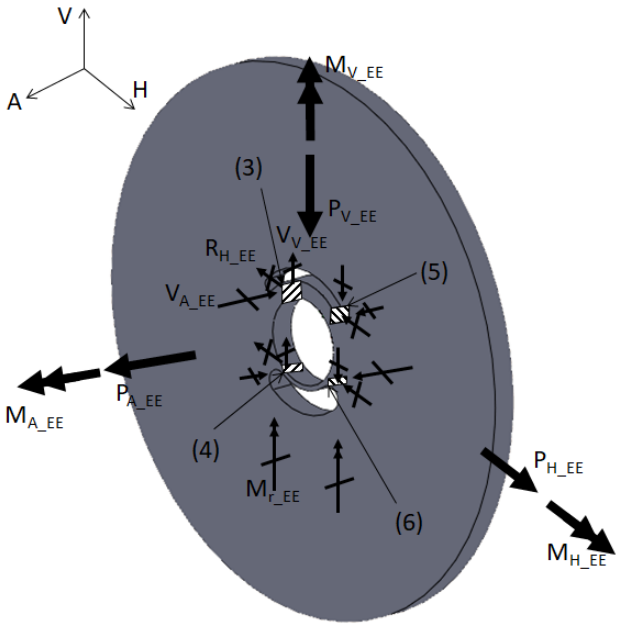

$P_{A_EE} := \max\left[\left(P_{A_min_3in}\right), \left(P_{A_max_3in}\right)\right] = 663 \cdot lbf$

$P_{H_EE} := P_{H_3in} = 566 \cdot lbf$

$P_{V_EE} := P_{V_3in} = 160\ lbf$

$M_{V_EE} := M_{V_3in} = 0.994 \cdot ft \cdot kip$

$M_{H_EE} := M_{H_3in} = 204 \cdot ft \cdot lbf$

$M_{A_EE} := M_{A_3in} = 99 \cdot ft \cdot lbf$

8.3.4.3.2 - REQUIRED SHEAR

NOTE: To derive shears reactions,

- Applied moment about normal axis, M_{A_3in} ,is taken out as a force-couple in the vertical direction.
- Applied moment about vertical axis, M_{V_3in}, is taken out as a force and couple in the axial direction.
- Applied moment about horizontal axis, M_H, is taken out as force and couple by top and bottom section.

8.3.4.3.2.1 - GEOMETRY

$L3 := r_{inner_vent} - \frac{dia_{carrier}}{2} = 0.719 \cdot in$ Width between carrier pipe and vent slot at face (3).

$L4 := r_{inner_drain} - \frac{dia_{carrier}}{2} = 0.219 \cdot in$ Width between carrier pipe and drain slot at face (4).

$L5 := L3 = 0.719 \cdot in$ Width between carrier pipe and vent slot at face (5).

$L6 := L4 = 0.219 \cdot in$ Width between carrier pipe and drain slot at face (6).

$d_{couple_EE} := 3in$ Couple distance between horizontal faces.

$d_{couple_EE_vert} := dia_{carrier} = 3.625 \cdot in$ Couple distance between vertical faces.

8.3.4.3.2.2 - APPORTION LOAD DISTRIBUTION BETWEEN THE FACES USING STIFFNESS

NOTE: Same material and thickness; hence, only use widths of sections

$$\%_{face3} := \frac{L3}{(L3 + L4 + L5 + L6)} = 38.333 \cdot \%$$

$$\%_{face4} := \frac{L4}{(L3 + L4 + L5 + L6)} = 11.667 \cdot \%$$

$$\%_{face5} := \frac{L5}{(L3 + L4 + L5 + L6)} = 38.333 \cdot \%$$

$$\%_{face6} := \frac{L6}{L3 + L4 + L5 + L6} = 11.667 \cdot \%$$

8.3.4.3.2.3 - MAX REQUIRED SHEAR IN AXIAL DIRECTION:

$$V_{A_EE3_max} := \%_{face3} \left| \frac{M_{V_3in}}{d_{couple_EE}} + \frac{M_{H_3in}}{d_{couple_EE_vert}} + P_{A_max_3in} \right| = 2.037 \cdot kip$$

Shear due to M_V, M_H and P_{A_max} in face (3).

$$V_{A_EE4_max} := \%_{face4} \left| \frac{M_{V_3in}}{d_{couple_EE}} + \frac{-M_{H_3in}}{d_{couple_EE_vert}} + P_{A_max_3in} \right| = 0.462 \cdot kip$$

Shear due to M_V, M_H and P_{A_max} in face (4).

$$V_{A_EE5_max} := \%_{face5} \cdot \left| \frac{-M_{V_3in}}{d_{couple_EE}} + \frac{M_{H_3in}}{d_{couple_EE_vert}} + P_{A_max_3in} \right| = 1.011 \cdot kip$$

Shear due to M_V, M_H and P_{A_max} in face (5).

$$V_{A_EE6_max} := \%_{face6} \left| \frac{-M_{V_3in}}{d_{couple_EE}} + \frac{-M_{H_3in}}{d_{couple_EE_vert}} + P_{A_max_3in} \right| = 0.465 \cdot kip$$

Shear due to M_V, M_H and P_{A_max} in face (6).

$$V_{A_EE3_min} := \%_{face3} \left| \frac{M_{V_3in}}{d_{couple_EE}} + \frac{M_{H_3in}}{d_{couple_EE_vert}} + -P_{A_min_3in} \right| = 1.555 \cdot kip$$

Shear due to M_V, M_H and P_{A_min} in face (3).

$$V_{A_EE4_min} := \%_{face4} \left| \frac{M_{V_3in}}{d_{couple_EE}} + \frac{-M_{H_3in}}{d_{couple_EE_vert}} + -P_{A_min_3in} \right| = 0.316 \cdot kip$$

Shear due to M_V, M_H and P_{A_min} in face (4).

$$V_{A_EE5_min} := \%_{face5} \cdot \left| \frac{-M_{V_3in}}{d_{couple_EE}} + \frac{M_{H_3in}}{d_{couple_EE_vert}} + -P_{A_min_3in} \right| = 1.493 \cdot kip$$

Shear due to M_V, M_H and P_{A_min} in face (5).

$$V_{A_EE6_min} := \%_{face6} \left| \frac{-M_{V_3in}}{d_{couple_EE}} + \frac{-M_{H_3in}}{d_{couple_EE_vert}} + P_{A_min_3in} \right| = 0.473 \cdot kip$$

Shear due to M_V, M_H and P_{A_min} in face (6).

$$V_{rA_EE_top} := \max\left(V_{A_EE3_max}, V_{A_EE3_min}, V_{A_EE5_max}, V_{A_EE5_min}\right) = 2.037 \cdot kip$$

Required max shear at top faces in axial direction.

$$V_{rA_EE_bot} := \max\left(V_{A_EE4_max}, V_{A_EE4_min}, V_{A_EE6_max}, V_{A_EE6_min}\right) = 0.473 \cdot kip$$

Required max shear at bottom faces in axial direction.

8.3.4.3.2.4 - REQUIRED SHEAR IN VERTICAL DIRECTION

$V_{V_EE3} := \%_{face3} \left| \frac{-M_{A_3in}}{d_{couple_EE}} + -P_{V_3in} \right| = 213.133 \cdot lbf$ Shear due to M_A and P_V in face (3).

$V_{V_EE4} := \%_{face4} \left| \frac{-M_{A_3in}}{d_{couple_EE}} + -P_{V_3in} \right| = 64.867 \cdot lbf$ Shear due to M_A and P_V in face (4).

$V_{V_EE5} := \%_{face5} \left| \frac{-M_{A_3in}}{d_{couple_EE}} + -P_{V_3in} \right| = 213.133 \cdot lbf$ Shear due to M_A and P_V in face (5).

$V_{V_EE6} := \%_{face6} \left| \frac{-M_{A_3in}}{d_{couple_EE}} + -P_{V_3in} \right| = 64.867 \cdot lbf$ Shear due to M_A and P_V in face (6).

$V_{rV_EE_top} := \max(V_{V_EE3}, V_{V_EE5}) = 213.133 \cdot lbf$ Required max shear at top faces in vertical direction.

$V_{rV_EE_bot} := \max(V_{V_EE4}, V_{V_EE6}) = 64.867\ lbf$ Required max shear at bottom faces in vertical direction.

8.3.4.3.3 - CAPACITIES

8.3.4.3.3.1 - ALLOWABLE STRENGTHS, TOP FACE

8.3.4.3.3.1.1 - SECTION GEOMETRY, TOP FACE

$b_{f_EE_top} := L3 = 0.719 \cdot in$ Plate width of cross section of top face. (H-14-111373, Sht. 1, D4)

$t_{f_EE} := t_{plate} = 1.25 \cdot in$ Plate thickness of cross section top face. (H-14-111373, Sht. 1, D4)

$A_{w_EE_top} := 2 \cdot b_{f_EE_top} \cdot t_{f_EE} = 1.797 \cdot in^2$ Area of rectangular HSS and box section top face. (ANSI/AISC 360-10, Section G.5)

8.3.4.3.3.1.2 - SAFETY FACTORS

$\Omega_v = 1.67$ Recall ASD safety factor for shear. (ANSI/AISC 360-10, Section G1)

8.3.4.3.3.1.3 - SHEAR COEFFICENT, TOP FACE

$t_{w1} := b_{f_EE_top} = 0.719 \cdot in$ Thickness of cross section.

$h_t := t_{plate} = 1.25 \cdot in$ Height of cross section.

$k_{vt} := 1.2$ (ANSI/AISC 360-10, Section G7)

$$C_{v2_top} := \begin{cases} 1.0 & \text{if } \frac{h_t}{t_{w1}} \le 1.10\cdot\sqrt{\frac{k_{vt}\cdot E_{A240}}{F_{y_A240}}} \\ \frac{1.10\cdot\sqrt{\frac{k_{vt}\cdot E_{A240}}{F_{y_A240}}}}{\frac{h_t}{t_{w1}}} & \text{if } \frac{h_t}{t_{w1}} > 1.10\cdot\sqrt{\frac{k_{vt}\cdot E_{A240}}{F_{y_A240}}} \wedge \frac{h_t}{t_{w1}} \le 1.37\cdot\sqrt{\frac{k_{vt}\cdot E_{A240}}{F_{y_A240}}} \\ \frac{1.51\cdot E_{A240}\cdot k_{vt}}{\left(\frac{h_t}{t_{w1}}\right)^2\cdot F_{y_A240}} & \text{otherwise} \end{cases}$$

$C_{v2_top} = 1$

8.3.4.3.3.1.4 - CALCULATE AXIAL SHEAR ALLOWABLE STRENGTH, TOP FACE

$V_{n_EE_top} := 0.6\cdot F_{y_A240}\cdot A_{w_EE_top}\cdot C_{v2_top} = 26.953\cdot kip$

Nominal shear strength of rectangular HSS, box sections, and other singly and doubly symmetric members. (ANSI/AISC 360-10, (eqn. G2-1))

$\boxed{\Omega V_{n_EE_top} := \frac{V_{n_EE_top}}{\Omega_v} = 16.14\cdot kip}$

Allowable shear strength of rectangular HSS and box section and other singly and doubly symmetric members. (ANSI/AISC 360-10, Section G1)

$V_{n_EE_weak_top} := 0.6\cdot F_{y_A240}\cdot b_{f_EE_top}\cdot t_{f_EE}\cdot C_{v2} = 13.477\cdot kip$

Nominal shear strength in weak axis. (ANSI/AISC 360-10, (eqn. G2-1))

$\boxed{\Omega V_{n_EE_weak_top} := \frac{V_{n_EE_weak_top}}{\Omega_v} = 8.07\cdot kip}$

Allowable shear strength in weak axis. (ANSI/AISC 360-10, Section G1.)

8.3.4.3.3.2 - ALLOWABLE STRENGTHS, BOTTOM FACE

8.3.4.3.3.2.1 - SECTION GEOMETRY, BOTTOM FACE

$b_{f_EE_bot} := L4 = 0.219\cdot in$

Plate width of cross section of bottom face. (H-14-111373, Sht. 1, D4)

$t_{f_EE} = 1.25\cdot in$

Recall plate thickness.

$A_{w_EE_bot} := 2b_{f_EE_bot}\cdot t_{f_EE} = 0.547\cdot in^2$

Area of rectangular HSS and box section bottom face (ANSI/AISC 360-10, Section G.4)

8.3.4.3.3.2.2 - SAFETY FACTORS, BOTTOM FACE

$\Omega_v = 1.67$ Recall ASD safety factor for shear. (ANSI/AISC 360-10, Section G1)

8.3.4.3.3.2.3 - SHEAR COEFFICENT, BOTTOM FACE

$h_b := b_{f_EE_bot} = 0.219 \cdot in$ Thickness of cross section.

$t_{w2} := t_{f_EE} = 1.25 \cdot in$ Height of cross section.

$k_{vb} := 1.2$ (ANSI/AISC 360-10, Section G7)

$$C_{v2_bot} := \begin{cases} 1.0 & \text{if } \frac{h_b}{t_{w2}} \le 1.10 \cdot \sqrt{\frac{k_{vb} \cdot E_{A240}}{F_{y_A240}}} \\ \frac{1.10 \cdot \sqrt{\frac{k_{vb} \cdot E_{A240}}{F_{y_A240}}}}{\frac{h_b}{t_{w2}}} & \text{if } \frac{h_b}{t_{w2}} > 1.10 \cdot \sqrt{\frac{k_{vb} \cdot E_{A240}}{F_{y_A240}}} \wedge \frac{h_b}{t_{w2}} \le 1.37 \cdot \sqrt{\frac{k_{vb} \cdot E_{A240}}{F_{y_A240}}} \\ \frac{1.51 \cdot E_{A240} \cdot k_{vb}}{\left(\frac{h_b}{t_{w2}}\right)^2 \cdot F_{y_A240}} & \text{otherwise} \end{cases}$$

$C_{v2_bot} = 1$

8.3.4.3.3.2.4 - CALCULATE AXIAL SHEAR ALLOWABLE STRENGTH, TOP FACE

$V_{n_EE_bot} := 0.6 \cdot F_{y_A240} \cdot A_{w_EE_bot} \cdot C_{v2_bot} = 8.203 \cdot kip$ Nominal shear strength of rectangular HSS, box sections, and other singly and doubly symmetric shapes. (ANSI/AISC 360-10, eqn (G2-1))

$\boxed{\Omega V_{n_EE_bot} := \frac{V_{n_EE_bot}}{\Omega_v} = 4.912 \cdot kip}$ Allowable shear strength of rectangular HSS and box section and other singly and doubly symmetric shapes (ANSI/AISC 360-10,Section G1)

$V_{n_EE_weak_bot} := 0.6 \cdot F_{y_A240} \cdot b_{f_EE_bot} \cdot t_{f_EE} \cdot C_{v2_bot} = 4.102 \cdot kip$ Nominal shear strength in weak axis. (ANSI/AISC 360-10, eqn (G2-1))

$\boxed{\Omega V_{n_EE_weak_bot} := \frac{V_{n_EE_weak_bot}}{\Omega_v} = 2.456 \cdot kip}$ Allowable shear strength in weak axis. (ANSI/AISC 360-10, Section G1)

8.3.4.3.4 -STRUCTURAL EVALUATION

8.3.4.3.4.1- TOP SHEAR, STRONG AXIS

$V_{rA_EE_top} = 2.037 \cdot kip$

Recall required shear at top faces in the strong (axial) axis.

$\Omega V_{n_EE_top} = 16.14 \cdot kip$

Recall allowable shear strength at top faces in the strong (axial) axis.

$$DCR_{top} := \frac{V_{rA_EE_top}}{\Omega V_{n_EE_top}} = 0.126$$

Demand-Capacity ratio is less than 1; therefore, adequate.

8.3.4.3.4.2- TOP SHEAR, WEAK AXIS

$V_{rV_EE_top} = 213.133\ lbf$

Recall required shear at top faces in the weak (vertical) axis.

$\Omega V_{n_EE_weak_top} = 8.07 \cdot kip$

Recall allowable shear strength at bottom faces in the strong (axial) axis.

$$DCR_{top_weak} := \frac{V_{rV_EE_top}}{\Omega V_{n_EE_weak_top}} = 0.026$$

Demand-Capacity ratio is less than 1; therefore, adequate.

8.3.4.3.4.3- BOTTOM SHEAR, STRONG AXIS

$V_{rA_EE_bot} = 0.473 \cdot kip$

Recall required shear at bottom faces in the strong (axial) axis.

$\Omega V_{n_EE_bot} = 4.912 \cdot kip$

Recall allowable shear strength at bottom faces in the strong (axial) axis.

$$DCR_{bot} := \frac{V_{rA_EE_bot}}{\Omega V_{n_EE_bot}} = 0.096$$

Demand-Capacity ratio is less than 1; therefore, adequate.

8.3.4.3.4.4- BOTTOM SHEAR, WEAK AXIS

$V_{rV_EE_bot} = 64.867\ lbf$

Recall required shear at bottom faces in the weak (vertical) axis.

$\Omega V_{n_EE_weak_bot} = 2.456 \cdot kip$

Recall allowable shear strength at bottom faces in the weak (vertical) axis.

$$DCR_{bot_weak} := \frac{V_{rV_EE_bot}}{\Omega V_{n_EE_weak_bot}} = 0.026$$

Demand-Capacity ratio is less than 1; therefore, adequate.

8.4 - CONCRETE CALCULATIONS

The calculations below utilize loads from calculation RPP-CALC-62528 which determines the loading at each of the pipe supports. These loadings include allowable stress design (ASD) factors in some cases (i.e. seismic) but not in all cases. This calculation will conservatively apply the loads directly from the results of RPP-CALC-62528 without applying additional ASD reduction factors. In cases where seismic loads are calculated within this calculation, a reduction factor of 0.7 is applied per ASCE 7-10, Section 2.4.1. In cases where dead loads resist overturn/sliding, a 0.6 factor is applied per ASCE 7-10, Section 2.4.1.

8.4.1 - DETERMINE THE SEISMIC LOADING PER ASCE 7 Chapter 13 FOR NONSTRUCTURAL COMPONENTS

This section determines the seismic loading per ASCE 7-10, Chapter 13 - Seismic Design Requirements for Nonstructural Components.

$S_{DS_h} := 0.588g$ — Horizontal five-percent damped design spectral response acceleration at short periods (TFC-ENG-STD-06, 3.5.5.2)

$z := 0ft$ — Height in structure of point of attachment of component with respect to the grade. (ASCE 7-10, 13.3.1)

$h := 0ft$ — Approximate average roof height of structure with respect to the grade. At grade (ASCE 7-10, 13.3.1)

$I_p := 1.5$ — Component importance factor per SDC rating. (ASCE 7-10, Section 13.1.3 and TFC-ENG-STD-06, 3.5.5.1)

$a_p := 2.5$ — Component amplification factor that varies from 1.0 to 2.5 (ASCE 7-10, Table 13.6-1). 2.5 selected for B31 piping.

$R_p := 6.0$ — Component response modification (ASCE 7-10, Table 13.6-1). Values of 6.0 to 12.0 possible for B31 piping. 6.0 selected for conservatism.

NOTE: The equations below were based on ASCE 7 equations solving for a force. These equations were divided by mass in order to solve for lateral and vertical design accelerations.

$$A_{pnom} := \frac{0.4 \cdot a_p \cdot S_{DS_h}}{\frac{\left(\frac{R_p}{1.2}\right)}{I_p}} \left[1 + 2\left(\frac{z}{h}\right)\right] = 0.18 \cdot g$$

Horizontal seismic acceleration. (ASCE 7-10, Equation 13.3-1)

$A_{pmax} := 1.6 \cdot S_{DS_h} \cdot I_p = 1.41 \cdot g$ — Maximum lateral seismic acceleration. (ASCE 7-10, Equation 13.3-2)

$A_{pmin} := 0.3 \cdot S_{DS_h} \cdot I_p = 0.26 \cdot g$ — Minimum lateral seismic acceleration. (ASCE 7-10, Equation 13.3-3)

$$A_p := \left(\begin{cases} A_{pmin} & \text{if } A_{pnom} < A_{pmin} \\ A_{pmax} & \text{if } A_{pnom} > A_{pmax} \\ A_{pnom} & \text{otherwise} \end{cases} \right) = 0.26 \cdot g$$

Design lateral acceleration to use for design purposes. (ASCE 7-10, 13.3.1)

$A_v := 0.2 \cdot S_{DS_h} = 0.12 \cdot g$ — Factored vertical seismic acceleration. (ASCE 7-10, 13.3.1)

8.4.2 - EVALUATE THE LATERAL STABILITY OF REINFORCED CONCRETE COLLAR BURIED IN SOIL - ONE TRANSFER LINE

8.4.2.1 - GEOMETRY

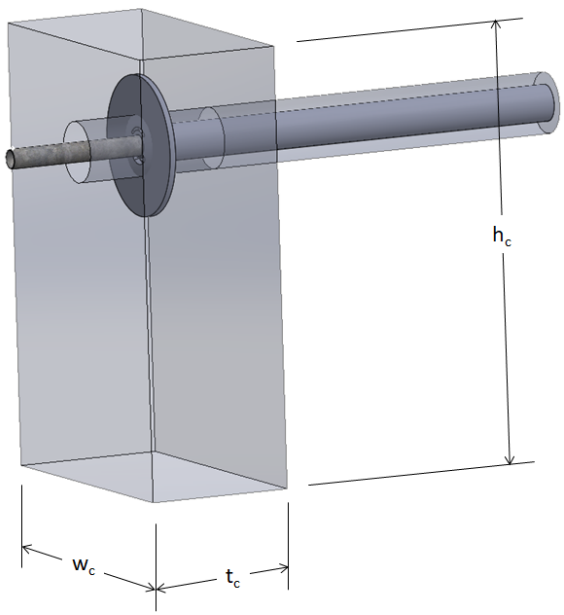

$w_c := (5ft) + 6in = 5.5\,ft$ Width of the concrete collar.

$h_c := 5ft + 6in = 5.5\,ft$ Height of the concrete collar.

$t_c := 2ft + 0in = 2\,ft$ Thickness of the concrete collar.

$V_c := w_c \cdot h_c \cdot t_c = 60.5 \cdot ft^3$ Volume of the concrete collar.

8.4.2.2 - MATERIAL PROPERTIES

$\rho_c := 150pcf$ Density of concrete. (ANSI/AISC 360-10, Table 17-12, *Densities of Common Materials*, pg 17-25)

$W_c := V_c \cdot \rho_c = 9075\,lbf$ Weight of the concrete collar.

$lat_{soil} := 150\,\frac{psf}{ft}$ Lateral bearing pressure for soil. (IBC 2015, Table 1806.2, Class 4)

$\mu_e := 0.25$ Coefficient of friction for lateral sliding resistance. (IBC 2015, Table 1806.2, Class 4)

$\gamma_{soil} := 110pcf$ Minimum soil density. (TFC-ENG-STD-06, Section 3.5.8)

$H_{soil} := 3in$ Distance from soil surface to top of concrete collar.

$H_{collar_bot} := H_{soil} + h_c = 5.75\,ft$ Distance from soil surface to bottom of concrete collar.

8.4.2.3 - APPLIED LOADS

$P_{A_min} := \left|P_{A_min_3in} + P_{A_min_6in}\right| = 16.797 \cdot kip$

$P_{A_max} := \left|P_{A_max_3in} + P_{A_max_6in}\right| = 11.999 \cdot kip$

Normal (Axial) Horizontal forces. (RPP-CALC-62528, Table 7-1, page 28)

$P_{vert} := \left|P_{V_3in}\right| + \left|P_{V_6in}\right| = 321\ lbf$

Maximum downward Live Load by pipe. (RPP-CALC-62528, Table 7-1, page 28)

$P_{LL} := \max\left(P_{A_min}, P_{A_max}\right) = 16.797 \cdot kip$

Maximum Horizontal Live Load by pipe.

$E_h := \frac{A_p}{g} \cdot W_c = 2.401 \cdot kip$

Horizontal Seismic Load.

$E_v := \frac{A_v}{g} \cdot W_c = 1.067 \times 10^3\ lbf$

Vertical Seismic Load.

$V_{base} := 0.75\left(0.7E_h\right) + 0.75P_{LL} = 13.858 \cdot kip$

Sliding force on the concrete collar base. (IBC 2015, Section 2.4.1, Load Combo 6b)

$R_r := \frac{V_{base}}{w_c} = 2.52 \cdot \frac{kip}{ft}$ where $w_c = 5.5\ ft$

Required sliding resistance load per foot width.

8.4.2.4 -FREEBODY DIAGRAM

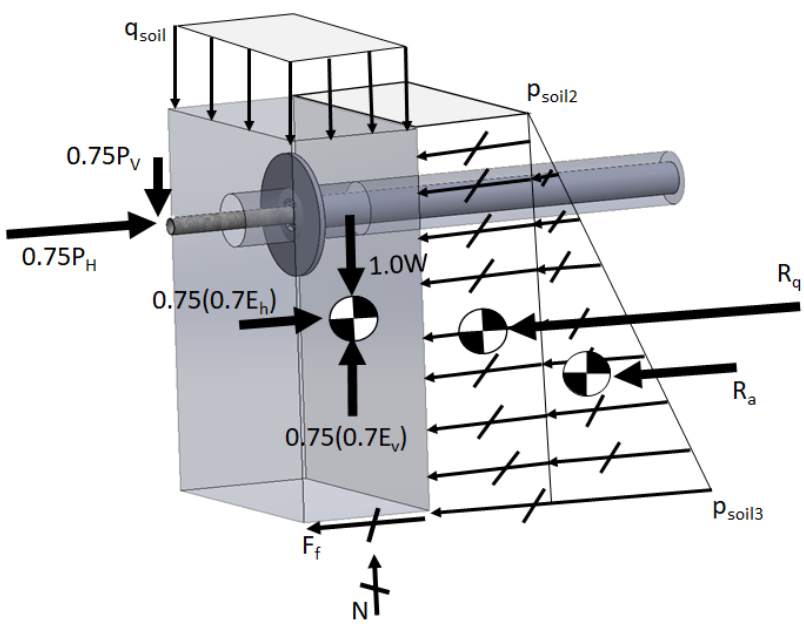

8.4.2.5 - LATERAL STABILITY

SOIL RESISTANCE:

$p_{soil2} := lat_{soil} \cdot H_{soil} = 37.5 \cdot psf$

Active earth lateral pressure at the top of the concrete collar.

$p_{soil3} := lat_{soil} \cdot H_{collar_bot} = 0.863 \cdot ksf$

Active earth lateral pressure at the bottom of the concrete collar.

$R_q := p_{soil2} \cdot h_c = 0.206 \cdot \frac{kip}{ft}$ — Lateral soil resistance due to surcharge (rectangular distribution).

$R_a := \frac{1}{2} p_{soil3} \cdot h_c = 2.372 \cdot \frac{kip}{ft}$ where $h_c = 5.5\,ft$ — Lateral soil resistance due to active soil pressure (triangular distribution).

$q_{soil} := \gamma_{soil} \cdot t_c \cdot H_{soil} = 0.055 \cdot \frac{kip}{ft}$ where $t_c = 2\,ft$ — Soil surcharge weight above collar.

$P_{base} := 1.0W_c - 0.75(0.7 \cdot E_v) = 8.515 \cdot kip$ — Normal force on the concrete collar base due to self weight and seismic. Conservatively neglect downward piping force.

$N_{block} := q_{soil} + \frac{P_{base}}{w_c} = 1.603 \cdot \frac{kip}{ft}$ where $w_c = 5.5\,ft$ — Total normal force with added surcharge weight.

$F_f := \mu_e \cdot N_{block} = 0.401 \cdot \frac{kip}{ft}$ where $\mu_e = 0.25$ — Friction Resistance due to normal force.

$R_{n_block} := R_a + R_q + F_f = 2.979 \cdot \frac{kip}{ft}$ — Total Resisting Force.

$DCR_{sliding} := \frac{R_r}{R_{n_block}} = 0.846$ where $R_r = 2.52 \cdot \frac{kip}{ft}$ — Demand to Capacity Ratio.

$R_{n_block} = 2.979 \cdot \frac{kip}{ft}$

8.4.2.6 - SOIL BEARING

$p_{b_soil} := 2000psf$ — Vertical foundation pressure for soil. (IBC 2015, Table 1806.2, Class 4)

$A_{b_concrete} := w_c \cdot t_c = 11\,ft^2$ — Concete collar footprint area.

$P_{allow} := p_{b_soil} \cdot A_{b_concrete} = 22 \cdot kip$ — Allowable soil.

$P_{soil} := 1.0W_c + 0.75(0.7 \cdot E_v) + 0.75P_{vert} = 9.876 \cdot kip$ — Required load including DL, S & downward pipe force. (IBC 2015, Section 2.4, Load Combo 6b)

where $W_c = 9075\,lbf$

$P_{vert} = 321\,lbf$

$E_v = 1 \times 10^3\,lbf$

$DCR_{soil_bearing} := \frac{P_{soil}}{P_{allow}} = 0.449$ — Demand-Capacity ratio is less than 1; therefore, adequate.

$SOIL_BEARING_IS := if(DCR_{soil_bearing} \le 1, "ADEQUATE", "NOT_ADEQUATE") = "ADEQUATE"$

8.4.3 - EVALUATE THE LATERAL STABILITY OF REINFORCED CONCRETE COLLAR BURIED IN SOIL - TWO TRANSFER LINES

8.4.3.1 - GEOMETRY

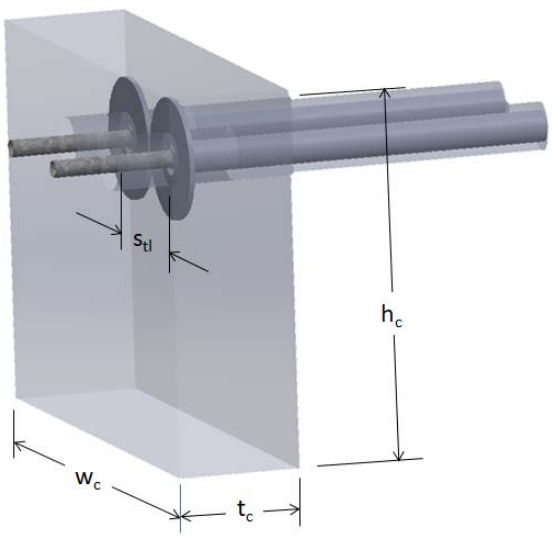

$s_{tl} := 2\,ft$ — Spacing between the transfer lines.

$n_{tl} := 2$ — Number of parallel transfer lines. Two 3" lines.

$w_c := (6 \cdot ft + 0\,in) \ldots + (n_{tl} - 1) \cdot s_{tl} = 8\,ft$ — Width of the concrete collar.

$h_c := 5\,ft + 6\,in = 5.5\,ft$ — Height of the concrete collar.

$t_c := 2\,ft + 0\,in = 2\,ft$ — Thickness of the concrete collar.

$V_c := w_c \cdot h_c \cdot t_c = 88 \cdot ft^3$ — Volume of the concrete collar.

NOTE: Figure is shown off-center (conservative). Actual location of pipe assemblies will be centered on the concrete collar.

8.4.3.2 - MATERIAL PROPERTIES

$\rho_c := 150\,pcf$ — Density of concrete. (ANSI/AISC 360-10, Table 17-12, *Densities of Common Materials*, pg 17-25)

$W_c := V_c \cdot \rho_c = 13200\,lbf$ — Weight of the concrete collar.

$lat_{soil} := 150\,\frac{psf}{ft}$ — Lateral bearing pressure for soil. (IBC 2015, Table 1806.2, Class 4)

$\mu_e := 0.25$ — Coefficient of friction for lateral sliding resistance. (IBC 2015, Table 1806.2, Class 4)

$\gamma_{soil} := 110\,pcf$ — Minimum soil density. (TFC-ENG-STD-06, Section 3.5.8)

$H_{soil} := 1\,ft$ — Distance from soil surface to top of concrete collar. (conservative)

$H_{collar_bot} := H_{soil} + h_c = 6.5\,ft$ — Distance from soil surface to bottom of concrete collar. (conservative)

8.4.3.3 - APPLIED LOADS

$P_{A_min} := \left|P_{A_min_3in} + P_{A_min_6in}\right| = 16.797 \cdot kip$

Normal (Axial) Horizontal forces. (RPP-CALC-62528, Table 7-1, page 28)

$P_{A_max} := \left|P_{A_max_3in} + P_{A_max_6in}\right| = 11.999 \cdot kip$

$P_{vert_total} := n_{tl} \cdot \left(\left|P_{V_3in}\right| + P_{V_6in}\right) = 642\ lbf$

Maximum downward Live Load by pipe. (RPP-CALC-62528, Table 7-1, page 28)

$P_{LL} := \max\left(P_{A_min}, P_{A_max}\right) = 16.797 \cdot kip$

Maximum Horizontal Live Load by pipe.

$E_h := n_{tl} \cdot \left(\frac{A_p}{g} \cdot W_c\right) = 6.985 \cdot kip$

Horizontal Seismic Load.

$E_v := n_{tl} \cdot \left(\frac{A_v}{g} \cdot W_c\right) = 3.105 \cdot kip$

Vertical Seismic Load.

$V_{base} := 0.75\left(0.7E_h\right) + 0.75\left(n_{tl} \cdot P_{LL}\right) = 28.863 \cdot kip$

Sliding force on the concrete collar base. (IBC 2015, Section 2.4.1, Load Combo 6b)

$R_r := \frac{V_{base}}{w_c} = 3.608 \cdot \frac{kip}{ft}$ where $w_c = 8\ ft$

Required sliding resistance load per foot width.

8.4.3.4 -FREEBODY DIAGRAM

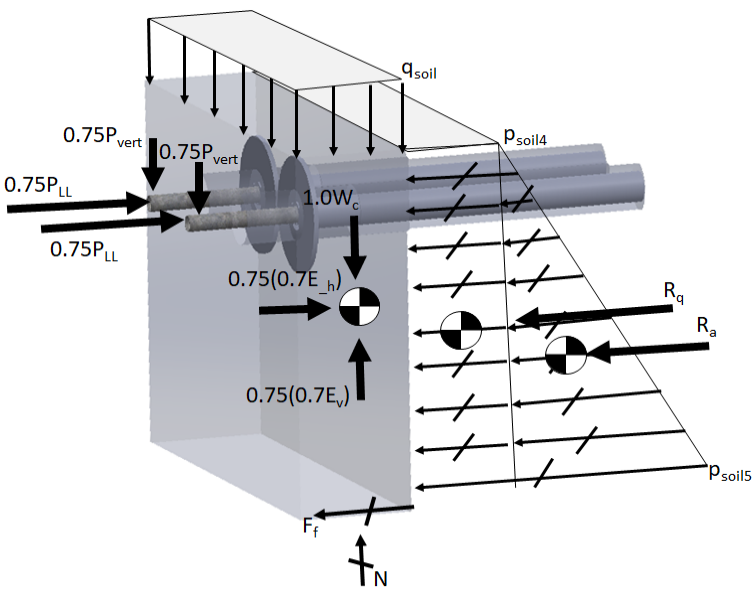

8.4.3.5 - LATERAL STABILITY

SOIL RESISTANCE:

$p_{soil4} := lat_{soil} \cdot H_{soil} = 150 \cdot psf$

Active earth lateral pressure at the top of the concrete collar.

$p_{soil5} := lat_{soil} \cdot H_{collar_bot} = 0.975 \cdot ksf$

Active earth lateral pressure at the bottom of the concrete collar.

$R_q := p_{soil4} \cdot h_c = 0.825 \cdot \frac{kip}{ft}$ Lateral soil resistance due to surcharge (rectangular distribution).

$R_a := \frac{1}{2} p_{soil5} \cdot h_c = 2.681 \cdot \frac{kip}{ft}$ where $h_c = 5.5\,ft$ Lateral soil resistance due to active soil pressure (triangular distribution).

$q_{soil} := \gamma_{soil} \cdot t_c \cdot H_{soil} = 0.22 \cdot \frac{kip}{ft}$ where $t_c = 2\,ft$ Soil surcharge weight above collar.

$P_{base} := 1.0W_c - 0.75(0.7 \cdot E_v) = 11.57 \cdot kip$ Normal force on the concrete collar base due to self weight and seismic. Conservatively neglect downward piping force.

$N_{block} := q_{soil} + \frac{P_{base}}{w_c} = 1.666 \cdot \frac{kip}{ft}$ where $w_c = 8\,ft$ Total normal force with added surcharge weight.

$F_f := \mu_e \cdot N_{block} = 0.417 \cdot \frac{kip}{ft}$ where $\mu_e = 0.25$ Friction Resistance due to normal force.

$R_{n_block} := R_a + R_q + F_f = 3.923 \cdot \frac{kip}{ft}$ Total Resisting Force.

$DCR_{sliding} := \frac{R_r}{R_{n_block}} = 0.92$ where $R_r = 3.608 \cdot \frac{kip}{ft}$, $R_{n_block} = 3.923 \cdot \frac{kip}{ft}$ Demand to Capacity Ratio.

8.4.3.6 - SOIL BEARING

$p_{b_soil} := 2000psf$ Veritical foundation pressure for soil. (IBC 2015, Table 1806.2, Class 4)

$A_{b_concrete} := w_c \cdot t_c = 16\,ft^2$ Concete collar footprint area.

$P_{allow} := p_{b_soil} \cdot A_{b_concrete} = 32 \cdot kip$ Allowable soil.

$P_{soil} := 1.0W_c + 0.75(0.7 \cdot E_v) + 0.75P_{vert_total} = 15.311 \cdot kip$ Required load including DL, S & downward pipe force. (IBC 2015, Section 2.4, Load Combo 6b)

where $W_c = 13 \cdot kip$

$P_{vert_total} = 0.642 \cdot kip$

$E_v = 3 \cdot kip$

$DCR_{soil_bearing} := \frac{P_{soil}}{P_{allow}} = 0.478$ Demand-Capacity ratio is less than 1; therefore, adequate.

$SOIL_BEARING_IS := if(DCR_{soil_bearing} \le 1, "ADEQUATE", "NOT_ADEQUATE") = "ADEQUATE"$

8.4.4 - EVALUATE CONCRETE COLLAR FOR PUNCHING SHEAR

NOTE: This is judged to be the governing concrete failure mode.

8.4.4.1 - GEOMETRY

$d_{pl} := 1ft + 11in$ Diameter of plate. (H-14-111373, Sh 1, Detail 4)

$cover := 3in$ Concrete cover.

$d_r := \frac{t_c}{2} - cover = 9.00 \cdot in$ Effective failure plane. (Lindeburg, pg 55-3)

$d_{ps} := d_{pl} + d_r = 32 \cdot in$ Diameter of the critical section for punching shear. (Lindeburg, pg 55-3)

8.4.4.2 - CONCRETE PROPERTIES

$f'_c := 4500 \cdot psi$ Compressive strength of concrete.

8.4.4.3 - APPLIED LOADS, SHEAR AND MOMENTS

Table 8.4.3.3-1 - Maximum Anchor Reaction Loads (On one side of Anchor)

Pit Anchor or Field/ Interface Anchor	Nominal Line Size (in)	Normal (Axial) Horizontal Force (lbf) P_A		Maximum Lateral Horizontal Force (lbf) P_H	Maximum Lateral Vertical Force (lbf) P_V	Maximum Torsional Moment about Normal Axis (ft-lbf) M_A	Maximum Moment about Lateral Horizontal Axis (ft-lbf) M_H	Maximum Moment about Lateral Vertical Axis (ft-lbf) M_V
		Minimum	Maximum					
Field	3	-595	663	556	-160	99	204	994
Field	6	-16202	11336	860	-161	565	801	1545

$P_u := P_{LL} = 16.797 \cdot kip$ Recall Max Normal Horizontal Force Loading on the plate.(RPP-CALC-62528, Table 7-1, *Bounding Anchor Reaction Loads*, page 28)

$M_{A_3in} = 99 \cdot ft \cdot lbf$ $M_{A_6in} = 565 \cdot ft \cdot lbf$

$M_{V_3in} = 0.994 \cdot ft \cdot kip$ $M_{V_6in} = 1.545 \cdot ft \cdot kip$

$M_{H_3in} = 0.204 \cdot ft \cdot kip$ $M_{H_6in} = 0.801 \cdot ft \cdot kip$

$M_u := \sqrt{(M_{V_3in} + M_{V_6in})^2 + (M_{H_3in} + M_{H_6in})^2} = 2.731 \cdot ft \cdot kip$ Derived moment on plate.

8.4.4.4 - CAPACITIES

$A_{ps} := \pi \cdot d_{pl} \cdot d_{ps} = 2.312 \times 10^3 \cdot in^2$ — Area of critical section for punching shear. (Lindeburg, pg 55-3, Figure 55.4)

$A_f := w_c \cdot h_c = 44 \cdot ft^2$ — Foundation area.

$\alpha_s := 40$ — Value for interior columns. (ACI 318, 22.6.5.3)

$\lambda := 1$ — Concrete modification factor. (ACI 318, Table 19.2.4.2)

$\beta := 1$ — Ratio of long side to short side of concentrated load. (ACI 318, Table 22.6.5.2, footnote)

$b_o := \pi \cdot (d_{pl} + d_{ps}) = 172.788 \cdot in$ — Perimeter of shear prism. (ACI 318, 22.6.4.1)

$$\nu_c := \min\left[4 \cdot \lambda \cdot \sqrt{\frac{f'_c}{psi}}, \left(2 + \frac{4}{\beta}\right) \cdot \lambda \cdot \sqrt{\frac{f'_c}{psi}}, \left(2 + \frac{\alpha_s \cdot d_{ps}}{b_o}\right) \cdot \lambda \cdot \sqrt{\frac{f'_c}{psi}}\right] \cdot psi = 268.328 \cdot psi$$

Stress corresponding to nominal two-way shear strength of slab/footing. (ACI 318, Table 22.6.5.2)

$$J_c := \frac{d_{ps} \cdot (d_{pl} + d_{ps})^3}{6} + \frac{(d_{pl} + d_{ps}) \cdot d_{ps}^3}{6} + \frac{d_{ps} \cdot (d_{pl} + d_{ps}) \cdot (d_{pl} + d_{ps})^2}{2} = 185.65 \cdot ft^4$$

Property of assumed critical section. (ACI 318, Section 8.4.4.2.3)

$R_u := \frac{P_u \cdot A_{ps}}{A_f} = 6129.77\ lbf$ — Resultant of the factored soil pressure acting over the loading area. (Lindeburg, eq 55.14)

$\gamma_f := \min\left(\frac{1.25}{1 + \frac{2}{3} \cdot \sqrt{\beta}}, 1\right) = 0.75$ — Factor used to determine the fraction of moment transferred by slab flexure at slab-column connections. (ACI 318, Table 8.4.2.3.4)

$\gamma_\nu := 1 - \gamma_f = 0.25$ — Fraction of the moment that will contribute to shear stress. (Lindeburg, eq 55.15 and ACI 318, 8.4.4.2.2)

8.4.4.5 -STRUCTURAL EVALUATION

$$\nu_u := 1.6\left(\frac{P_u}{A_{ps}} + \frac{\gamma_\nu \cdot M_u \cdot \frac{d_{ps}}{2}}{J_c}\right) = 11.678\ psi$$

Shear stress due to factored loads using load combination ACI 318-14. Eqn (5.3.1b). (Lindeburg, eq 55.13; ACI 318, 8.4.4.2.3 and 8.4.2.3.4)

$\phi := 0.75$ — Capacity reduction factor. (ACI 318, Table 21.2.1)

$DCR_{punching_shear} := \frac{\nu_u}{\phi \cdot \nu_c} = 0.06$ — Demand-Capacity ratio is less than 1; therefore, adequate.

$PUNCHING_SHEAR_IS := \text{if}(DCR_{punching_shear} \le 1, \text{"ADEQUATE"}, \text{"NOT_ADEQUATE"}) = \text{"ADEQUATE"}$

8.4.5 - REINFORCEMENT REQUIREMENTS FOR CONCRETE COLLAR

NOTE: Use minimum reinforcement limits for nonprestressed two-way slab (e.g., Each Way, E.W.) and shrinkage to get required reinforcement vertically and horizontally, respectively.

8.4.5.1 - GEOMETRY

$cover := 3in$ — Concrete cover for cast against and permanently in contact with ground. ACI 318-14, Table 20.6.1.3.1)

$h_o := t_c = 2\,ft$ — Height of slab.

$d_o := h_o - cover = 21 \cdot in$ — Slab depth.

$b_o := 1ft = 12 \cdot in$ — Per foot width of reinforcing area.

$A_g := d_o \cdot b_o = 252 \cdot in^2$ — Gross Area of concrete section.

$f_y := 60000psi$ — Yield Strength of grade 60 reinforcement.

8.4.5.2 - NONPRESTRESSED TWO-WAY MINIMUM REINFORCEMENT

$$A_{s.min} := \begin{cases} 0.0020 \cdot A_g & \text{if } f_y < 60000psi \\ \dfrac{0.0018 \cdot 60000psi}{f_y} \cdot A_g & \text{if } f_y \geq 60000psi \wedge \dfrac{0.0018 \times 60000psi}{f_y} \cdot A_g > 0.0014 \cdot A_g \\ 0.0014 \cdot A_g & \text{otherwise} \end{cases} = 0.4536 \cdot in^2$$

ACI 318-14, Table 8.6.1.1 $A_{s,min}$ for nonstressed two-way slabs)

8.4.5.3 - SHRINKAGE MINIMUM REINFORCEMENT

NOTE: Add minimum reinforcement per ACI 318-14, Table 24.4.3.2 - *Minimum ratos of Deformed Shrinkage and Temperature reinforcement Area to gross concrete Area*.

$$\rho_{min} := \begin{cases} 0.0020 & \text{if } f_y < 60000psi \\ \dfrac{0.0018 \cdot 60000psi}{f_y} & \text{if } f_y \geq 60000psi \wedge \dfrac{0.0018 \times 60000psi}{f_y} > 0.0014 \\ 0.0014 & \text{otherwise} \end{cases} = 0.0018$$

Required reinforcement ratio for shrinkage. (ACI 318-14, Section 24.4.3.2.)

$spacing_{shrink} := \min(5 \cdot h_o, 18in) = 18 \cdot in$ — Minimum spacing requirements.

$$A_{reqd_shrink} := \rho_{min} \cdot \frac{spacing_{shrink}}{\left(12 \frac{in}{ft}\right)} \cdot d_o = 0.68 \cdot in^2$$

Required rebar area.

8.4.5.4 REQUIRED REINFORCEMENT CRITERIA

$no_{faces} := 2$ Rebar will be put on Each Face (E.F.).

$$A_{reqd} := \frac{\max\left[A_{s.min}, \left(A_{reqd_shrink} \cdot \frac{b_o}{spacing_{shrink}}\right)\right]}{2} = 0.227 \cdot in^2$$

NOTE: $A_{required_shrink}$ adjusted for comparison.

$$dia_{bar} := \sqrt{\frac{4 \cdot A_{reqd}}{\pi}} = 0.537 \cdot in$$

Required diameter.

$$no_{bar} := ceil\left(\frac{8 \cdot dia_{bar}}{in}\right) = 5$$

Required Rebar number.

NOTE: Provide #5 rebar Each-Way, Each Face (EWEF) with 3" minimum cover for the concrete collar.

8.5 - CONNECTIONS

8.5.1 - DETERMINE ADEQUACY OF WELD BETWEEN CARRIER PIPE (3" dia) AND ANCHOR PLATE

8.5.1.1 - WELD GEOMETRY

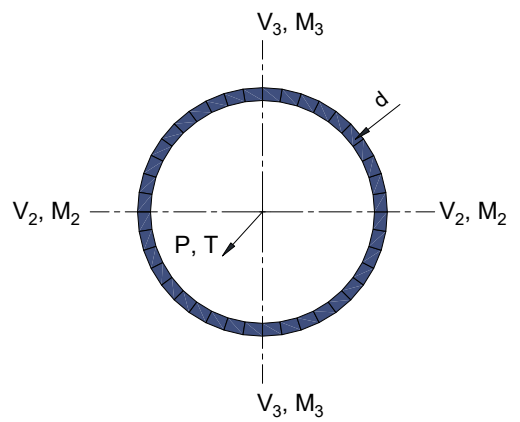

$d_3 := 3 \cdot in + \frac{5}{8} in = 3.625 \cdot in$ Diameter of weld. (H-14-111373, Sh 1, C8, Detail 3

$w_{act_3} := \frac{1}{8} \cdot in$ Weld size. (H-14-111373, Sh 1, C8, Detail 3)

8.5.1.2 - MATERIAL PROPERTIES

$F_{EXX} := 70ksi$ Ultimate stress of the weld metal.

8.5.1.3 - WELD CAPACITIES

Inputs from AISC, Table J2.5:

$\Omega_{w3} := 2.0$ The safety factor for welds.

$R_{n_3} := 0.6 \cdot F_{EXX} = 42 \cdot ksi$ Weld design strength.

8.5.1.4 - WELD PROPERTIES USING BLODGETT 1991, TABLE 5, PAGE 7.4-7

Weld Properties Per Blodgett 1991, Table 5, Page 7.4-7.

$C_{w_3} := \frac{d_3}{2} = 1.81 \cdot in$ The distance to the outer fiber.

$A_{w_3} := \pi \cdot d_3 = 11.39 \cdot in$ The linear area of the weld.

$A_{w_s_3} := \frac{1}{2} \cdot \pi \cdot d_3 = 5.69 \cdot in$ The linear shear area of the weld.

$S_{w_3} := \frac{\pi \cdot d_3^{\,2}}{4} = 10.32 \cdot in^2$ The linear section modulus.

$J_{w_3} := \frac{\pi \cdot d_3^{\,3}}{4} = 37.41 \cdot in^3$ The linear polar moment of inertia.

8.5.1.5 - APPLIED LOADS

Table 8.5.1.5-1 - Maximum Anchor Reaction Loads (On one side of Anchor)

Pit Anchor or Field/Interface Anchor	Nominal Line Size (in)	Normal (Axial) Horizontal Force (lbf) (+ = away from "wall") P		Maximum Lateral Horizontal Force (lbf) V_2	Maximum Lateral Vertical Force (lbf) v_3	Maximum Torsional Moment about Normal Axis (ft-lbf) T_o	Maximum Moment about Lateral Horizontal Axis (ft-lbf) M_2	Maximum Moment about Lateral Vertical Axis (ft-lbf) M_3
		Minimum	Maximum					
Field	3	-595	663	566	-160	99	204	994

Connection forces and moments. (RPP-CALC-62528, Table 7-1, *Bounding Anchor Reaction Loads*, page 28)

$P := \max\left(\left|P_{A_min_3in}\right|, \left|P_{A_max_3in}\right|\right) = 663\,lbf$ $V_2 := \left|P_{H_3in}\right| = 566\,lbf$ $V_3 := \left|P_{V_3in}\right| = 160\,lbf$

$T_o := \left|M_{A_3in}\right| = 99 \cdot ft \cdot lbf$ $M_2 := \left|M_{H_3in}\right| = 204 \cdot ft \cdot lbf$ $M_3 := \left|M_{V_3in}\right| = 994 \cdot ft \cdot lbf$

8.5.1.6 - SHEAR AND MOMENT REACTIONS

The resultant vectors for the bending moments and shears in the directions of 2-2 and 3-3 axes are:

$M_r := \sqrt{M_2^2 + M_3^2} = 1014.72 \cdot ft \cdot lbf$ $V_r := \sqrt{V_2^2 + V_3^2} = 588.18\,lbf$

8.5.1.7 - STRUCTURAL EVALUATION

$$A_{lin_3} := \sqrt{\left(\frac{P}{A_{w_3}} + \frac{M_r}{S_{w_3}}\right)^2 + \left(\frac{V_r}{A_{w_s_3}} + \frac{T_o \cdot C_{w_3}}{J_{w_3}}\right)^2} = 1.248 \times 10^3 \cdot \frac{lbf}{in}$$

Linear weld stress.

$$R_{u_3} := \frac{A_{lin_3}}{0.707 w_{act_3}} = 14.127 \cdot ksi$$

Actual stress in the weld.

$n_{w_3} := 2$

Number of welds resisting the load per location. (H-14-111373, Sh 1, C8, Detail 3)

$$DCR_3 := \frac{\Omega_{w3} \cdot R_{u_3}}{R_{n_3} \cdot n_{w_3}} = 0.34 \quad \text{where} \quad \frac{R_{u_3}}{n_{w_3}} = 7.063 \cdot ksi$$

The demand/capacity ratio is < 1; therefore, OK.

$CARRIER_PIPE_WELD_IS := \text{if}\left(DCR_3 \le 1, \text{"ADEQUATE"}, \text{"NOT_ADEQUATE"}\right) = \text{"ADEQUATE"}$

8.5.2 - DETERMINE ADEQUACY OF WELD BETWEEN ENCASEMENT PIPE (6" dia) AND ANCHOR PLATE

8.5.2.1 - WELD GEOMETRY

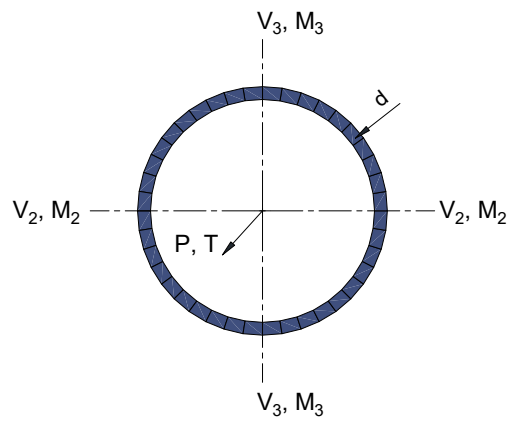

$d_6 := 2\cdot\left(3in + \frac{1}{32}in\right) = 6.062\cdot in$ Diameter of weld (H-14-111373, Sht. 1, B7)

$w_{act_6} := \frac{1}{8}\cdot in$ Weld size. (H-14-111373, Sh 1, B7)

8.5.2.2 - MATERIAL PROPERTIES

$F_{EXX} = 70\cdot ksi$ Ultimate stress of the weld metal.

8.5.2.3 - WELD CAPACITIES

Inputs from AISC, Table J2.5:

$\Omega_{w6} := 2.0$ The safety factor for welds.

$R_{n_6} := 0.6\cdot F_{EXX} = 42\cdot ksi$ Weld design strength.

8.5.2.4 - WELD PROPERTIES USING BLODGETT 1991, TABLE 5, PAGE 7.4-7

Weld Properties Per Blodgett 1991, Table 5, Page 7.4-7.

$C_{w_6} := \frac{d_6}{2} = 3.03\cdot in$ The distance to the outer fiber.

$A_{w_6} := \pi\cdot d_6 = 19.05\cdot in$ The linear area of the weld.

$A_{w_s_6} := \frac{1}{2}\cdot\pi\cdot d_6 = 9.52\cdot in$ The linear shear area of the weld.

$S_{w_6} := \frac{\pi\cdot d_6^{\,2}}{4} = 28.87\cdot in^2$ The linear section modulus.

$J_{w_6} := \frac{\pi\cdot d_6^{\,3}}{4} = 175.00\cdot in^3$ The linear polar moment of inertia.

8.5.2.5 - APPLIED LOADS

Table 8.5.2.5-1 - Maximum Anchor Reaction Loads (On one side of Anchor)

Pit Anchor or Field/Interface Anchor	Nominal Line Size (in)	Normal (Axial) Horizontal Force (lbf) (+ = away from "wall") P		Maximum Lateral Horizontal Force (lbf) V_2	Maximum Lateral Vertical Force (lbf) v_3	Maximum Torsional Moment about Normal Axis (ft-lbf) T_o	Maximum Moment about Lateral Horizontal Axis (ft-lbf) M_2	Maximum Moment about Lateral Vertical Axis (ft-lbf) M_3
		Minimum	Maximum					
Field	6	-16202	11336	860	-161	565	801	1545

Connection forces and moments. (RPP-CALC-62528, *Bounding Anchor Reaction Loads,* page 28)

$P_6 := \max(|P_{A_max_6in}|, |P_{A_min_6in}|) = 16.202 \cdot kip$ $V_{2_6} := |P_{H_6in}| = 860\ lbf$ $V_{3_6} := |P_{V_6in}| = 161\ lbf$

$T_{o6} := |M_{A_6in}| = 565 \cdot ft \cdot lbf$ $M_{2_6} := |M_{H_6in}| = 801 \cdot ft \cdot lbf$ $M_{3_6} := |M_{V_6in}| = 1545 \cdot ft \cdot lbf$

8.5.2.6 - SHEARS AND MOMENTS

The resultant vectors for the bending moments and shears in the directions of 2-2 and 3-3 axes are:

$M_{r_6} := \sqrt{M_{2_6}^2 + M_{3_6}^2} = 1740.29 \cdot ft \cdot lbf$ $V_{r_6} := \sqrt{V_{2_6}^2 + V_{3_6}^2} = 874.941\ lbf$

8.5.2.7 - STRUCTURAL EVALUATION

$$A_{lin_6} := \sqrt{\left(\frac{P_6}{A_{w_6}} + \frac{M_{r_6}}{S_{w_6}}\right)^2 + \left(\frac{V_{r_6}}{A_{w_s_6}} + \frac{T_{o6} \cdot C_{w_6}}{J_{w_6}}\right)^2} = 1.588 \times 10^3 \cdot \frac{lbf}{in}$$

Linear weld stress.

$$R_{u_6} := \frac{A_{lin_6}}{0.707 w_{act_6}} = 17.969 \cdot ksi$$

Actual stress in the weld.

$$DCR_6 := \frac{\Omega_{w6} \cdot R_{u_6}}{R_{n_6}} = 0.86$$

The demand/capacity ratio is < 1; therefore, OK.

ENCASEMENT_PIPE_WELD_IS := if$(DCR_6 \le 1, \text{"ADEQUATE"}, \text{"NOT_ADEQUATE"}) = \text{"ADEQUATE"}$

8.5.3 - DETERMINE ADEQUACY OF WELD BETWEEN CARRIER PIPE (3" dia) AND PIPE GUIDE

8.5.3.1 - WELD GEOMETRY

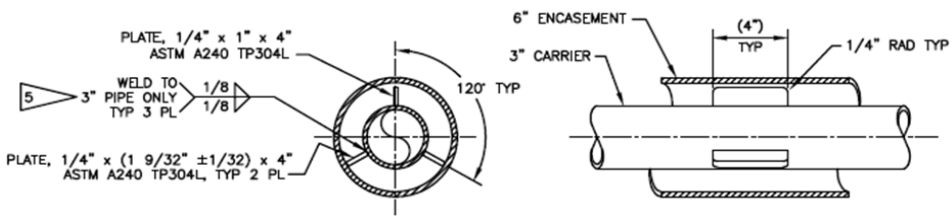

(H-14-111373, Sht. 1, D7, Detail 2)

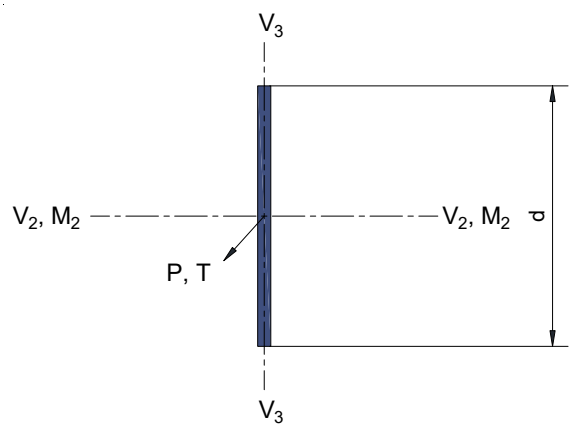

$d := 3 \cdot in$ Weld length.

$w_{act} := \frac{1}{8} \cdot in$ Weld size.

8.5.3.2 - MATERIAL PROPERTIES

$F_{EXX} = 70 \cdot ksi$ Ultimate stress of the weld metal.

8.5.3.3 - WELD CAPACITIES

Inputs from AISC 2010, Table J2.5:

$\Omega := 2.0$ The safety factor for welds.

$R_n := 0.6 \cdot F_{EXX}$ $R_n = 42 \cdot ksi$ Weld design strength.

8.5.3.4 - APPLIED LOADS, SHEARS AND MOMENTS

Connection forces and moments (See Section 8.2).

$P := P_A = 1269.7\,lbf$ $V_2 := V_{r_pipe_guide} = 540.2\,lbf$ $V_3 := 0 \cdot lbf$ $T := 0 \cdot in \cdot lbf$ $M_2 := 0 \cdot in \cdot lbf$

8.5.3.5 - WELD PROPERTIES

Weld Properties Per Blodgett 1991, Table 5, Page 7.4-7.

$C_3 := \frac{d}{2}$ $\quad C_3 = 1.5 \cdot in$ — The distance from the neutral axis to the outer fiber along the 3-3 axis.

$A_w := d$ $\quad A_w = 3 \cdot in$ — The linear area of the weld.

$A_{w2} := d$ $\quad A_{w2} = 3 \cdot in$ — The linear shear area of the weld along the 2-2 axis.

$A_{w3} := \frac{2}{3} \cdot d$ $\quad A_{w3} = 2 \cdot in$ — The linear shear area of the weld along the 3-3 axis.

$S_{w2} := \frac{d^2}{6}$ $\quad S_{w2} = 1.5 \cdot in^2$ — The linear section modulus about the 2-2 axis.

$J_w := \frac{d^3}{12}$ $\quad J_w = 2.25 \cdot in^3$ — The linear polar moment of inertia.

8.5.3.6 - STRUCTURAL EVALUATION

$$A_{lin} := \sqrt{\left(\frac{P}{A_w} + \frac{M_2}{S_{w2}}\right)^2 + \left(\frac{V_2}{A_{w2}} + \frac{T \cdot C_3}{J_w}\right)^2 + \left(\frac{V_3}{A_{w3}}\right)^2} \quad A_{lin} = 459.96 \cdot \frac{lbf}{in}$$

Linear weld stress.

$R_u := \frac{A_{lin}}{0.707 w_{act}}$ $\quad R_u = 5.2 \cdot ksi$ — Actual stress in the weld.

$DCR_{guide} := \frac{\Omega \cdot R_u}{R_n} = 0.25$ — The demand/capacity ratio is < 1; therefore, OK.

PIPE_GUIDE_WELD_IS := if(DCR_guide ≤ 1, "ADEQUATE", "NOT_ADEQUATE") = "ADEQUATE"

8.5.4 - DETERMINE ADEQUACY OF WELD BETWEEN CARRIER PIPE (3" dia) AND PIPE SUPPORT

8.5.4.1 - WELD GEOMETRY

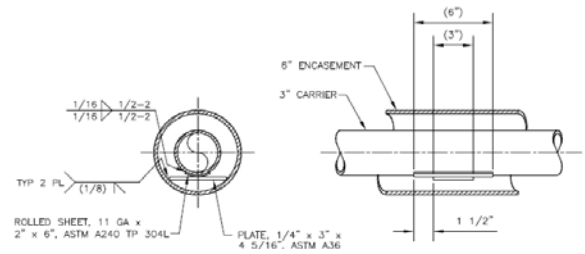

(H-14-111373, Sht. 1, E7, Detail 1)

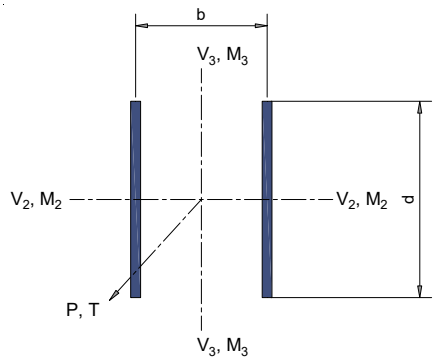

$b := 4 \cdot in + \frac{5}{16} in = 4.313 \cdot in$ Weld width.

$d := 3 \cdot in$ Weld length.

$w_{act} := \frac{1}{8} \cdot in$ Weld size.

8.5.4.2 - MATERIAL PROPERTIES

$F_{EXX} = 70 \cdot ksi$ Ultimate stress of the weld metal.

8.5.4.3 - WELD CAPACITIES

Inputs from AISC 2010, Table J2.5:

$\Omega := 2.0$ The safety factor for welds.

$R_n := 0.6 \cdot F_{EXX}$ $R_n = 42 \cdot ksi$ Weld design strength.

8.5.4.4 - APPLIED LOADS, SHEARS AND MOMENTS

Table 8.5.4.4-1 - Maximum Guide and V-Stop Reaction Loads

Support Type	Line Size (in)	Lateral Horizontal Force (lbf) P_H	Vertical (downward) Force (lbf) P_V
V-Stop	3	N/A	-127

(RPP-CALC-62528, Table 7-2, *Bounding Carrier Support Reaction Loads*, page 28)

Connection forces and moments.

NOTE: Loads will be rounded up for conservatism.

$P := |P_{V_stop}| = 200\,lbf$ $V_2 := 0 \cdot lbf$ $V_3 := 0 \cdot lbf$ $T := 0 \cdot lbf$ $M_2 := 0 \cdot in \cdot lbf$ $M_3 := 0 \cdot in \cdot lbf$

8.5.4.5 - WELD PROPERTIES

Weld Properties Per Blodgett 1991, Table 5, Page 7.4-7.

$C_2 := \frac{b}{2}$ $\quad C_2 = 2.156 \cdot in$ — The distance from the neutral axis to the outer fiber along the 2-2 axis.

$C_3 := \frac{d}{2}$ $\quad C_3 = 1.5 \cdot in$ — The distance from the neutral axis to the outer fiber along the 3-3 axis.

$A_w := 2 \cdot d$ $\quad A_w = 6 \cdot in$ — The linear area of the weld.

$A_{w2} := 2 \cdot d$ $\quad A_{w2} = 6 \cdot in$ — The linear shear area of the weld along the 2-2 axis.

$A_{w3} := \frac{4}{3} \cdot d$ $\quad A_{w3} = 4 \cdot in$ — The linear shear area of the weld along the 3-3 axis.

$S_{w2} := \frac{d^2}{3}$ $\quad S_{w2} = 3 \cdot in^2$ — The linear section modulus about the 2-2 axis.

$S_{w3} := b \cdot d$ $\quad S_{w3} = 12.937 \cdot in^2$ — The linear section modulus about the 3-3 axis.

$J_w := \frac{d \cdot \left(3 \cdot b^2 + d^2\right)}{6}$ $\quad J_w = 32.396 \cdot in^3$ — The linear polar moment of inertia.

8.5.4.6 - STRUCTURAL EVALUATION

$$A_{lin} := \sqrt{\left(\frac{P}{A_w} + \frac{M_2}{S_{w2}} + \frac{M_3}{S_{w3}}\right)^2 + \left(\frac{V_2}{A_{w2}} + \frac{T \cdot C_3}{J_w}\right)^2 + \left(\frac{V_3}{A_{w3}} + \frac{T \cdot C_2}{J_w}\right)^2} \quad A_{lin} = 33.333 \cdot \frac{lbf}{in}$$

Linear weld stress.

$$R_u := \frac{A_{lin}}{0.707 w_{act}} \quad R_u = 0.4 \cdot ksi$$

Actual stress in the weld.

$$DCR_{support} := \frac{\Omega \cdot R_u}{R_n} = 0.018$$

The demand/capacity ratio is < 1; therefore, OK.

$$PIPE_SUPPORT_WELD_IS := if\left(DCR_{support} \le 1, \text{"ADEQUATE"}, \text{"NOT_ADEQUATE"}\right) = \text{"ADEQUATE"}$$