RPP-CALC-62547
Revision 0

Structural Analysis of TSCR IXC Storage Pad

Prepared by

JR Martin
Atkins Energy Federal EPC, Inc. (by Sargent & Lundy) for
Washington River Protection Solutions, LLC

Date Published
September 2019

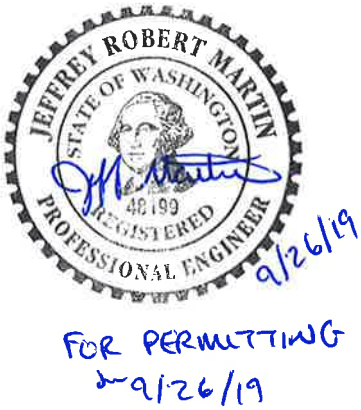

Prepared for the U.S. Department of Energy
Office of River Protection

Contract No. DE-AC27-08RV14800

RPP-CALC-62547, Rev. 0

Sargent & Lundy Engineering Services, Inc.	**CALCULATION COVER SHEET**	Page No. 1 of 68	
		Date 9-16-2019	Rev. No. 0
		Calculation No: 078908.18.01-S-001	

Project No.	Project Title:	Client:
S78918.001	TSCR IXC Storage Pad System Design	Atkins Energy Federal, EPC

Title:
Structural Analysis of TSCR IXC Storage Pad

Purpose and Objective:
The purpose of this calculation is to perform detailed design of the Tank Side Cesium Removal Ion Exchange Column Storage Pad and haul path using loading conditions per TFC-ENG-STD-06, *Design Loads for Tank Farm Facilities*, and operational loads for long-term storage of the Ion Exchange Columns.

Rev. No.	Total Pages		Prepared By	Checked By	PM/TL
0	68	Print Name/ Sign:	JR Martin, P.E. RL Drake, P.E. Appendix A	CM Conselman, P.E. PP Santos, P.E. Appendix A	MA White
		Date:	9-16-2019	9-16-2019	9/20/19

Revision Description (Revision Description/Affected Pages):
Original issue.

		Print Name/ Sign:			
		Date:			

Revision Description (Revision Description/Affected Pages):

RPP-CALC-62547, Rev. 0

CALCULATION REVIEW CHECKLIST

Project No.	Calculation No.	Rev. No.	Page No.
S78918.001	078908.18.01-S-001	0	2 of 68

Items Checked	Accept Y	Accept N	Accept N/A	Description of Resolution for Unacceptable Items
1. Cover sheets properly completed.	√			
2. Calculation sheet headers complete with calculation number, revision number, etc.	√			
3. Calculation sheet contents are legible, accurate, and complete per format.	√			
4. Listed attachments included.	√			
5. Calculation objective clearly described.	√			
6. Criteria are suitable and properly referenced to task specific documents.	√			
7. Assumptions and input data, selected, described, reasonable, and attached or referenced to task documents.	√			
8. Calculation method identified and appropriate for the design activity.	√			
9. Calculation results reasonable and correctly described in results and conclusions.	√			
10. Physical property calculations generated by CAD software verified via hand calculations.			√	
11. Computer program identified with version and revision.			√	
12. Computer input/output provided or referenced and reasonable.			√	
13. Computer run traceable to calculation (file #, etc.).			√	
14. Computer input/output data and problem type within validation/verification range of use.			√	
15. Computer program validation/verification addressed.			√	
16. Computer operating system in use for calculation preparation is the same as when the software was verified on machine.			√	

Calculation Checking Method	√	Applicable Pages
1. Direct Step-by-Step Check	√	All
2. Reference Chart(s) or Book(s) Comparison (Append Documentation)		
3. Alternate Calculation (Append Documentation)		

Comments:

Preparer (Print Name and Sign):		Date:
JR Martin, P.E. (Pages 1-41 and 53-73)	RL Drake, P.E. (Appendix A)	9-16-2019
Checker (Print Name and Sign):		**Date:**
CM Conselman, P.E. (Pages 1-41 and 53-73)	PP Santos, P.E. (Appendix A)	9-16-2019

Signatures obtained only after discrepancies are corrected and comments are resolved.

CALCULATION SHEET

Project No. S78918.001	Calculation No. 078908.18.01-S-001	Rev. 0	Page No. 3 of 68
Title: Structural Analysis of TSCR IXC Storage Pad			
Prepared By: JR Martin	Date: 9-16-2019	Checked By: CM Conselman	Date: 9-16-2019

TABLE OF CONTENTS

1.0 PURPOSE 6
2.0 METHODOLOGY 6
3.0 DESIGN INPUTS 6
4.0 ASSUMPTIONS 7
5.0 COMPUTER SOFTWARE 7
6.0 RESULTS 7
7.0 REFERENCES 7
8.0 CALCULATIONS 10

CALCULATION SHEET

Project No. S78918.001	Calculation No. 078908.18.01-S-001	Rev. 0	Page No. 4 of 68
Title: Structural Analysis of TSCR IXC Storage Pad			
Prepared By: JR Martin	Date: 9-16-2019	Checked By: CM Conselman	Date: 9-16-2019

Appendix and Attachments

Appendix A
Structural Analysis of TSCR IXC Storage Pad – FEA

Attachment 1
Kalmar Forklift Data – DCG160-12T

Attachment 2
General Arrangement of the IXC – Drawing No. 1813-3010

Attachment 3
Nelson Weld Stud Data

Attachment 4
Spectral Accelerations email – Waiver 271

CALCULATION SHEET

Project No. S78918.001	Calculation No. 078908.18.01-S-001	Rev. 0	Page No. 5 of 68
Title: Structural Analysis of TSCR IXC Storage Pad			
Prepared By: JR Martin	Date: 9-16-2019	Checked By: CM Conselman	Date: 9-16-2019

Acronyms

ACI	American Concrete Institute
AISC	American Institute for Steel Construction
ALA	American Lifelines Alliance
ASCE	American Society of Civil Engineers
DCR	Demand-to-Capacity Ratio
EPRI	Electric Power Research Institute
FEA	Finite Element Analysis
IBC	International Building Code
IXC	Ion Exchange Column
LRFD	Load Resistance Factor Design
NDC	Natural Phenomena Design Category
SDC	Seismic Design Criteria
SSC	Systems, Structures, and Components
TSCR	Tank Side Cesium Removal
WDC	Wind Design Criteria
ZPA	Zero Period Acceleration

CALCULATION SHEET

Project No. S78918.001	Calculation No. 078908.18.01-S-001	Rev. 0	Page No. 6 of 68
Title: Structural Analysis of TSCR IXC Storage Pad			
Prepared By: JR Martin	Date: 9-16-2019	Checked By: CM Conselman	Date: 9-16-2019

1.0 PURPOSE

The purpose of this calculation is to perform detailed design of the Tank Side Cesium Removal (TSCR) Ion Exchange Column (IXC) Storage Pad and haul path using loading conditions per TFC-ENG-STD-06, *Design Loads for Tank Farm Facilities*, and operational loads for long-term storage of the IXCs.

2.0 METHODOLOGY

Per RPP-SPEC-62054, Rev. 2, the TSCR IXC Concrete Storage Pad System is Natural Phenomena Design Category (NDC) NDC-1. The loads on the structure are determined in accordance with TFC-ENG-STD-06. Per TFC-ENG-STD-06, load combinations, allowable stresses, deformation, and strength requirements for NDC-1 structures, systems, and components (SSCs) shall comply with the American Concrete Institute (ACI) standard, ACI 318-14. Seismic loading on the pad is determined in accordance with ACI 318-14 and TFC-ENG-STD-06 for SDC-1, Limit State A. The seismic loading for the IXC anchor plate has been determined by others (RPP-CALC-62458, *TSCR Weight and COG Calculation*).

The worst case loading scenario for the pad is with all 160 IXCs plus a forklift on it (see H-14-111605).

Accidental drop scenario is not required for this general service evaluation.

There are no significant temperature or radiation effects on the concrete from the IXCs which would require derating of the concrete strength or use of special materials (additives, special aggregates) in the concrete.

3.0 DESIGN INPUTS

1. Soil properties are per RPP-RPT-61401, *Low-Activity Waste Pretreatment System South and East of AP Tank Farm Geotechnical Engineering Report*. Based upon this report, and the absence of saturated clay soil, liquefaction is not a concern. This evaluation will utilize the worst case soil properties (for dune sand) for the design of the TSCR IXC storage pad.
   A. Allowable Soil Bearing Pressure = 1,500 psf. This value is consistent with RPP-RPT-61401, Figure 7-1.
   B. Coefficient of friction = 0.55 (per RPP-RPT-61401, Section 7.2.2)
   C. Lateral soil bearing pressure = 150 psf/ft for Class 4 material (sand) per IBC 2015, Table 1806.2. RPP-RPT-61401, Section 7.2.2, shows a value of 390 psf for soil below 2-ft depth.
   D. Modulus of subgrade reaction = 250 pcf based upon typical Hanford area values and AASHTO 1993, pg II-81, Section 4.2.2.
2. The operating weight of the IXC is 26,763 lbs. (H-14-111250, Sh. 1, Attachment 2)
3. The dimensions of the IXC are 34 in. in diameter x 121.25-in. tall. (H-14-111250, Sh. 1, Attachment 2)
4. The concrete strength (28-day compressive) is 4,500 psi and the reinforcing steel is ASTM A615 Gr. 60, fy = 60 ksi per H-14-111603, *TSCR IXC Storage Area Civil General Notes and Legend*, August 2019, and RPP-SPEC-62663, *Construction Specification For: TSCR Upgrades, Waste Feed Delivery & TSCR IXC Storage Pad*.

5. The forklift used for the design is the Kalmar®[1] DCG160-12T model with a lifting capacity of 16,000 kg (35,274 lb).
6. The forklift tire pressure is approximately 1MPa per Kalmar Catalog.
7. The storage pad is general service per RPP-SPEC-62054.
8. The shear and moment loads per IXC anchoring plates are 42,889 lbf and 1,998,079 in*lbf. (RPP-CALC-62458, Section 7.1.4). This considers the application of Load Resistance Factor Design (LRFD) load factors of 1.0 for wind and seismic per ASCE 7-10, Section 2.3.

4.0 ASSUMPTIONS

There are no unverified assumptions in the calculation.

5.0 COMPUTER SOFTWARE

No unverified computer software was used in this analysis. Mathcad®[3], Release 14.0, was used for the hand calculations and was checked using a handheld calculator.

ANSYS® was used in Appendix A and is described therein.

6.0 RESULTS

The TSCR IXC Storage Pad options as detailed in drawings H-14-111603, *TSCR IXC Storage Area Civil General Notes & Legend*; H-14-111605, *TSCR IXC Storage Area Civil Grading Plan*; H-14-111606, *TSCR IXC Storage Area Civil Enlarged Plan*; H-14-111608, *TSCR IXC Storage Area Civil Security Fence & Pad Dets*; and H-14-111609, *TSCR IXC Storage Area Civil Sections & Details*, are adequate for the given loading conditions. See Section 8.0, Calculations, for complete results.

7.0 REFERENCES

AASHTO 1993, *AASHTO Guide for Design of Pavement Structures*, American Association of State Highway and Transport Officials.

ACI 318-14, 2014, *Building Code Requirements for Structural Concrete and Commentary*, American Concrete Institute, Farmington Hills, MI.

AISC 360-10, 2011, *Specification for Structural Steel Buildings*, 14th Edition, American Institute of Steel Construction, Chicago, IL.

ASCE 7-10, 2010, *Minimum Design Loads for Buildings and Other Structures*, American Society of Civil Engineers, Reston, VA.

Avallone, Eugene A. and Baumeister, Theodore, *Marks' Standard Handbook for Mechanical Engineers*, 10th Edition, 1996, McGraw-Hill, Inc., NY.

[1] Kalmar is a registered trademark of Cargotec Corporation, Helsinki, Finland.
[3] Mathcad is a registered trademark of PTC Inc., Needham, Massachusetts.

Email, Bruce Carpenter to Jeff Martin, "Updated Design Response Spectra per Waiver 271," dated 5/30/2019. (**Provided in Attachment 4**)

H-14-111250, Sh. 1, *General Arrangement IXC-150*, Rev. 2, Avantech Inc., Richland, WA. **(Provided in Attachment 2.)**

H-14-111293, Sheet 1, *TSCR Anchoring Base for Storage Pad*, Rev. 0, U.S. Department of Energy, Office of River Protection, Richland, WA.

H-14-111603, Sheet 1, 2019, *TSCR IXC Storage Area Civil General Notes and Legend*, Rev. 0, U.S. Department of Energy, Office of River Protection, Richland, WA.

H-14-111605, Sheet 1, *TSCR IXC Storage Area Civil Grading Plan*, Rev. 0, U.S. Department of Energy, Office of River Protection, Richland, WA.

H-14-111606, Sheet 1, *TSCR IXC Storage Area Civil Enlarged Plan*, Rev. 0, U.S. Department of Energy, Office of River Protection, Richland, WA.

H-14-111608, Sheet 1, *TSCR IXC Storage Area Civil Security Fence & Pad Dets*, Rev. 0, U.S. Department of Energy, Office of River Protection, Richland, WA.

H-14-111609, Sheet 1, *TSCR IXC Storage Area Civil Sections & Details* , Rev. 0, U.S. Department of Energy, Office of River Protection, Richland, WA.

Kalmar Medium Forklifts DCG90-180, Catalog SB-LTG18-EN-WW, January 18, 2017, Cargotec Sweden AB. **(Catalog page provided in Attachment 1.)**

IBC, 2015, *International Building Code*, International Code Council, Country Club Hills, IL.

Lindeburg, Michael R., *Civil Engineering Reference Manual*, 11th Edition, Professional Publications, Inc., Belmont, CA, 2008.

Nelson Stud Welding, In Stock Studs & Standards, 2017, Nelson Stud Welding, Elyria, OH. **(Provided in Attachment 3.)**

Nilson, A. H., Darwin, D., Dolan, C. W., *Design of Concrete Structures*, 13th Edition, 2004, McGraw-Hill, New York, NY.

PCA Engineering Bulletin, 2008, *Concrete Floors on Ground*, Portland Cement Association.

PCI, *PCI Design Handbook, Precast and Prestressed Concrete*, 6th Edition, 2004, Precast/Prestressed Concrete Institute, Chicago, IL.

RPP-CALC-62458, *TSCR Anchoring Base for Storage Pad – Seismic Calculation*, Rev 0, U.S. Department of Energy, Office of River Protection, Richland, WA.

RPP-CALC-62572, *IXC-150 Drop Analysis*, Rev 0, U.S. Department of Energy, Office of River Protection, Richland, WA.

RPP-RPT-61401 (65668-000-SUB-005-001), 2019, *Low-Activity Waste Pretreatment System South and East of AP Tank Farm Geotechnical Engineering Report*, Rev. 0, Washington River Protection Solutions, LLC, Richland, WA.

RPP-SPEC-62054, 2019, *TSCR IXC Concrete Storage Pad System: Tank Farm System Infrastructure Updates Specification*, Rev. 2, Washington River Protection Solutions, LLC, Richland, WA.

RPP-SPEC-62663, 2019, *Construction Specification For: TSCR Upgrades, Waste Feed Delivery & TSCR IXC Storage Pad*, Rev. 0, Washington River Protection Solutions, LLC, Richland, WA.

TFC-ENG-STD-06, *Design Loads for Tank Farm Facilities*, Rev. D-1, Washington River Protection Solutions, LLC, Richland, WA.

TM 5-809-1, August 1987, *Concrete Floor Slabs on Grade Subjected to Heavy Loads*, Headquarters Departments of the Army and the Air Force, Washington D.C.

VV-18-02-067, 2018, *Software Verification and Validation Sheet, for ANSYS 18.2*, Sargent & Lundy, Richland, WA.

8.0 CALCULATIONS

8.1 Material Properties and Dimensions

$pad_{thk} := 12 \cdot in$ — Thickness of IXC storage pad. (H-14-111608, Sh 1)

$\rho_{conc} := 150pcf$ — Density of concrete. (AISC 14th Ed., Table 17-12)

$f_y := 60 \cdot ksi$ — Yield strength of rebar. (See Design Inputs)

$f_c := 4500 \cdot psi$ — Concrete compressive strength. (See Design Inputs)

$E_c := 57000 \cdot \sqrt{\frac{f_c}{psi}} \cdot (psi) = 3824 \cdot ksi$ — Concrete modulus of elasticity. (ACI 318-14, Section 19.2.2.1)

$\nu_{concrete} := 0.15$ — Poisson's ratio for concrete. (*Mark's Handbook for Mechanical Engineers*, pg 5-15)

$E_s := 29 \cdot 10^6 \cdot psi$ — Rebar modulus of elasticity, ACI 318-14, Section 20.2.2.2.

$concrete_cover := 3 \cdot in$ — Concrete cover at bottom of slab. (H-14-111608, Sh 1)

$IXC_{height} := 121.25 \cdot in = 10.10\,ft$ — Height of IXC. (See Design Inputs)

$IXC_{dia} := 34in = 2.83\,ft$ — Diameter of IXC. (See Design Inputs)

$IXC_{weight} := 26763lb$ — Operating weight of the IXC. (See Design Inputs)

$wt_{flift} := (22400 + 16000)kg = 84658\,lb$ — Operating weight of the forklift. (See Attachment 1)

$p_{tire} := 1MPa = 145.0\,psi$ — Forklift tire pressure (maximum). (See Design Inputs)

$axle_load_{front} := 11900kg = 26235\,lb$ — Front axle load of forklift (unloaded is worst case). (See Attachment 1)

$axle_load_{rear} := 35800kg = 78925\,lb$ — Rear axle load of forklift (loaded is worst case). (See Attachment 1)

$n_{IXC} := 160$ — Number of IXCs on the storage pad. (See Methodology)

$L_{pad} := 102ft + 8in \quad B_{pad} := 80ft + 8in - 25ft = 55.7\,ft$ — Length and width of TSCR IXC Storage Pad. (H-14-111606, Sh 1)

8.2 Determine Loads on the Concrete Pad

This section determines the loads on the TSCR IXC storage pad.

Dead Load

The TSCR IXC storage pad self-weight is the only dead load.

Live Load

The live loads consist of the IXCs and the forklift (loads previously defined).

Snow and Ash Load

SNOW LOAD

$p_g := 15psf$ — Ground snow load. (TFC-ENG-STD-06, Table 3)

$I_s := 1.0$ — Importance factor. (TFC-ENG-STD-06, Table 3) Conservatively using PDC-1 criteria.

$C_e := 1.0$ — Exposure factor. (ASCE 7-10, Table 7-2)

$C_t := 1.2$ — Thermal factor. Utilize unheated value. (ASCE 7-10, Table 7-3)

$p_f := 0.7 \cdot C_e \cdot C_t \cdot I_s \cdot p_g = 12.6 \cdot psf$ — Flat roof snow load. (ASCE 7-10, Section 7.3)

ASH LOAD

$p_a := 3.2 \cdot psf$ — Ashfall loading. (TFC-ENG-STD-06, 3.5.6) Conservatively using VDC-1 criteria.

$F_{SA} := \max(p_f, p_a) = 12.6 \cdot psf$ — Worst case snow/ash load.

Seismic Load on the Structure (ASCE 7-10)

$S_{DS} := 0.2858g$ — Design spectral horizontal acceleration parameter at short periods. (ASCE 7-10, Figure 11.4-1 and Email - Carpenter to Martin)

$I_e := 1.0$ — Importance factor for SDC-1 seismic. (TFC-ENG-STD-06, Section 3.5.5.1)

$z_h := 0$ — Ratio of the height in structure of point of attachment of component to the average roof height of structure. The attachment is located at the foundation at grade.

$a_p := 1.0$ — Component amplification factor for other mechanical components. (ASCE 7-10, Table 13.6-1)

$R_p := 1.5$ — Component response modification factor for other mechanical components. (ASCE 7-10, Table 13.6-1)

$$F_{pnom} := \frac{0.4 \cdot a_p \cdot S_{DS}}{\frac{R_p}{I_e}}[1 + 2(z_h)] = 0.08 \cdot g$$

Horizontal seismic force. (ASCE 7-10, eq 13.3-1)

$F_{pmax} := 1.6 S_{DS} \cdot I_e = 0.46 \cdot g$ — Maximum lateral seismic acceleration. (ASCE 7-10, eq 13.3-2)

$F_{pmin} := 0.3 S_{DS} \cdot I_e = 0.09 \cdot g$ — Minimum lateral seismic acceleration. (ASCE 7-10, eq 13.3-3)

$$F_p := \begin{cases} F_{pmin} & \text{if } F_{pnom} < F_{pmin} \\ F_{pmax} & \text{if } F_{pnom} > F_{pmax} \\ F_{pnom} & \text{otherwise} \end{cases} = 0.09 \cdot g$$

Minimum lateral acceleration to use for design purposes.

$F_v := 0.2 S_{DS} \cdot I_e = 0.06 \cdot g$ — Design vertical seismic acceleration. (ASCE 7-10, eq 12.4-4)

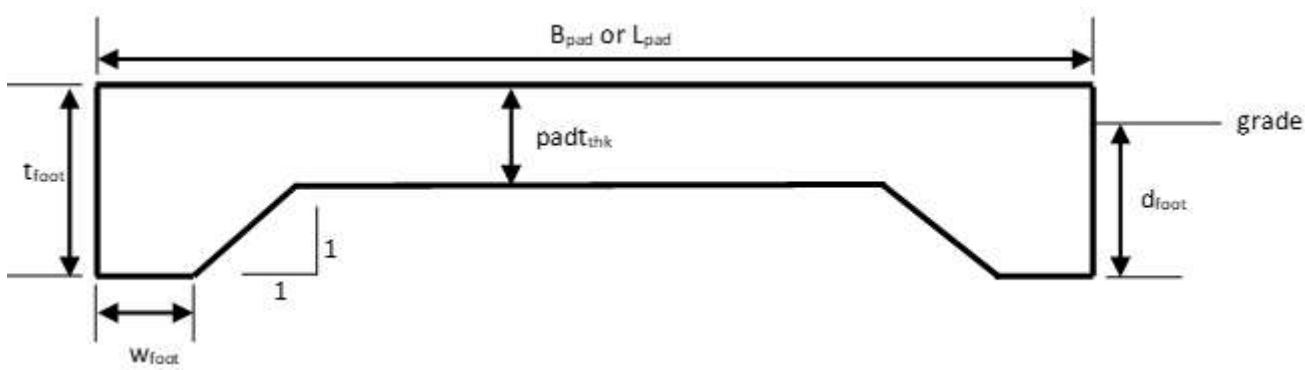

Figure 8-1: TSCR IXC Storage Pad Illustration
No Scale

$w_{foot} := 12in$ — Width of the pad footing. (See Design Inputs)

$t_{foot} := 2.5ft$ — Approximate nominal thickness of the pad footing. (H-14-111608, Sh 1)

$d_{foot} := t_{foot} - 6in = 24.0 \cdot in$ — Depth below grade of the pad footing. (H-14-111608, Sh 1)

$$V_{pad} := pad_{thk} \cdot B_{pad} \cdot L_{pad} + \left(t_{foot} - pad_{thk}\right) \cdot w_{foot} \cdot \left[2 \cdot B_{pad} + 2 \cdot \left(L_{pad} - 2 \cdot w_{foot}\right)\right] \ldots = 242.1 \cdot yd^3$$
$$+ \frac{\left(t_{foot} - pad_{thk}\right) \cdot \left(t_{foot} - pad_{thk}\right) \cdot \left[2 \cdot B_{pad} + 2 \cdot \left(L_{pad} - 2 \cdot w_{foot}\right)\right]}{2}$$

Volume of the pad.

$Wt_{pad} := V_{pad} \cdot \rho_{conc} = 980 \cdot kip$ — Approximate pad weight.

$F_{p_pad} := F_p \cdot \frac{Wt_{pad}}{g} = 84 \cdot kip$ — Design horizontal seismic force for the pad.

$F_{p_IXC} := F_p \cdot n_{IXC} \cdot IXC_{weight} = 367 \cdot kip$ — Design horizontal seismic force for the IXCs.

$F_{v_IXC} := F_v \cdot n_{IXC} \cdot IXC_{weight} = 245 \cdot kip$ — Design vertical seismic force for the IXCs.

Wind Load (ASCE 7 Chapter 29)

$V := 110mph$ — Basic Straight Wind Design Speed. (TFC-ENG-STD-06, Table 4)

$I_w := 1.0$ — Importance factor. (TFC-ENG-STD-06, Table 4)

$K_{zt} := 1.0$ — Topographic factor. (ASCE 7-10, Section 26.8.2)

$K_d := 0.95$ — Directionality factor. (ASCE 7-10, Table 26.6-1)

$K_z := 0.85$ — Velocity pressure exposure coefficient. (ASCE 7-10, Table 29.3-1, Exposure Category C per TFC-ENG-STD-06)

$G := 0.85$ — Gust effect factor. (ASCE 7-10, Section 26.9)

$GC_{pi} := 0.18 \quad (+/-)$ — Internal pressure coefficient. (ASCE 7-10, Table 26.11-1)

$q_z := 0.00256 \cdot K_z \cdot K_{zt} \cdot K_d \cdot \left(\frac{V}{mph}\right)^2 \cdot I_w \cdot psf = 25.0 \cdot psf$ — Velocity pressure. (ASCE 7-10, Equation 29.3-1)

$p_x := \frac{IXC_{dia}}{ft} \cdot \sqrt{\frac{q_z}{psi}} = 1.18$ — Cross-section parameter. (ASCE 7-10, Figure 29.5-1)

$h_d := \frac{IXC_{height}}{IXC_{dia}} = 3.57$ — Height to diameter ratio.

$interp_1 := \begin{pmatrix} 1 \\ 7 \end{pmatrix} \qquad interp_2 := \begin{pmatrix} 0.7 \\ 0.8 \end{pmatrix}$ — Interpolation values from ASCE 7-10, Figure 29.5-1.

$C_f := linterp(interp_1, interp_2, h_d) = 0.74$ — Force coefficient interpolated from ASCE 7-10, Figure 29.5-1.

$A_f := IXC_{dia} \cdot IXC_{height} = 28.6 \cdot ft^2$ — Projected area normal to the wind except where C_f is specified for the actual surface area. (ASCE 7-10, Section 29.5)

$F_w := q_z \cdot G \cdot C_f \cdot A_f = 452.1\,lbf$ — Wind design pressure. (ASCE 7-10, eq 29.5-1)

The wind loading is minimal compared to the seismic loading (even considering the wind applied to a full row or column of IXCs). Therefore, wind will not be evaluated further.

8.3 Evaluate Soil Loading

Load Combinations

TFC-ENG-STD-06, Section 3.5.12 directs the use of IBC, Section 1605 for load combinations. This evaluation will use Allowable Stress Design for the bearing pressure and sliding evaluations and Strength Design for the concrete evaluations.

1605.3.1 Basic load combinations. Where *allowable stress design* (working stress design), as permitted by this code, is used, structures and portions thereof shall resist the most critical effects resulting from the following combinations of loads:

$D + F$ **(Equation 16-8)**

$D + H + F + L$ **(Equation 16-9)**

$D + H + F + (L_r \text{ or } S \text{ or } R)$ **(Equation 16-10)**

$D + H + F + 0.75(L) + 0.75(L_r \text{ or } S \text{ or } R)$ **(Equation 16-11)**

$D + H + F + (0.6W \text{ or } 0.7E)$ **(Equation 16-12)**

$D + H + F + 0.75(0.6W) + 0.75L + 0.75(L_r \text{ or } S \text{ or } R)$ **(Equation 16-13)**

$D + H + F + 0.75\,(0.7\,E) + 0.75\,L + 0.75\,S$ **(Equation 16-14)**

$0.6D + 0.6W + H$ **(Equation 16-15)**

$0.6(D + F) + 0.7E + H$ **(Equation 16-16)**

Dead (D), Live (L), Seismic (E), and Snow (S) load combinations.

$$D_{comb_asd} := \begin{pmatrix} 1 \\ 1 \\ 1 \\ 1 \\ 0.6 \end{pmatrix} \quad L_{comb_asd} := \begin{pmatrix} 1 \\ 0.75 \\ 0 \\ 0.75 \\ 0 \end{pmatrix} \quad E_{comb_asd} := \begin{pmatrix} 0 \\ 0 \\ 0.7 \\ 0.75 \cdot 0.7 \\ 0.7 \end{pmatrix} \quad S_{comb_asd} := \begin{pmatrix} 0 \\ 0.75 \\ 0 \\ 0.75 \\ 0 \end{pmatrix} \begin{matrix} \text{eq 16-9} \\ \text{eq 16-11} \\ \text{eq 16-12} \\ \text{eq 16-13} \\ \text{eq 16-16} \end{matrix}$$

Apply moment and vertical load as approximately centered on the pad.

Note that the bearing pressure evaluation applies the IXC loads as a live load which is worst case over applying the vertical seismic.

Soil Bearing Pressure

$$P := D_{comb_asd} \cdot Wt_{pad} + L_{comb_asd} \cdot \left(IXC_{weight} \cdot g \cdot n_{IXC} + wt_{flift} \cdot g\right) \ldots + S_{comb_asd} \cdot F_{SA} \cdot B_{pad} \cdot L_{pad} = \begin{pmatrix} 5347 \\ 4309 \\ 980 \\ 4309 \\ 588 \end{pmatrix} \cdot kip$$

Total vertical load acting on pad.

$$M_B := E_{comb_asd} \cdot \left[F_{p_pad} \cdot \frac{pad_{thk}}{2} + F_{p_IXC} \cdot \left(\frac{IXC_{height}}{2} + pad_{thk}\right)\right] = \begin{pmatrix} 0.00 \\ 0.00 \\ 1584.82 \\ 1188.61 \\ 1584.82 \end{pmatrix} \cdot ft \cdot kip$$

Moment acting on pad due to seismic loading on the IXCs and pad. Note that applying the moment of the IXCs (pinned connection to pad) is conservative.

$$\varepsilon_B := \frac{M_B}{P} = \begin{pmatrix} 0.0 \\ 0.0 \\ 19.4 \\ 3.3 \\ 32.3 \end{pmatrix} \cdot in$$

Eccentricity of the pad loading. (Lindeburg, eq 36.20)

$$B := B_{pad} = 55.7\ ft$$

Pad width.

$$\frac{B}{6} = 111.3 \cdot in$$

The value B/6 is greater than ε_B for all cases. A reduction in footing contact area need not be applied. (Lindeburg, pg 36-8 and *Design of Concrete Structures*, pg 548)

$$m_f := \frac{B}{2} - \varepsilon_B = \begin{pmatrix} 334.0 \\ 334.0 \\ 314.6 \\ 330.7 \\ 301.7 \end{pmatrix} \cdot in$$

Distance from the pivot point of the footing to the maximum magnitude of the soil pressure. (See *Design of Concrete Structures*, pg 548)

$$p_{max} := \begin{bmatrix} \begin{cases} \dfrac{P_1}{B \cdot L_{pad}} \cdot \left(1 + \dfrac{6 \cdot \varepsilon_{B_1}}{B}\right) & \text{if } \varepsilon_{B_1} \le \dfrac{B}{6} \\ \dfrac{2 \cdot P_1}{3 \cdot B \cdot L_{pad}} & \text{otherwise} \end{cases} \\ \begin{cases} \dfrac{P_2}{B \cdot L_{pad}} \cdot \left(1 + \dfrac{6 \cdot \varepsilon_{B_2}}{B}\right) & \text{if } \varepsilon_{B_2} \le \dfrac{B}{6} \\ \dfrac{2 \cdot P_2}{3 \cdot B \cdot L_{pad}} & \text{otherwise} \end{cases} \\ \begin{cases} \dfrac{P_3}{B \cdot L_{pad}} \cdot \left(1 + \dfrac{6 \cdot \varepsilon_{B_3}}{B}\right) & \text{if } \varepsilon_{B_3} \le \dfrac{B}{6} \\ \dfrac{2 \cdot P_3}{3 \cdot B \cdot L_{pad}} & \text{otherwise} \end{cases} \\ \begin{cases} \dfrac{P_4}{B \cdot L_{pad}} \cdot \left(1 + \dfrac{6 \cdot \varepsilon_{B_4}}{B}\right) & \text{if } \varepsilon_{B_4} \le \dfrac{B}{6} \\ \dfrac{2 \cdot P_4}{3 \cdot B \cdot L_{pad}} & \text{otherwise} \end{cases} \end{bmatrix} = \begin{pmatrix} 936 \\ 754 \\ 201 \\ 776 \end{pmatrix} \cdot psf$$

Maximum soil bearing pressure. (*Design of Concrete Structures*, pg. 548)

$p_{allow} := 1500 \cdot psf$

Allowable bearing pressure on the soil. (See Design Inputs)

$$DCR_{soil} := \frac{p_{max}}{p_{allow}} = \begin{pmatrix} 0.62 \\ 0.50 \\ 0.13 \\ 0.52 \end{pmatrix}$$

$DCR_{soil} := \max(DCR_{soil}) = 0.62$

DCR is less than 1.0; therefore, **OK**.

Sliding Resistance

The horizontal seismic of the IXCs is included as well as the IXC weights.

$\mu_{soil} := 0.55 \qquad lat_{soil_shallow} := 150\,\frac{psf}{ft} \qquad lat_{soil} := 390\,\frac{psf}{ft}$

Coefficient of friction and lateral bearing pressure for soil. (See Design Inputs)

$$Fric_{pad} := \left(P + IXC_{weight} \cdot g \cdot n_{IXC} - E_{comb_asd} \cdot F_{v_IXC}\right) \cdot \mu_{soil} = \begin{pmatrix} 5296 \\ 4725 \\ 2800 \\ 4655 \\ 2584 \end{pmatrix} \cdot kip$$

Frictional sliding resistance of the pad.

$$Lat_{load} := E_{comb_asd} \cdot F_{p_IXC} = \begin{pmatrix} 0 \\ 0 \\ 257 \\ 193 \\ 257 \end{pmatrix} \cdot kip$$

Lateral load acting on pad due to seismic loading on the pad and IXCs. Note that the pad weight is not included in the sliding evaluation. This is common practice for evaluation of structures/foundations.

$$\begin{aligned} Lat_{pad} := {} & \left(d_{foot} - pad_{thk}\right) \cdot \min\left(B_{pad}, L_{pad}\right) \cdot \left[\frac{2}{3} \cdot \left(d_{foot} - pad_{thk}\right)\right] \cdot lat_{soil} \ldots = 37 \cdot kip \\ & + \left(d_{foot} - 2ft\right) \cdot \min\left(B_{pad}, L_{pad}\right) \cdot \left(\frac{2}{3} \cdot d_{foot}\right) \cdot lat_{soil} \ldots \\ & + 2ft \cdot \min\left(B_{pad}, L_{pad}\right) \cdot \left[\frac{2}{3} \cdot (2ft)\right] \cdot lat_{soil_shallow} \end{aligned}$$

Lateral soil sliding resistance.

$$Lat_{resist} := Fric_{pad} + Lat_{pad} = \begin{pmatrix} 5333 \\ 4762 \\ 2837 \\ 4691 \\ 2621 \end{pmatrix} \cdot kip$$

Resistance to sliding.

$$DCR_{slide} := \frac{Lat_{load}}{Lat_{resist}} = \begin{pmatrix} 0.00 \\ 0.00 \\ 0.09 \\ 0.04 \\ 0.10 \end{pmatrix}$$

$DCR_{slide} := \max\left(DCR_{slide}\right) = 0.10$

Worst case DCR is less than 1.0; therefore, **OK**.

8.4 Evaluate Pad Strength

Pad strength will be evaluated using ACI 318.

Load Combinations

Load combinations are taken from IBC, Section 1605.

1605.2 Load combinations using strength design or load and resistance factor design. Where strength design or load and resistance factor design is used, buildings and other structures, and portions thereof, shall be designed to resist the most critical effects resulting from the following combinations of factored loads:

$1.4(D+F)$ **(Equation 16-1)**

$1.2(D+F)+1.6(L+H)+0.5(L_r \text{ or } S \text{ or } R)$ **(Equation 16-2)**

$1.2(D+F)+1.6(L_r \text{ or } S \text{ or } R)+1.6H+(f_1L \text{ or } 0.5W)$ **(Equation 16-3)**

$1.2(D+F)+1.0W+f_1L+1.6H+0.5(L_r \text{ or } S \text{ or } R)$ **(Equation 16-4)**

$1.2(D+F)+1.0E+f_1L+1.6H+f_2S$ **(Equation 16-5)**

$0.9D+1.0W+1.6H$ **(Equation 16-6)**

$0.9(D+F)+1.0E+1.6H$ **(Equation 16-7)**

Dead (D), Live (L), Seismic (E), and Snow (S) load combinations for IBC, Section 1605. Note that equations which have been omitted are not worst case by comparison.

$$D_{comb} := \begin{pmatrix} 1.4 \\ 1.2 \\ 1.2 \\ 1.2 \\ 0.9 \end{pmatrix} \quad L_{comb} := \begin{pmatrix} 0 \\ 1.6 \\ 1.6 \\ 0 \\ 0 \end{pmatrix} \quad E_{comb} := \begin{pmatrix} 0 \\ 0 \\ 0 \\ 1 \\ 1.0 \end{pmatrix} \quad S_{comb} := \begin{pmatrix} 0 \\ 0.5 \\ 0 \\ 0.7 \\ 0 \end{pmatrix} \begin{matrix} \text{eq 16-1} \\ \text{eq 16-2} \\ \text{eq 16-3} \\ \text{eq 16-6} \\ \text{eq 16-7} \end{matrix}$$

Punching Shear

Two cases will be evaluated for punching shear: An IXC and a forklift tire at maximum operating weight. The punching shear capacity will be determined per the guidelines of ACI 318-14, Section 22.6.4.1. Per Section 22.6.4.1 of ACI 318-14, the critical section is located at a distance of d/2 from the edge of the IXC.

Per Section 22.6.5.2, the allowable shear is determined using Equations from Table 22.6.5.2.

IXC Punching Shear

$\beta := 1.0$ Ratio of long side to short side, circular IXC.

$\alpha := 20$ From Section 22.6.5.3 of ACI 318-14, define value for corner columns, conservative.

$c_m := 3\,in$ Minimum cover. (H-14-111608, Sh 1)

$t_r := \frac{6}{8}\,in$ Reinforcement diameter. (H-14-111608, Sh 1)

$d_r := pad_{thk} - c_m - \frac{t_r}{2} = 8.62\cdot in$ Effective depth of the concrete. (Lindeburg, pg 55-2)

$b_o := \pi\cdot\left[IXC_{dia} + 2\cdot\left(\frac{d_r}{2}\right)\right] = 11.2\,ft$ Circumference of punching shear evaluation zone.

$\lambda := 1.0$ Modification factor for normal weight concrete. (ACI 318-14, Section 19.2.4.2)

$v_{cA} := 4\cdot\lambda\cdot\sqrt{\frac{f_c}{psi}}\cdot psi = 268\,psi$ Allowable shear loading, Table 22.6.5.2 from ACI 318-14.

$v_{cB} := \left(2 + \frac{4}{\beta}\right)\cdot(\lambda)\cdot\sqrt{\frac{f_c}{psi}}\cdot psi = 402\,psi$ Allowable shear loading, Table 22.6.5.2 from ACI 318-14.

$v_{cC} := \left(2 + \frac{\alpha\cdot\sqrt{\frac{d_r}{in}}}{\frac{b_o}{ft}}\right)\cdot\left(\lambda\cdot\sqrt{\frac{f_c}{psi}}\cdot psi\right) = 487\,psi$ Allowable shear loading, Table 22.6.5.2 from ACI 318-14.

$v_c := \min(v_{cA}, v_{cB}, v_{cC}) = 268\,psi$ Nominal shear strength.

$$V_{applied_punch_IXC} := \max\left[\frac{1.6\cdot IXC_{weight}\cdot g}{(b_o)\cdot(d_r)}, \frac{1.0\cdot IXC_{weight}\cdot g}{(b_o)\cdot(d_r)} + \frac{\left[1.0\cdot\frac{F_{p_IXC}}{n_{IXC}}\cdot\left(\frac{IXC_{height}}{2}\right)\right]}{b_o\cdot d_r\cdot\frac{IXC_{dia}}{2}}\right] = 5339\cdot psf$$

Applied punching shear load, including LRFD load factors. Moment is applied as shear load acting at center of IXC.

$\phi_{shear} := 0.75$ Capacity reduction factor for shear. (ACI 318-14, Section 21.2.1)

$$DCR_{shear_punch_IXC} := \frac{V_{applied_punch_IXC}}{\phi_{shear}\cdot v_c} = 0.18$$

DCR is less than 1.0; therefore, **OK**.

Forklift Punching Shear

$$wheel_load_{flift} := \max\left(\frac{axle_load_{front}}{4}, \frac{axle_load_{rear}}{2}\right) = 39463 \cdot lb$$

Maximum concentrated point load from the forklift wheels. The forklift has four wheels on the front and two on the back.

$$tire_{area} := \frac{wheel_load_{flift} \cdot g}{p_{tire}} = 272 \cdot in^2$$

Estimated area of contact of a worst case fully loaded tire.

$$tire_{width} := 12.6in$$

Width of tire. (See Attachment 1)

$$tire_{c_length} := \frac{tire_{area}}{tire_{width}} = 21.6 \cdot in$$

Approximate contact length of the tire.

$$tire_conc_{length} := d_r + tire_{c_length} = 30.2 \cdot in$$

$$tire_conc_{width} := d_r + tire_{width} = 21.2 \cdot in$$

Perimeter dimensions of punching shear area located at critical distance d/2 from load imprint.

$$tire_conc_perim := 2 \cdot \left(tire_conc_{length} + tire_conc_{width}\right) = 102.9 \cdot in$$

Total perimeter length of punching shear area.

$$V_{tire} := \phi_{shear} \cdot (v_c) \cdot \left(tire_conc_perim \cdot d_r\right) = 178588\, lbf$$

Allowable load on concrete forklift wheel area.

$$DCR_{punch.shear.flift} := \frac{wheel_load_{flift} \cdot g}{V_{tire}} = 0.22$$

DCR is less than 1.0; therefore, **OK**.

Additionally, check the two front tires side-by-side.

$$wheel_load_{flift} := \frac{axle_load_{front}}{2} = 13118 \cdot lb$$

$$tire_conc_perim := 2 \cdot \left(tire_conc_{length} + 2 \cdot tire_conc_{width}\right) = 145.3 \cdot in$$

Total perimeter length of punching shear area.

$$V_{tire} := \phi_{shear} \cdot (v_c) \cdot \left(tire_conc_perim \cdot d_r\right) = 252271\, lbf$$

Allowable load on concrete forklift wheel area.

$$DCR_{punch.shear.flift} := \frac{wheel_load_{flift} \cdot g}{V_{tire}} = 0.05$$

DCR is less than 1.0; therefore, **OK**.

One-Way Shear

$L_{pedge} := 5\,ft$ — Length of perimeter between the edge of the IXCs and the edge of the pad. (H-14-111605, Sh 1)

$L_{IXCm} := L_{pad} - 2 \cdot L_{pedge} = 92.7\,ft$ — Length of IXC matrix.

$B_{IXCm} := B_{pad} - 2L_{pedge} = 45.7\,ft$ — Width of IXC matrix.

$$P_u := L_{comb} \cdot \left(IXC_{weight} \cdot g \cdot n_{IXC} + wt_{flift} \cdot g\right) \ldots + E_{comb} \cdot F_{v_IXC} + S_{comb} \cdot F_{SA} \cdot L_{IXCm} \cdot B_{IXCm} = \begin{pmatrix} 0 \\ 7013 \\ 6987 \\ 282 \\ 245 \end{pmatrix} \cdot kip$$

Total vertical load acting on pad.

$$M_u := E_{comb} \cdot F_{p_IXC} \cdot \left(\frac{IXC_{height}}{2}\right) = \begin{pmatrix} 0 \\ 0 \\ 0 \\ 1855 \\ 1855 \end{pmatrix} \cdot ft \cdot kip$$

Moment acting on pad due to seismic loading on the IXCs. Note that applying the moment of the IXCs (pinned connection to pad) is conservative.

$$e_1 := \frac{L_{pad} - L_{IXCm} - d_r}{2} = 4.6 \cdot ft$$

Approximate maximum distance from critical section to the edge of the concrete pad. (See illustration on Lindeburg, Figure 55.3)

$$e_2 := \frac{B_{pad} - B_{IXCm} - d_r}{2} = 4.6 \cdot ft$$

Approximate maximum distance from critical section to the edge of the concrete pad. (See illustration on Lindeburg, Figure 55.3)

$$q_{u1} := \frac{P_u}{L_{pad} \cdot B_{pad}} + \frac{M_u}{\left(\frac{L_{pad}}{2} - \frac{e_1}{2}\right) \cdot \left(e_1 \cdot B_{pad}\right)} = \begin{pmatrix} 0.0 \\ 1227.2 \\ 1222.5 \\ 195.9 \\ 189.3 \end{pmatrix} \cdot psf$$

Pressure under pad (moment in lengthwise direction). Conservatively apply moment at center of critical section. (Lindeburg, eq 55.11)

$$q_{u2} := \frac{P_u}{L_{pad} \cdot B_{pad}} + \frac{M_u}{\left(\frac{B_{pad}}{2} - \frac{e_2}{2}\right) \cdot \left(e_2 \cdot L_{pad}\right)} = \begin{pmatrix} 0.0 \\ 1227.2 \\ 1222.5 \\ 202.0 \\ 195.4 \end{pmatrix} \cdot psf$$

Pressure under pad (moment in widthwise direction). Conservatively apply moment at center of critical section. (Lindeburg, eq 55.11)

$$q_u := \max\left(q_{u1}, q_{u2}\right) = 1227.2 \cdot psf$$

Pressure under pad (max). Conservatively apply moment at center of critical section. (Lindeburg, eq 55.11)

$$\upsilon_u := \frac{q_u \cdot e_1}{d_r} = 55.0\,psi$$

Shear stress due to factored loads. (Lindeburg, eq 55.12)

$$\upsilon_c := 2 \cdot \lambda \cdot \sqrt{\frac{f_c}{psi}} \cdot psi = 134.2\,psi$$

Nominal concrete shear stress. (ACI 318-14, eq 22.5.5.1)

$$DCR_{oneway} := \max\left(\frac{\upsilon_u}{\phi_{shear} \cdot \upsilon_c}\right) = 0.55$$

Worst case DCR is less than 1.0; therefore, **OK**.

Pad Reinforcement

$M_{u1} := 200kip \cdot ft$ — Moment acting at the critical section (moment in lengthwise direction). (See Appendix A, Load Case 5, rounded up)

$M_{u2} := 200kip \cdot ft$ — Moment acting at the critical section (moment in widthwise direction). (See Appendix A, Load Case 5, rounded up)

$A_r := \frac{\pi t_r^2}{4} = 0.442 \cdot in^2$ — Reinforcement cross-sectional area.

$s_r := 12in$ — Reinforcement spacing. (H-14-111608)

$A_{s1} := A_r \cdot \frac{B_{pad}}{s_r} = 24.593 \cdot in^2$ — Reinforcement area in width of pad.

$A_{s2} := A_r \cdot \frac{L_{pad}}{s_r} = 45.357 \cdot in^2$ — Reinforcement area in length of pad.

$A_{c1} := \frac{f_y \cdot A_{s1}}{\left[0.85 - \frac{0.05 \cdot (f_c - 4000psi)}{1000psi}\right] \cdot f_c} = 397.5 \cdot in^2$ — Required concrete area (width) to match steel strength. (ACI 318-14, Table 22.2.2.4.3)

$A_{c2} := \frac{f_y \cdot A_{s2}}{\left[0.85 - \frac{0.05 \cdot (f_c - 4000psi)}{1000psi}\right] f_c} = 733.0 \cdot in^2$ — Required concrete area (length) to match steel strength. (ACI 318-14, Table 22.2.2.4.3)

$\lambda_1 := \frac{A_{c1}}{2 \cdot B_{pad}} = 0.30 \cdot in$ — Distance from centroid of extreme compression area to extreme compression fiber (moment in lengthwise direction). (Lindeburg, pg 55-8)

$\lambda_2 := \frac{A_{c2}}{2 \cdot L_{pad}} = 0.30 \cdot in$ — Distance from centroid of extreme compression area to extreme compression fiber (moment in widthwise direction). (Lindeburg, pg 55-8)

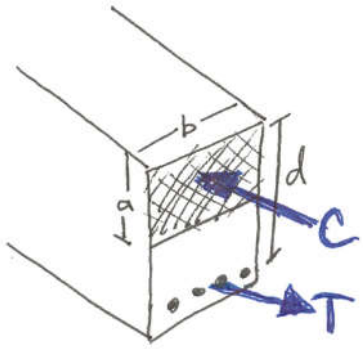

concrete compressive strength = steel tensile strength

$0.85 \cdot f'_c \cdot b \cdot a = A_s \cdot f_y$

See figure to left for visual.

$\phi := 0.90$ — Capacity reduction factor. (ACI 318-14, Section 21.2)

$A_{s_req1} := \dfrac{M_{u1}}{\phi \cdot f_y \cdot (d_r - \lambda_1)} = 5.3 \cdot in^2$ — Minimum steel area (moment in lengthwise direction). (Lindeburg, eq 55.24)

$A_{s_req2} := \dfrac{M_{u2}}{\phi \cdot f_y \cdot (d_r - \lambda_2)} = 5.3 \cdot in^2$ — Minimum steel area (moment in widthwise direction). (Lindeburg, eq 55.24)

$A_{s_shrink1} := 0.0018 \cdot pad_{thk} \cdot B_{pad} = 14.43 \cdot in^2$ — Required area of shrinkage and temperature reinforcement (width). (ACI 318-14, Section 7.6.1.1)

$A_{s_shrink2} := 0.0018 \cdot pad_{thk} \cdot L_{pad} = 26.61 \cdot in^2$ — Required area of shrinkage and temperature reinforcement (length). (ACI 318-14, Section 7.6.1.1)

$A_{s_min1} := \max(A_{s_req1}, A_{s_shrink1}) = 14.43 \cdot in^2$ — Minimum required area of reinforcement (width).

$A_{s_min2} := \max(A_{s_req2}, A_{s_shrink2}) = 26.61 \cdot in^2$ — Minimum required area of reinforcement (length).

$DCR_{reinforcement1} := \dfrac{A_{s_min1}}{A_{s1}} = 0.59$ — DCR is less than 1.0; therefore, **OK**.

$DCR_{reinforcement2} := \dfrac{A_{s_min2}}{A_{s2}} = 0.59$ — DCR is less than 1.0; therefore, **OK**.

Check the reinforcement spacing per ACI 318-14, Section 7.7.2.3

$$Sp_Check := \begin{cases} \text{"Reinforcement spacing acceptable."} & \text{if } s_r < \min(18in, 3 \cdot pad_{thk}) \\ \text{"Reinforcement spacing not acceptable."} & \text{otherwise} \end{cases} = \text{"Reinforcement spacing acceptable."}$$

$t_{rt} := \frac{6}{8}in$ — Diameter of the top reinforcement.

$s_{rt} := 12in$ — Spacing of the top reinforcement.

$$DCR_{shrink1} := \frac{A_{s_shrink1}}{\frac{\pi t_{rt}^2}{4} \cdot \frac{B_{pad}}{s_{rt}}} = 0.59$$

DCR is less than 1.0; therefore, **OK**.

$$DCR_{shrink2} := \frac{A_{s_shrink2}}{\frac{\pi t_{rt}^2}{4} \cdot \frac{L_{pad}}{s_{rt}}} = 0.59$$

DCR is less than 1.0; therefore, **OK**.

Development Length of Reinforcement

$\lambda := 1.0$ — Lightweight aggregate factor. (Lindeburg, pg 55-5 and ACI 318-14, Table 25.4.2.4)

$\psi_t := 1.0$ — Reinforcement location factor. (Lindeburg, pg 55-5 and ACI 318-14, Table 25.4.2.4)

$\psi_e := 1.0$ — Epoxy coating factor. (Lindeburg, pg 55-5 and ACI 318-14, Table 25.4.2.4)

$$l_d := \begin{cases} \max\left(\frac{3 \cdot t_r \cdot \frac{f_y}{psi} \cdot \psi_t \cdot \psi_e \cdot \lambda}{50 \cdot \sqrt{\frac{f_c}{psi}}}, 12in\right) & \text{if } t_r \le \frac{6}{8}in \\ \max\left(\frac{3 \cdot t_r \cdot \frac{f_y}{psi} \cdot \psi_t \cdot \psi_e \cdot \lambda}{40 \cdot \sqrt{\frac{f_c}{psi}}}, 12in\right) & \text{otherwise} \end{cases} = 40.2 \cdot in$$

Development length of the reinforcement (bottom reinforcement). (Lindeburg, eq 55.27 and ACI 318-14, Table 25.4.2.2)

$$l_{dt} := \begin{cases} \max\left(\frac{3 \cdot t_{rt} \cdot \frac{f_y}{psi} \cdot \psi_t \cdot \psi_e \cdot \lambda}{50 \cdot \sqrt{\frac{f_c}{psi}}}, 12in\right) & \text{if } t_r \le \frac{6}{8}in \\ \max\left(\frac{3 \cdot t_{rt} \cdot \frac{f_y}{psi} \cdot \psi_t \cdot \psi_e \cdot \lambda}{40 \cdot \sqrt{\frac{f_c}{psi}}}, 12in\right) & \text{otherwise} \end{cases} = 40.2 \cdot in$$

Development length of the reinforcement (top reinforcement). (Lindeburg, eq 55.27 and ACI 318-14, Table 25.4.2.2)

$l_{st} := 1.3 \cdot l_d = 52.3 \cdot in$ — Lap splice length (bottom reinforcement). (ACI 318-14, Table 25.5.2.1)

$l_{stt} := 1.3 \cdot l_{dt} = 52.3 \cdot in$ — Lap splice length (top reinforcement). (ACI 318-14, Table 25.5.2.1)

Control Joints

Per PCA Engineering Bulletin, 2008, pg 107 large areas can be cast without control joints if the amount of distributed steel in the top 1/3 of the slab is approximately 0.5% - 0.7% of the cross sectional area.

$$top_{percent} := \frac{\frac{\pi t_{rt}^2}{4 \cdot s_{rt}}}{pad_{thk}} = 0.31 \cdot \%$$

Percent of steel in the top 1/3 of pad. Since this value does not meet the minimum to not use control joints, try using the same reinforcement as in the bottom.

$$top_{percent} := \frac{\frac{\pi t_r^2}{4 \cdot s_r}}{pad_{thk}} = 0.31 \cdot \%$$

Percent of steel in the top 1/3 of pad. Use the same reinforcement at the top of the slab as at the bottom in order to avoid having control joints.

The reinforcement is not sufficient to eliminate the need for control joints. Additionally, the use of the pad does not require the elimination of control joints. Therefore, control joints will be included in the design.

Contraction Joint Spacing

The contraction joints shall be spaced at 15-20' per TM 5-809-1, Table 5-2

Table 5-2. Recommended Spacing of Transverse Contraction Joints

Slab Thickness in.	Joint Spacing ft.
4 - 6*	Up to 12.5
6 - 9	12.5-15.0
9 - 12	15.0-20.0
> 12	20.0 - 25.0

*This thickness is allowed for steel-fiber reinforced concrete only.

Joint Sealant Detail Design

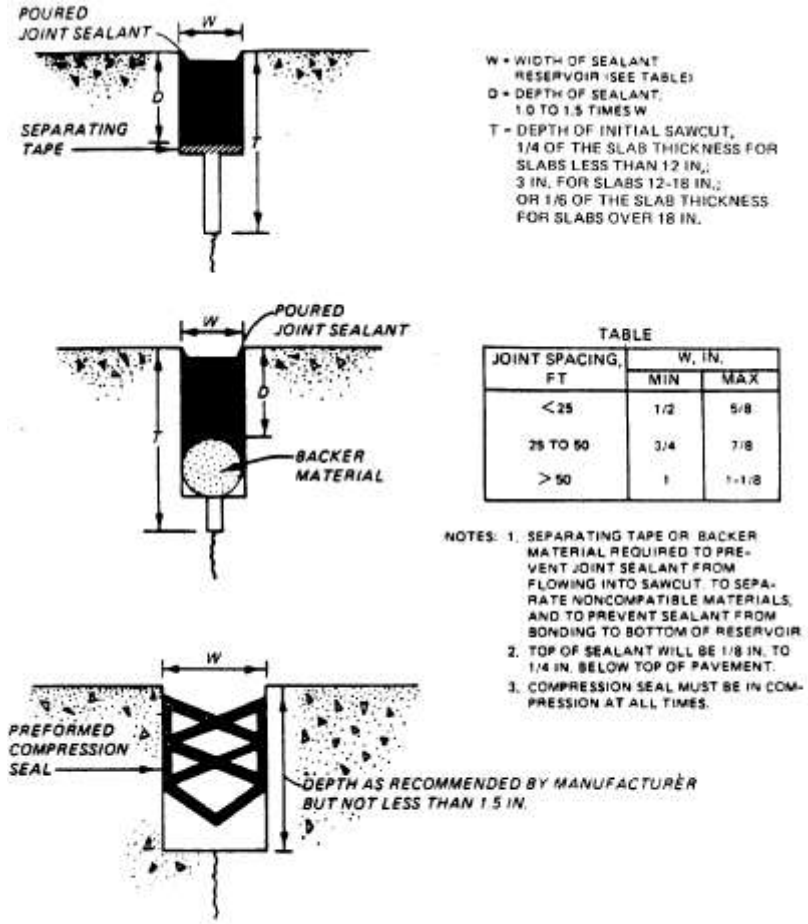

Figure 5-7. Joint sealant details.

$h_r := pad_{thk} = 12.0 \cdot in$ — Slab height.

$w_{sealant} := \frac{1}{2} in$ — Minimum width of sealant reservoir based on 15 ft to 20 ft joint spacing. (TM 5-809-1, Figure 5-7)

$d_{sealant} := 1.5 \cdot w_{sealant} = 0.8 \cdot in$ — Depth of sealant based on width of sealant reservoir. (TM 5-809-1, Figure 5-7)

$$t_{depth} := \begin{cases} \left(\frac{1}{4} \cdot h_r\right) & \text{if } h_r < 12in \\ 3in & \text{if } 12in \le h_r \le 18in \\ \frac{1}{6} \cdot h_r & \text{otherwise} \end{cases} = 3.00 \cdot in$$

Depth of initial sawcut (TM 5-809-1, Figure 5-7)

Dowel Length and Spacing

Table 5-3. Dowel size and spacing

Pavement Thickness inches	Minimum Dowel Length inches	Maximum Dowel Spacing inches	Dowel Diameter and Type
Less than 8	16	12	3/4-inch bar
8 to and including 11.5	16	12	1-inch bar
12 to and including 15.5	20	15	1- to 1-1/4-inch bar, or 1-inch extra-strength pipe
16 to and including 20.5	20	18	1- to 1-1/2-inch bar, or 1-1-1/2-inch extra-strength pipe
21 to and including 25.5	24	18	2-inch bar, or 2-inch extra-strength pipe
Over 26	30	18	3-inch bar, or 3-inch extra strength pipe

$l_{dowel} := 20in$ Minimum dowel length to develop tension for crack control. (TM 5-809-1, Table 5-3)

$s_{dowel} := 15in$ Minimum dowel spacing to develop tension for crack control. (TM 5-809-1, Table 5-3)

$d_{dowel} := 1in$ Dowel diameter to develop tension for crack control. (TM 5-809-1, Table 5-3)

8.5 Evaluate Haul Path

Since the IXCs will not be anchored to the haul path, the haul path is not subject to the same loading as the storage pad. The haul path will be evaluated for punching shear and bending and in accordance with TM 5-809-1. The size of the path is taken as a section equivalent to the overall width of the haul path by the distance between control joints.

Punching Shear

Two cases will be evaluated for punching shear: An IXC and a forklift tire at maximum operating weight. The punching shear capacity will be determined per the guidelines of ACI 318-14, Section 22.6.4.1. Per Section 22.6.4.1 of ACI 318-14, the critical section is located at a distance of d/2 from the edge of the IXC.

Per Section 22.6.5.2, the allowable shear is determined using Table 22.6.5.2.

IXC Punching Shear

$\beta := 1.0$ — Ratio of long side to short side, circular IXC.

$\alpha := 20$ — From 22.6.5.3 of ACI 318-14, define value for corner columns, conservative.

$c_m := 3\text{in}$ — Minimum cover. (H-14-111608)

$path_{thk} := 10\text{in}$ — Haul path concrete thickness. (H-14-111608)

$t_r := \frac{5}{8}\text{in}$ — Reinforcement diameter. (H-14-111608)

$d_r := path_{thk} - c_m - \frac{t_r}{2} = 6.69\cdot\text{in}$ — Effective depth of the concrete. (Lindeburg, pg 55-2)

$b_o := \pi\cdot\left[IXC_{dia} + 2\cdot\left(\frac{d_r}{2}\right)\right] = 10.7\,\text{ft}$ — Circumference of punching shear evaluation zone.

$\lambda := 1.0$ — Modification factor for normal weight concrete. (ACI 318-14, Section 19.2.4.2)

$v_{cA} := 4\cdot\lambda\cdot\sqrt{\frac{f_c}{psi}}\cdot psi = 268\,\text{psi}$ — Allowable shear loading, Table 22.6.5.2 from ACI 318-14.

$v_{cB} := \left(2 + \frac{4}{\beta}\right)\cdot(\lambda)\cdot\sqrt{\frac{f_c}{psi}}\cdot psi = 402\,\text{psi}$ — Allowable shear loading, Table 22.6.5.2 from ACI 318-14.

$v_{cC} := \left(2 + \frac{\alpha\cdot\sqrt{\frac{d_r}{in}}}{\frac{b_o}{ft}}\right)\cdot\left(\lambda\cdot\sqrt{\frac{f_c}{psi}}\cdot psi\right) = 460\,\text{psi}$ — Allowable shear loading, Table 22.6.5.2 from ACI 318-14.

$v_c := \min(v_{cA}, v_{cB}, v_{cC}) = 268\,\text{psi}$ — Nominal shear strength.

$$V_{applied_punch_IXC} := \max\left[\frac{1.6\cdot IXC_{weight}\cdot g}{(b_o)\cdot(d_r)}, \frac{1.0\cdot IXC_{weight}\cdot g}{(b_o)\cdot(d_r)} + \frac{\left[1.0\cdot\frac{F_{p_IXC}}{n_{IXC}}\cdot\left(\frac{IXC_{height}}{2}\right)\right]}{b_o\cdot d_r\cdot\frac{IXC_{dia}}{2}}\right] = 7213\cdot psf$$

Applied punching shear load, including LRFD load factors. Moment is applied as shear load acting at center of IXC.

$\phi_{shear} := 0.75$ Capacity reduction factor for shear. (ACI 318-14, Section 21.2.1)

$$DCR_{shear_punch_IXC} := \frac{V_{applied_punch_IXC}}{\phi_{shear}\cdot v_c} = 0.25$$

DCR is less than 1.0; therefore, **OK**.

Forklift Punching Shear

$tire_conc_{length} := d_r + tire_{c_length} = 28.3\cdot in$

$tire_conc_{width} := d_r + tire_{width} = 19.3\cdot in$

Perimeter dimensions of punching shear area located at critical distance d/2 from load imprint.

$tire_conc_perim := 2\cdot(tire_conc_{length} + tire_conc_{width}) = 95.1\cdot in$ Total perimeter length of punching shear area.

$V_{tire} := \phi_{shear}\cdot(v_c)\cdot(tire_conc_perim\cdot d_r) = 128040\,lbf$ Allowable load on concrete forklift wheel area.

$$DCR_{punch.shear.flift} := \frac{wheel_load_{flift}\cdot g}{V_{tire}} = 0.10$$

DCR is less than 1.0; therefore, **OK**.

Additionally, check the two front tires side-by-side.

$tire_conc_perim := 2\cdot(tire_conc_{length} + 2\cdot tire_conc_{width}) = 133.7\cdot in$ Total perimeter length of punching shear area.

$V_{tire} := \phi_{shear}\cdot(v_c)\cdot(tire_conc_perim\cdot d_r) = 179956\,lbf$ Allowable load on concrete forklift wheel area.

$$DCR_{punch.shear.flift} := \frac{wheel_load_{flift}\cdot g}{V_{tire}} = 0.07$$

DCR is less than 1.0; therefore, **OK**.

Pad Reinforcement

$L_{hp} := 25ft$ $B_{hp} := 15ft$

Lengths and widths of the haul path. (H-14-111606) Set width as the distance between control joints. Set length as overall width of haul path. This method is conservative.

$W_{flift} := 100in = 8.3\,ft$ $L_{flift} := 148in = 12.3\,ft$ Width and length of forklift. (See Attachment 1)

$l_1 := \frac{L_{hp} - L_{flift}}{2} = 6.3 \cdot ft$

Approximate maximum distance between the edge of the forklift and the edge of the haul path (lengthwise direction).

$l_2 := \frac{B_{hp} - W_{flift}}{2} = 3.3 \cdot ft$

Approximate maximum distance between the forklift and the edge of the haul path (widthwise direction).

$q_{u1} := \frac{wt_{flift} \cdot g}{L_{hp} \cdot B_{hp}} = 225.8 \cdot psf$

Pressure under pad (moment in lengthwise direction). Conservatively apply moment at center of critical section. (Lindeburg, eq 55.11)

$q_{u2} := q_{u1} = 225.8 \cdot psf$

Pressure under pad (moment in widthwise direction). Conservatively apply moment at center of critical section. (Lindeburg, eq 55.11)

$M_{u1} := \frac{q_{u1} \cdot B_{hp} \cdot l_1^2}{2} = 67.9 \cdot kip \cdot ft$

Moment acting at the critical section (moment in lengthwise direction). (Lindeburg, eq 55.23)

$M_{u2} := \frac{q_{u2} \cdot L_{hp} \cdot l_2^2}{2} = 31.4 \cdot kip \cdot ft$

Moment acting at the critical section (moment in widthwise direction). (Lindeburg, eq 55.23)

$A_r := \frac{\pi t_r^2}{4} = 0.307 \cdot in^2$

Reinforcement cross-sectional area.

$s_r := 12in$

Reinforcement spacing. (H-14-111608)

$A_{s1} := A_r \cdot \frac{B_{hp}}{s_r} = 4.602 \cdot in^2$

Reinforcement area in width of pad.

$A_{s2} := A_r \cdot \frac{L_{hp}}{s_r} = 7.670 \cdot in^2$

Reinforcement area in length of pad.

$A_{c1} := \frac{f_y \cdot A_{s1}}{\left[0.85 - \frac{0.05 \cdot (f_c - 4000psi)}{1000psi}\right] \cdot f_c} = 74.4 \cdot in^2$

Required concrete area (width) to match steel strength. (ACI 318-14, Table 22.2.2.4.3)

$A_{c2} := \frac{f_y \cdot A_{s2}}{\left[0.85 - \frac{0.05 \cdot (f_c - 4000psi)}{1000psi}\right] \cdot f_c} = 124.0 \cdot in^2$

Required concrete area (length) to match steel strength. (ACI 318-14, Table 22.2.2.4.3)

$\lambda_1 := \frac{A_{c1}}{2 \cdot B_{hp}} = 0.21 \cdot in$

Distance from centroid of extreme compression area to extreme compression fiber (moment in lengthwise direction). (Lindeburg, pg 55-8)

$\lambda_2 := \frac{A_{c2}}{2 \cdot L_{hp}} = 0.21 \cdot in$

Distance from centroid of extreme compression area to extreme compression fiber (moment in widthwise direction). (Lindeburg, pg 55-8)

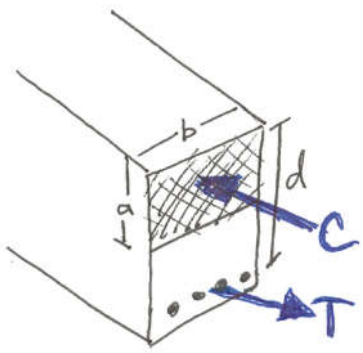

concrete compressive strength = steel tensile strength

$0.85 \cdot f'_c \cdot b \cdot a = A_s \cdot f_y$

See figure to left for visual.

$\phi := 0.90$

Capacity reduction factor. (ACI 318-14, Section 21.2)

$A_{s_req1} := \frac{M_{u1}}{\phi \cdot f_y \cdot (d_r - \lambda_1)} = 2.33 \cdot in^2$

Minimum steel area (moment in lengthwise direction). (Lindeburg, eq 55.24)

$A_{s_req2} := \frac{M_{u2}}{\phi \cdot f_y \cdot (d_r - \lambda_2)} = 1.08 \cdot in^2$

Minimum steel area (moment in widthwise direction). (Lindeburg, eq 55.24)

$A_{s_shrink1} := 0.0018 \cdot path_{thk} \cdot B_{hp} = 3.24 \cdot in^2$

Required area of shrinkage and temperature reinforcement (width). (ACI 318-14, Section 7.6.1.1)

$A_{s_shrink2} := 0.0018 \cdot path_{thk} \cdot L_{hp} = 5.40 \cdot in^2$

Required area of shrinkage and temperature reinforcement (length). (ACI 318-14, Section 7.6.1.1)

$A_{s_min1} := \max(A_{s_req1}, A_{s_shrink1}) = 3.24 \cdot in^2$

Minimum required area of reinforcement (width).

$A_{s_min2} := \max(A_{s_req2}, A_{s_shrink2}) = 5.40 \cdot in^2$

Minimum required area of reinforcement (length).

$DCR_{reinforcement1} := \frac{A_{s_min1}}{A_{s1}} = 0.70$

DCR is less than 1.0; therefore, **OK**.

$DCR_{reinforcement2} := \frac{A_{s_min2}}{A_{s2}} = 0.70$

DCR is less than 1.0; therefore, **OK**.

Check the reinforcement spacing per ACI 318-14, Section 7.7.2.3

$Sp_Check := \begin{cases} \text{"Reinforcement spacing acceptable."} & \text{if } s_r < \min(18in, 3 \cdot path_{thk}) \\ \text{"Reinforcement spacing not acceptable."} & \text{otherwise} \end{cases} = \text{"Reinforcement spacing acceptable."}$

$t_{rt} := \frac{5}{8}in$ Diameter of the top reinforcement.

$s_{rt} := 12in$ Spacing of the top reinforcement.

$$DCR_{shrink1} := \frac{A_{s_shrink1}}{\frac{\pi t_{rt}^2}{4} \cdot \frac{B_{hp}}{s_{rt}}} = 0.70$$

DCR is less than 1.0; therefore, **OK**.

$$DCR_{shrink2} := \frac{A_{s_shrink2}}{\frac{\pi t_{rt}^2}{4} \cdot \frac{L_{hp}}{s_{rt}}} = 0.70$$

DCR is less than 1.0; therefore, **OK**.

Development Length of Reinforcement

$$l_d := \begin{cases} \max\left(\frac{3 \cdot t_r \cdot \frac{f_y}{psi} \cdot \psi_t \cdot \psi_e \cdot \lambda}{50 \cdot \sqrt{\frac{f_c}{psi}}}, 12in\right) & \text{if } t_r \le \frac{6}{8}in \\ \max\left(\frac{3 \cdot t_r \cdot \frac{f_y}{psi} \cdot \psi_t \cdot \psi_e \cdot \lambda}{40 \cdot \sqrt{\frac{f_c}{psi}}}, 12in\right) & \text{otherwise} \end{cases} = 33.5 \cdot in$$

Development length of the reinforcement (bottom reinforcement). (Lindeburg, eq 55.27 and ACI 318-14, Table 25.4.2.2)

$$l_{dt} := \begin{cases} \max\left(\frac{3 \cdot t_{rt} \cdot \frac{f_y}{psi} \cdot \psi_t \cdot \psi_e \cdot \lambda}{50 \cdot \sqrt{\frac{f_c}{psi}}}, 12in\right) & \text{if } t_r \le \frac{6}{8}in \\ \max\left(\frac{3 \cdot t_{rt} \cdot \frac{f_y}{psi} \cdot \psi_t \cdot \psi_e \cdot \lambda}{40 \cdot \sqrt{\frac{f_c}{psi}}}, 12in\right) & \text{otherwise} \end{cases} = 33.5 \cdot in$$

Development length of the reinforcement (top reinforcement). (Lindeburg, eq 55.27 and ACI 318-14, Table 25.4.2.2)

$l_{st} := 1.3 \cdot l_d = 43.6 \cdot in$ Lap splice length (bottom reinforcement). (ACI 318-14, Table 25.5.2.1)

$l_{stt} := 1.3 \cdot l_{dt} = 43.6 \cdot in$ Lap splice length (top reinforcement). (ACI 318-14, Table 25.5.2.1)

Check Pad Size In Accordance with TM 5-809-1

$s := 9 \cdot \sqrt{\frac{f_c}{psi}} \cdot psi = 603.7\,psi$ Concrete flexural strength. (TM 5-809-1, pg 3-5)

$k_{soil} := 250 \cdot \frac{lbf}{in^3}$ Modulus of subgrade reaction. (See Design Inputs)

$axle_load := \max(axle_load_{front}, axle_load_{rear}) \cdot g = 79 \cdot kip$ Maximum axle load of forklift.

The results using TM 5-809-1, Figure 5-2 below (~9"+) are consistent to that calculated above.

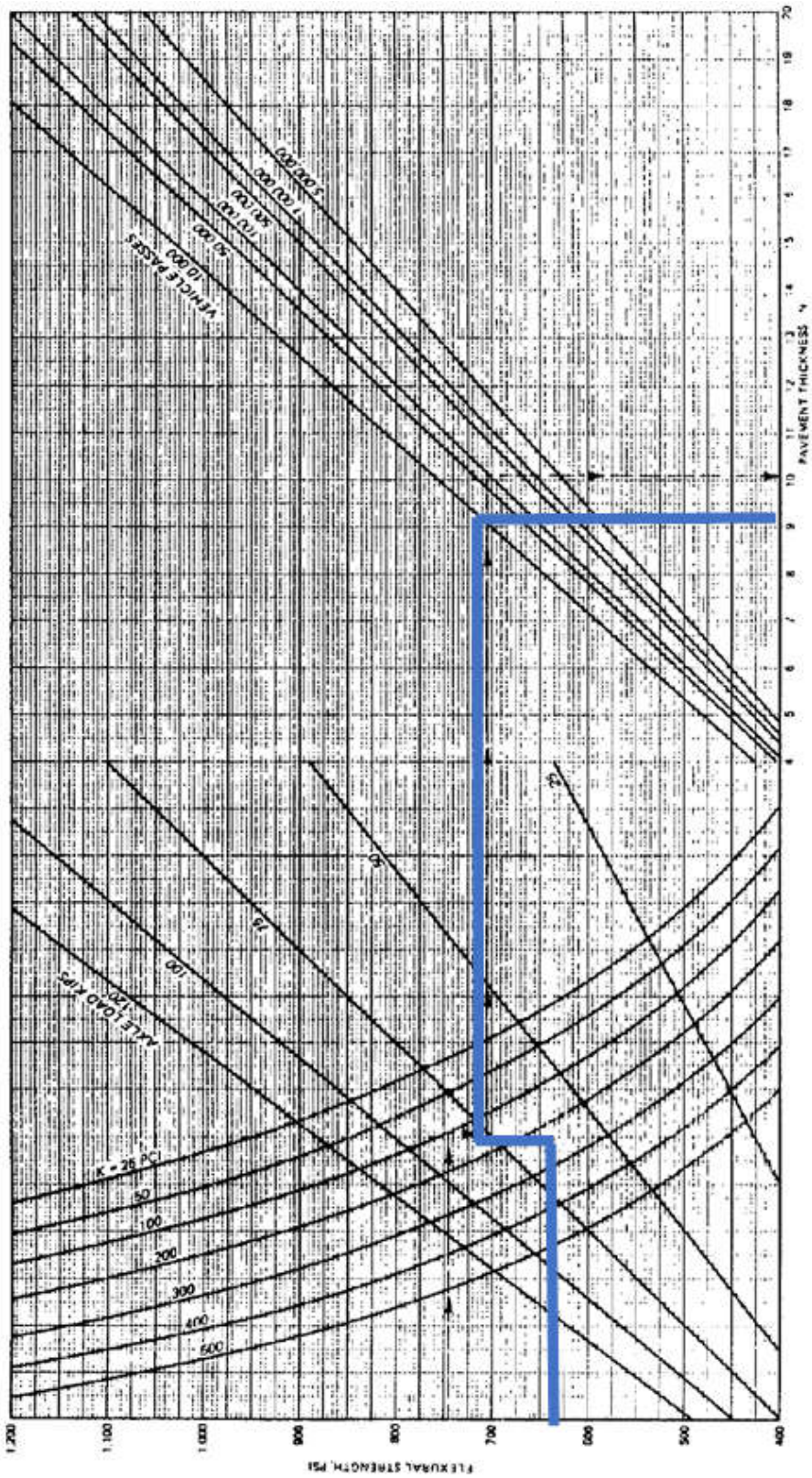

TM 5-809-1, Figure 5-2 (Annotated)

Contraction Joint Spacing

The contraction joints shall be spaced at 15-20' per TM 5-809-1, Table 5-2

Table 5-2. Recommended Spacing of Transverse Contraction Joints

Slab Thickness in.	Joint Spacing ft.
4 - 6*	Up to 12.5
6 - 9	12.5-15.0
9 - 12	15.0-20.0
> 12	20.0 - 25.0

*This thickness is allowed for steel-fiber reinforced concrete only.

Joint Sealant Detail Design

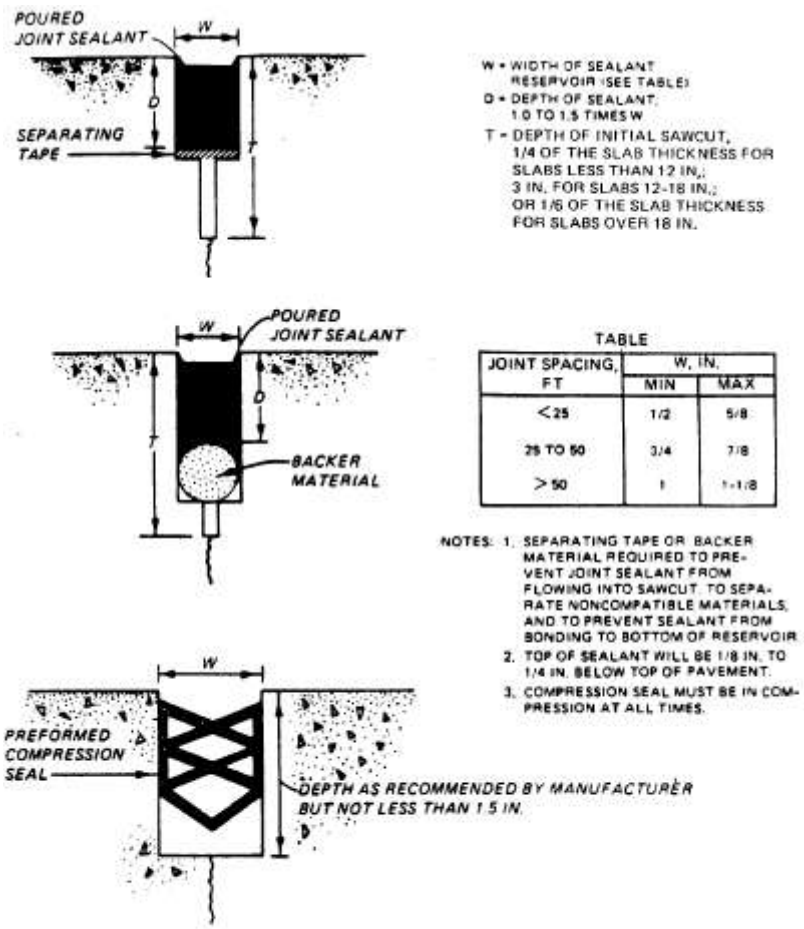

Figure 5-7. Joint sealant details.

$h_r := path_{thk} = 10.0 \cdot in$ Slab height.

$w_{sealant} := \frac{1}{2} in$ Minimum width of sealant reservoir based on 15 ft to 20 ft joint spacing. (TM 5-809-1, Figure 5-7)

$d_{sealant} := 1.5 \cdot w_{sealant} = 0.8 \cdot in$ Depth of sealant based on width of sealant reservoir. (TM 5-809-1, Figure 5-7)

$$t_{depth} := \begin{cases} \left(\frac{1}{4} \cdot h_r\right) & \text{if } h_r < 12in \\ 3in & \text{if } 12in \le h_r \le 18in \\ \frac{1}{6} \cdot h_r & \text{otherwise} \end{cases} = 2.50 \cdot in$$

Depth of initial sawcut (TM 5-809-1, Figure 5-7)

Dowel Length and Spacing

Table 5-3. Dowel size and spacing

Pavement Thickness inches	Minimum Dowel Length inches	Maximum Dowel Spacing inches	Dowel Diameter and Type
Less than 8	16	12	3/4-inch bar
8 to and including 11.5	16	12	1-inch bar
12 to and including 15.5	20	15	1- to 1-1/4-inch bar, or 1-inch extra-strength pipe
16 to and including 20.5	20	18	1- to 1-1/2-inch bar, or 1-1-1/2-inch extra-strength pipe
21 to and including 25.5	24	18	2-inch bar, or 2-inch extra-strength pipe
Over 26	30	18	3-inch bar, or 3-inch extra strength pipe

$l_{dowel} := 16in$ Minimum dowel length to develop tension for crack control. (TM 5-809-1, Table 5-3)

$s_{dowel} := 12in$ Minimum dowel spacing to develop tension for crack control. (TM 5-809-1, Table 5-3)

$d_{dowel} := 1in$ Dowel diamter to develop tension for crack control. (TM 5-809-1, Table 5-3)

8.6 Evaluate Embed Plates and Weld Studs

$V_{bp} := 42889\text{lbf}$ — Shear load per anchoring plate. (See Design Inputs)

$M_{bp} := 1998079\text{in}\cdot\text{lbf}$ — Moment load per anchoring plate. (See Design Inputs)

$d_b := 50\text{in}$ — Distance between the bolts which bolt thru the TSCR anchoring base and into the embedded plates. (H-14-111293, Sh 1)

$n_b := 4$ — Number of bolts along the edge of the TSCR anchoring base. (H-14-111293, Sh 1)

$T_{bolt} := \frac{M_{bp}}{d_b \cdot n_b} = 9990\,\text{lbf}$ — Tension load per TSCR anchoring plate thru bolt. It is recognized that in some cases, two baseplates are attched to the same embed plate. However, the uniformity of the assembly will cause the IXCs to act in unison and the loading will not be applied simultaneously. Note that the stud spacing is greater on the embed plates attached to two baseplates. Additionally note that only two studs are credited to resist the loads at each baseplate to embed plate connection bolt.

$V_{bolt} := \frac{V_{bp}}{n_b \cdot 2} \cdot 2 = 10722\,\text{lbf}$ — Shear load per TSCR anchoring plate thru bolt. Note that the factor of 2 is to account for the cases where two baseplates are attached to the same embed plate.

$n_{stud} := 1$ — Number of stud pairs credited to resist the tension and shear loads (T_{bp} and V_{bp}). Note that this value is conservative.

$T_{stud} := \frac{T_{bolt}}{n_{stud}} = 9990\,\text{lbf}$ — Tension load per stud pair.

$V_{stud} := \frac{V_{bolt}}{n_{stud}} = 10722\,\text{lbf}$ — Shear load per stud pair.

Steel Strength (Tension and Shear)

$\phi_t := 0.75$ — Steel strength reduction factor (tension). (PCI, Section 6.5.2 and ACI 318-14, Section 17.3.3)

$\phi_v := 0.65$ — Steel strength reduction factor (shear). (PCI, Section 6.5.2 and ACI 318-14, Section 17.3.3)

$A_{se} := 0.31\text{in}^2$ — Nominal area of the headed stud shank. (H-14-111609 and PCI, Table 6.5.1.2)

$f_{ut} := 70\text{ksi}$ — Minimum ultimate tensile strength. (Nelson, pg 45)

$N_s := A_{se} \cdot f_{ut} = 21700\,\text{lbf}$ — Nominal tensile strength of an anchor based upon steel capacity. (PCI, Section 6.5.2)

$V_s := N_s = 21700\,\text{lbf}$ — Nominal shear strength of an anchor based upon steel capacity. (PCI, Section 6.5.2)

$\phi N_s := \phi_t \cdot N_s = 16275\,\text{lbf}$ — Design tensile strength of an anchor based upon steel capacity. (PCI, Section 6.5.2)

$\phi V_s := \phi_v \cdot V_s = 14105\,\text{lbf}$ — Design shear strength of an anchor based upon steel capacity. (PCI, Section 6.5.2)

Concrete Breakout Strength (Tension)

$h_{ef} := 6\frac{3}{16}in - 0.312in = 5.88 \cdot in$ — Embedment depth. (H-14-111609 and Nelson, pg 19)

$s_{wsNS} := 12in$ $s_{wsEW} := 6in$ — Weld stud spacing in the North-South and East-West directions. (H-14-111609)

$\lambda := 1.0$ — Concrete weight coefficient (normal weight). (PCI, Section 4.3.3 and ACI 318-14, Section 19.2.4.2)

$d_{emin} := 4ft$ $c_{a_min} := d_{emin} = 4.0\,ft$ — Conservative estimate of the minimum edge distance. (H-14-111609)

$e_N := 0in$ — No eccentric loading. (ACI 318-14, 17.4.2.4)

$$\psi_{ec_N} := \begin{cases} \left[\dfrac{1}{\left[1+\left(2\cdot\dfrac{e_N}{3\cdot h_{ef}}\right)\right]}\right] & \text{if } \dfrac{1}{\left[1+\left(2\cdot\dfrac{e_N}{3\cdot h_{ef}}\right)\right]} \le 1.0 \\ 1.0 & \text{otherwise} \end{cases} = 1.0$$

$$\psi_{ed_N} := \begin{cases} 1 & \text{if } c_{a_min} \ge 1.5\cdot h_{ef} \\ 0.7 + 0.3\cdot\dfrac{c_{a_min}}{1.5\cdot h_{ef}} & \text{otherwise} \end{cases} = 1.0$$

Modification factor for edge effects. (ACI 318-14, 17.4.2.5)

$\psi_{c_N} := 1.25$ — Cracked concrete pullout factor for cast-in anchors. (ACI 318-14, Section 17.4.2.6)

$\psi_{cp_N} := 1.0$ — Uncracked concrete pullout factor for cast-in anchors. (ACI 318-14, 17.4.2.7)

$A_{Nco} := 9\cdot h_{ef}^2 = 310.7\cdot in^2$ — Projected concrete failure area of a single anchor with an edge distance equal to or greater than 1.5 x h_{ef}. (ACI 318, 17.4.2.1)

$k_c := 24$ — Effectiveness factor for cracked concrete. (ACI 318-14, Section 17.4.2.2)

$N_b := k_c\cdot\lambda\cdot\sqrt{\frac{f_c}{psi}}\cdot\left(\frac{h_{ef}}{in}\right)^{1.5} lbf = 22929\,lbf$ — Basic concrete breakout strength of a single anchor in tension in cracked concrete. (ACI 318, Section 17.4.2.2)

$A_{Nc} := \left(1.5\cdot h_{ef} + s_{wsEW} + 1.5\cdot h_{ef}\right)\cdot 2\cdot 1.5\cdot h_{ef} = 416.5\cdot in^2$ — Projected surface area for two studs. (PCI, Section 6.5.4.1 and ACI 318-14, Section 17.4.2.1)

$N_{cb} := \frac{A_{Nc}}{A_{Nco}}\cdot\psi_{ec_N}\cdot\psi_{ed_N}\cdot\psi_{c_N}\cdot\psi_{cp_N}\cdot N_b = 38.42\cdot kip$ — Concrete breakout strength of the anchorage in tension. (ACI 318, Section 17.4.2.1)

$\phi_{t_c} := 0.70$ — Strength reduction factor for concrete failure in tension. (ACI 318, Section 17.3.3)

$\phi N_{cb} := \phi_{t_c}\cdot N_{cb} = 26892\,lbf$ — Tensile breakout strength incorporating strength reduction factors.

Concrete Pullout Strength (Tension)

$A_{brg} := 0.92in^2$ — Nominal area of the headed stud shank. (H-14-111609 and PCI, Table 6.5.1.2)

$C_{crp} := 0.7$ — Cracking coefficient. Conservatively use the cracked concrete factor. (PCI, Section 6.5.4.2)

$N_{pn} := 8 \frac{A_{brg}}{in^2} \cdot \frac{f_c}{psi} \cdot lbf = 33120\ lbf$ — Nominal pullout strength. (ACI 318-14, Section 17.4.3.4 and similar to PCI, eq 6.5.4.5 [11.2*0.7=7.84 vs 8])

$\psi_{c_P} := 1.0$ — Cracked concrete pullout factor. Conservatively assume cracked concrete. (ACI 318-14, Section 17.4.2.6)

$\phi_c := 0.70$ — Concrete strength reduction factor (tension or shear). Conservatively use factor for when confinement reinforcement is not present. (PCI, Section 6.5.3.4 and ACI 318-14, Section 17.3.3)

$\phi N_{pn} := \phi_c \cdot \psi_{c_P} \cdot N_{pn} = 23184\ lbf$ — Design tensile strength of the an anchor based upon concrete pullout capacity. (PCI, Section 6.5.4)

Side Face Blowout Strength (Tension)

Side face blowout is not a concern since the anchors will not be located close to an edge.

Concrete Shear Strength

The concrete shear strength is highly dependent upon the distance from the edge of concrete (see PCI, Section 6.5.5). Since the edge distances are so great (4' plus) concrete breakout strength in shear will not govern over the steel shear strength. Therefore, the concrete breakout strength will not be analyzed further. Note that pryout is not a concern since short, stocky studs are not used ($h_{ef}/d_o > 4.5$) and since the concrete is normal weight (see PCI, Section 6.5.7).

$d_o := \frac{5}{8} in$ — Shank diameter of stud. (H-14-111609)

$\frac{h_{ef}}{d_o} = 9.4$ — Embedment depth to shank diameter ratio.

Concrete Combined Strength

Ductile failure (stud material) is preferred. (See PCI, Section 6.5)

$$\text{Govern} := \begin{cases} \text{"Ductile Failure"} & \text{if } \phi N_s \cdot n_{stud} < \min(\phi N_{cb}, \phi N_{pn} \cdot n_{stud}) \\ \text{"Brittle failure."} & \text{otherwise} \end{cases} = \text{"Ductile Failure"}$$

$\phi N_{gov} := \min(\phi N_s \cdot 2, \phi N_{cb}, \phi N_{pn} \cdot 2) = 26892\ \text{lbf}$ Governing design strength of two anchors in tension.

$\phi V_{gov} := \phi V_s \cdot 2 = 28210\ \text{lbf}$ Governing design strength of two anchors in shear.

$$DCR_{stud} := \begin{cases} \dfrac{T_{stud}}{\phi N_{gov}} & \text{if } \dfrac{V_{stud}}{\phi V_{gov}} \le 0.20 \wedge \dfrac{T_{stud}}{\phi N_{gov}} > 0.20 \\ \dfrac{V_{stud}}{\phi V_{gov}} & \text{if } \dfrac{T_{stud}}{\phi N_{gov}} \le 0.20 \wedge \dfrac{V_{stud}}{\phi V_{gov}} > 0.20 \\ \max\left(\dfrac{T_{stud}}{\phi N_{gov}}, \dfrac{V_{stud}}{\phi V_{gov}}\right) & \text{if } \dfrac{V_{stud}}{\phi V_{gov}} \le 0.20 \wedge \dfrac{T_{stud}}{\phi N_{gov}} \le 0.20 \\ \dfrac{\dfrac{T_{stud}}{\phi N_{gov}} + \dfrac{V_{stud}}{\phi V_{gov}}}{1.2} & \text{otherwise} \end{cases} = 0.63$$

Embeded Plate

$t_p := 1\frac{1}{4}\text{in}$ Thickness of plate. (H-14-111609)

$t_{p_min} := \dfrac{d_o}{2} = 0.31 \cdot \text{in}$ Minimum plate thickness. (PCI, Section 6.5.1.1)

$DCR_{pl} := \dfrac{t_{p_min}}{t_p} = 0.25$ DCR is less than 1.0; therefore, **OK**.

APPENDIX A

STRUCTURAL ANALYSIS OF TSCR IXC STORAGE PAD – FEA

Contents

A1.0 PURPOSE 43
A2.0 METHODOLOGY 43
A3.0 DESIGN INPUTS 47
A3.1 Material Properties 47
A3.1.1 Concrete Properties: 47
A3.1.2 Rebar Properties 48
A3.1.3 Soil Properties 48
A3.1.4 IXC-150 Properties 48
A3.2 Seismic Response Spectra 49
A4.0 ASSUMPTIONS NOT REQUIRING VERIFICATION 50
A5.0 COMPUTER SOFTWARE 50
A6.0 RESULTS 50
A6.1 Modal Analysis 50
A6.2 IXC Pad Analysis 51
A6.2.1 Concrete Results 51
A6.2.2 Rebar Results 52

Figures

Figure A-1: Finite Element Model 44
Figure A-2: Finite Element Model of Rebar 45
Figure A-3 Finite Element Model Soil Constraints 46
Figure A-4 IXC-150 Modal Analysis Finite Element Model 47
Figure A-5 Spectral Acceleration 49
Figure A-6 Modal Analysis Results 51

Tables

Table A-1: Modal Frequencies and Participating Mass % 50
Table A-2: Concrete Width Cross Section Forces and Moments 52
Table A-3: Concrete Minimum and Maximum Stresses 52
Table A-4: Rebar Minimum and Maximum Stresses 52

A1.0 PURPOSE

The purpose of this attachment is to document a detailed finite element analysis of the Tank Side Cesium Removal (TSCR) Ion Exchange Column (IXC) Storage Pad. The analysis included response spectrum seismic accelerations and soil interactions to develop the moments across the width of the pad as well as the stresses in the rebar and concrete.

A2.0 METHODOLOGY

ANSYS software was used to create a finite element analysis model of the storage pad, the soil down to 60 feet below the storage pad, the storage pad embeds, as well as cylinders that represent the IXC-150s. Everything was modeled as solids, except for the rebar. The rebar was modeled as links with the appropriate cross section. The mesh is coarser than the spacing of the actual rebar. To properly account for the rebar, the total cross-sectional area of all of the rebar was calculated. This was then divided by the actual number of rebar modeled, to calculate the area used in the finite element model. This calculation was performed inside ANSYS so that if the mesh density changes, the rebar cross section area automatically updates. The different soil layers, as well as the IXC-150s and embeds, were bonded together using bonded contacts. The concrete pad to soil interaction was modeled using contacts that allow sliding and separation.

Four ACI load combinations were analyzed:

9-1, 1.4D
9-3, 1.2D + 1.6S
9-5, 1.2D + 1.0E + 0.2S
9-7, 0.9D + 1.0E

The lateral and vertical earthquake loads are applied simultaneously with gravity and the other loads. Wind loads were neglected because they were small compared to seismic loads.

Figure A-1 shows the general finite element model. The soil layers are modeled as the dark blue, greens, orange, and pink layers. The fill soil is the darker green layer. The dune sand is the orange layer. The upper sand is the pink layer. The lower sand 1 is the lighter green layer. The lower sand 2 is the dark blue layer. The concrete is the lighter blue layer. The embeds are the lightest blue squares. And the IXC-150s are the pink cylinders. Figure A-2 shows the top and bottom rebar layers inside the concrete. Figure A-3 shows the soil constraints. The exposed faces of the soil were constrained in the direction normal to the face.

To determine the seismic accelerations, the IXC-150 model from the drop analysis documented in RPP-CALC-62572 was modified and a modal analysis performed to determine what frequencies excite the IXC-150. The modification was to remove the IXC-150 resin media and increase the weight of the steel and lead to account for the resin media. The resulting lowest natural frequency was used, along with the response spectra, to determine the seismic acceleration. The IXC-150 finite element model is shown in Figure A-4. The stainless steel is shown as purple, the carbon steel is light blue, and the lead is red. Note that this IXC-150 model was not used in the concrete pad model. The IXC-150s in the concrete pad model are simple solid cylinders with the proper mass. Their only purpose is to put the correct loads into the concrete. The model consists of 150 IXCs.

However, the storage pad may contain up to 160 IXC. The worst case forces, moments and stresses reported in Section A6.2 will not increase by placing the additional IXCs on the pad and the worst case results reported in Section A6.2 are considered applicable to the 160 IXC configuration.

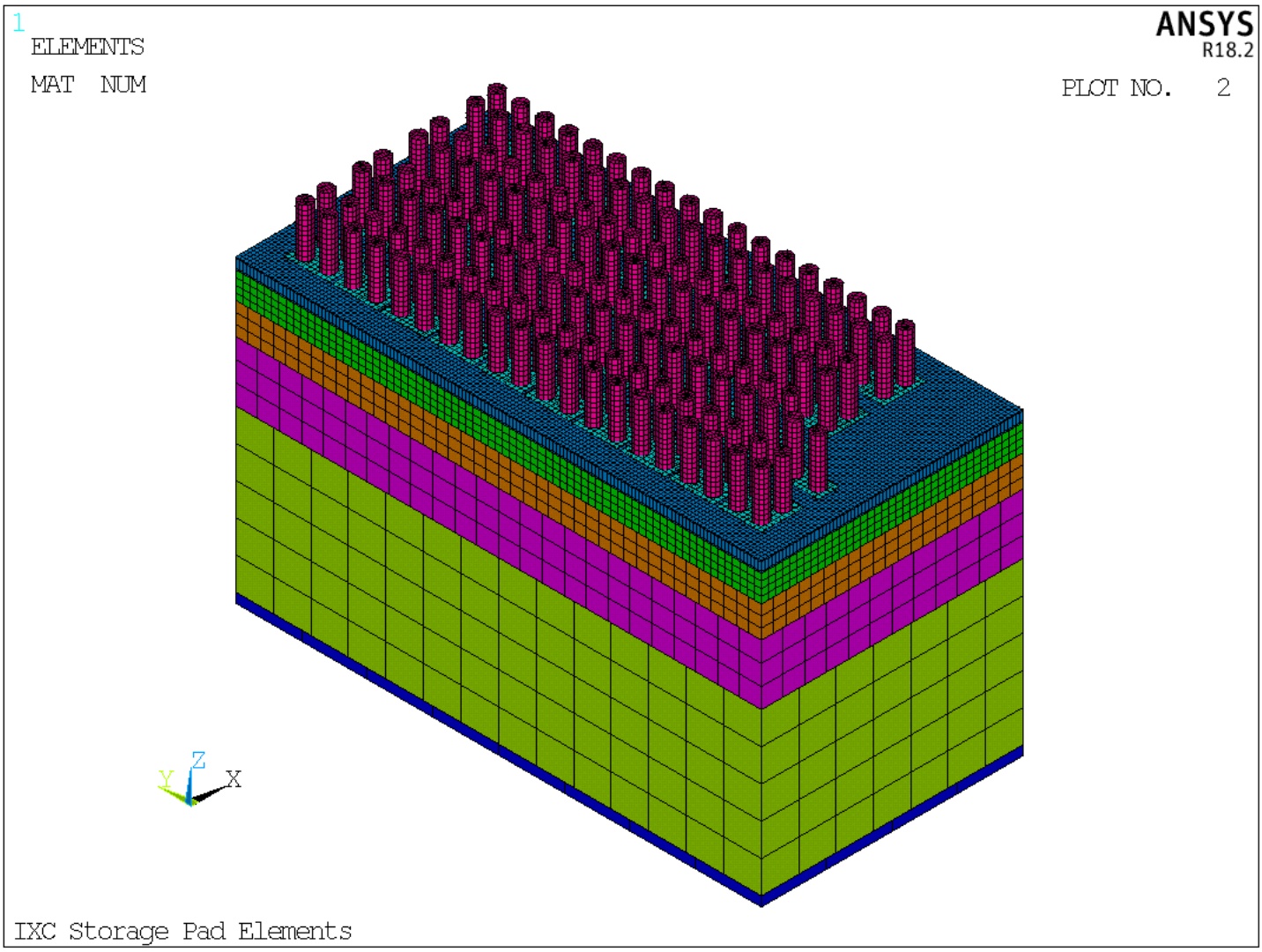

Figure A-1: Finite Element Model

CALCULATION SHEET

Project No. S78918.001	Calculation No. 078908.18.01-S-001	Rev. 0	Page No. 45 of 68
Title: Structural Analysis of TSCR IXC Storage Pad			
Prepared By: JR Martin	Date: 9-16-2019	Checked By: CM Conselman	Date: 9-16-2019

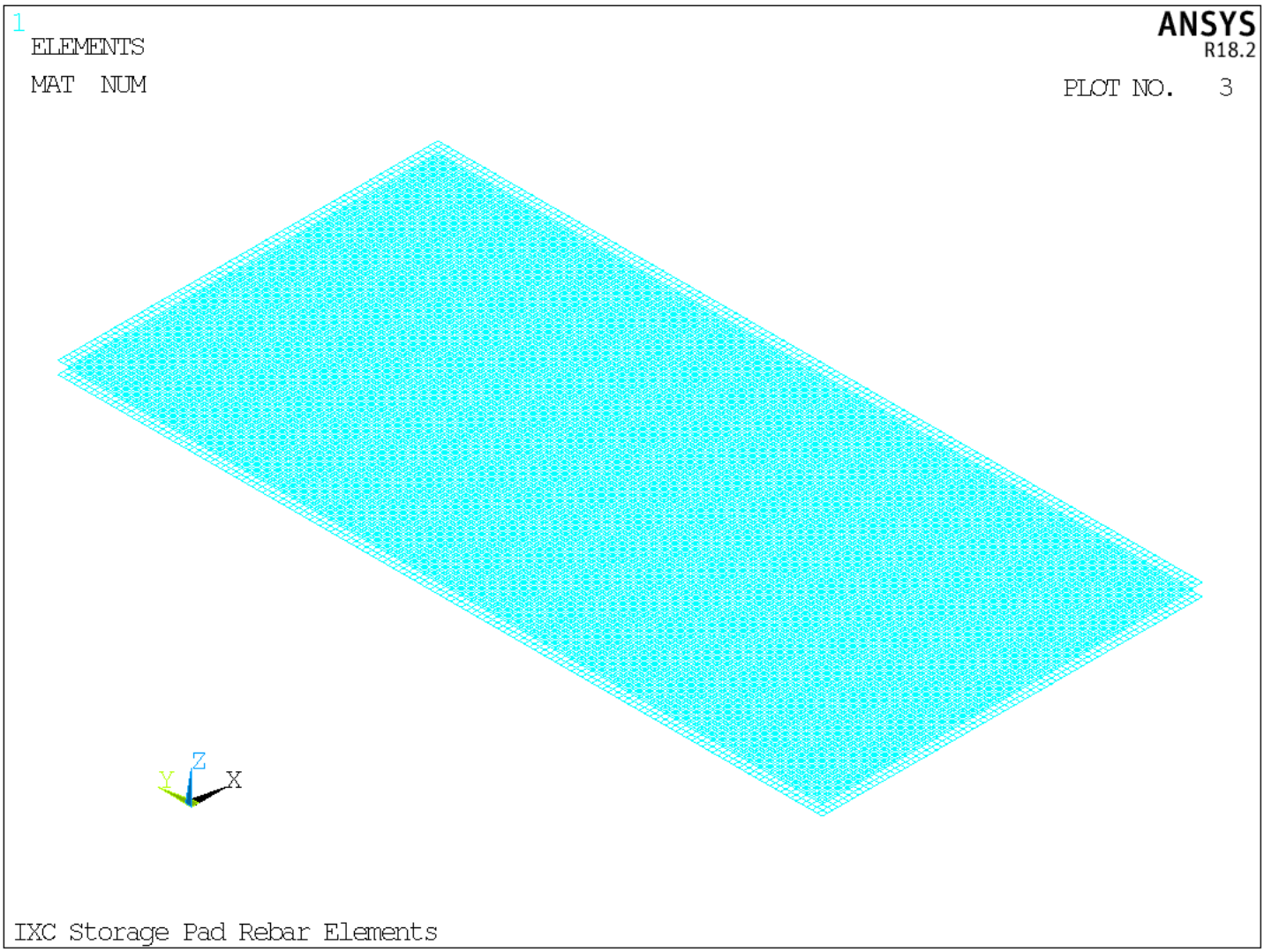

Figure A-2: Finite Element Model of Rebar

CALCULATION SHEET

Project No. S78918.001	Calculation No. 078908.18.01-S-001	Rev. 0	Page No. 46 of 68
Title: Structural Analysis of TSCR IXC Storage Pad			
Prepared By: JR Martin	Date: 9-16-2019	Checked By: CM Conselman	Date: 9-16-2019

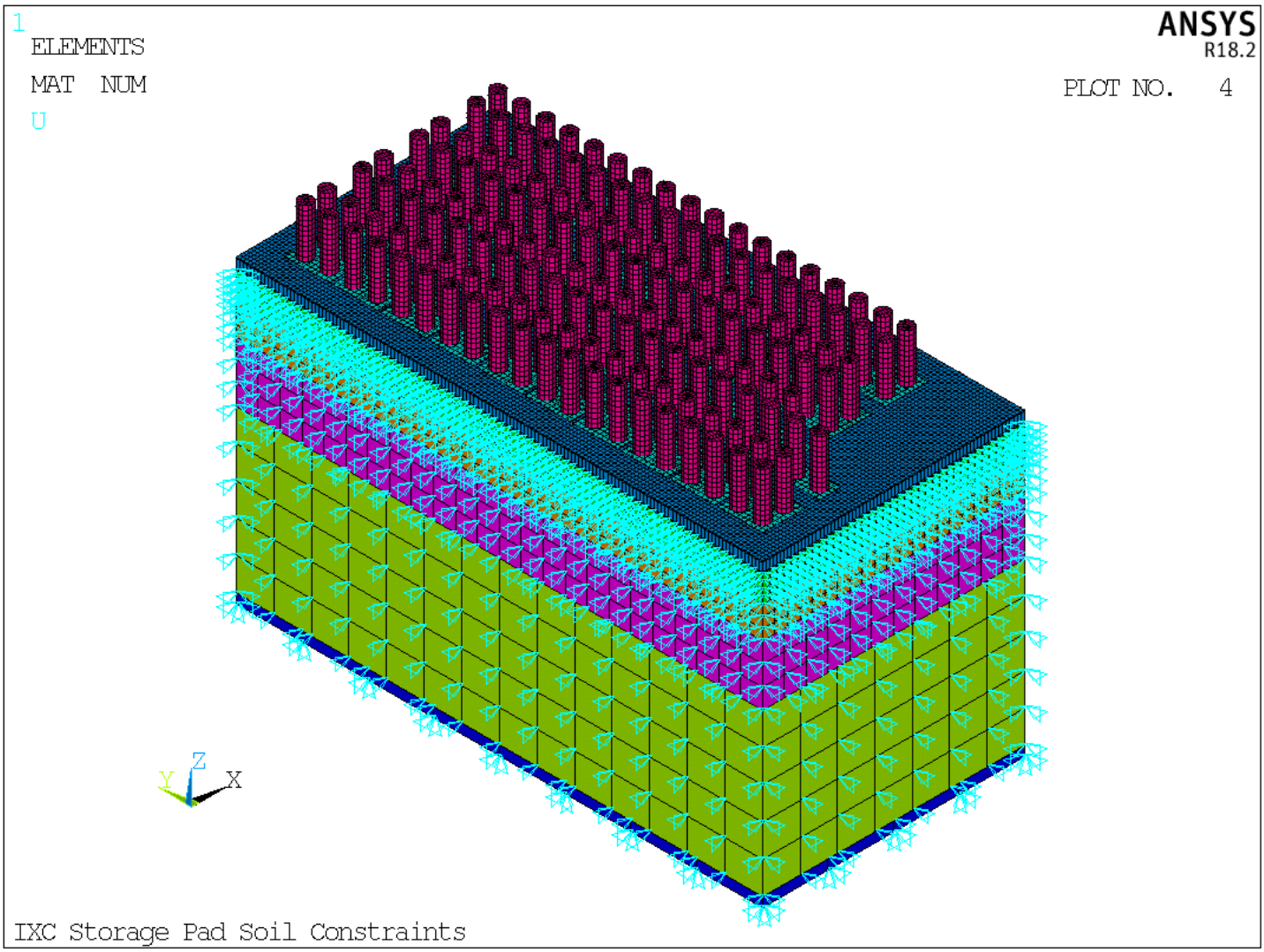

Figure A-3: Finite Element Model Soil Constraints

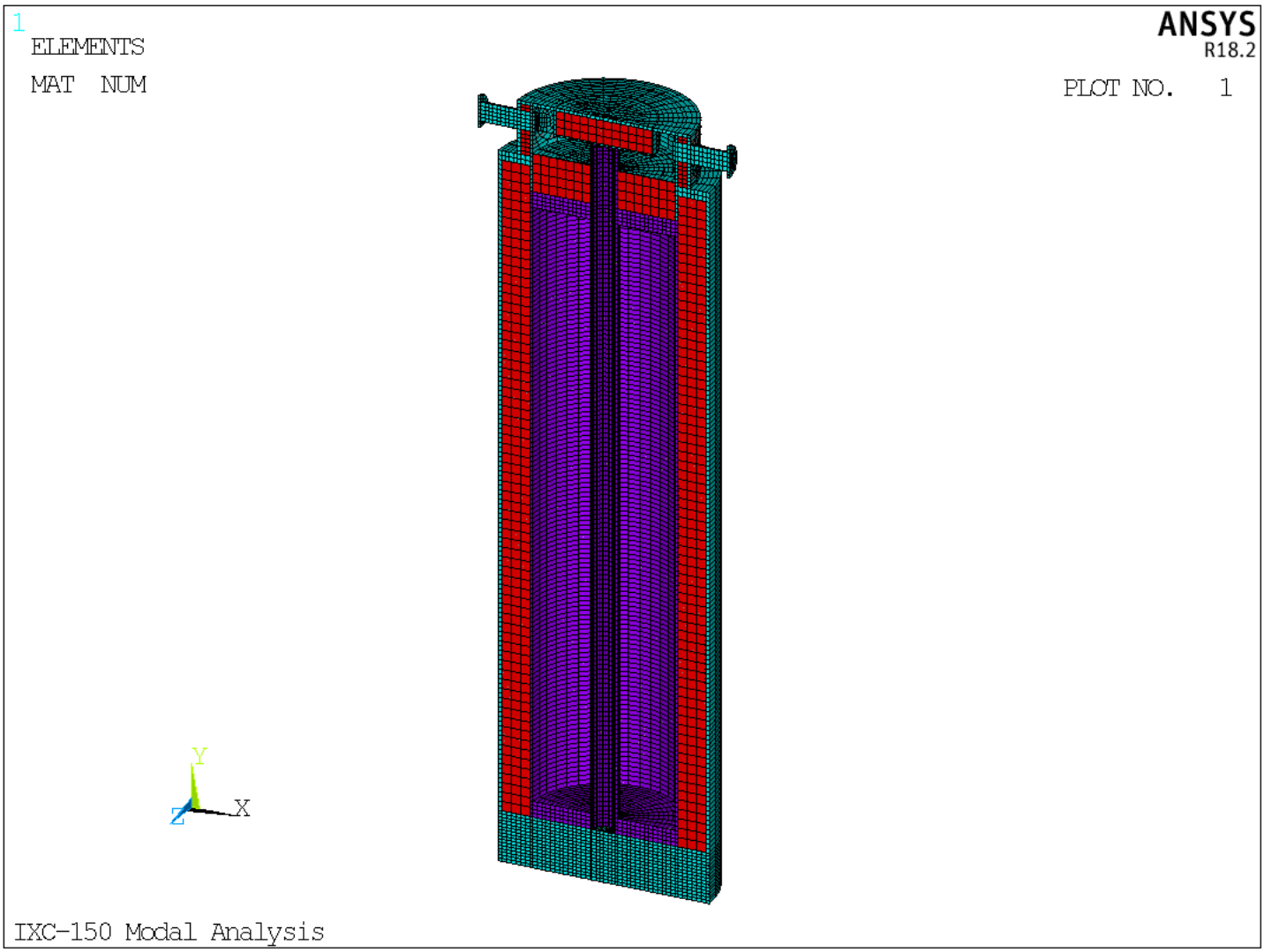

Figure A-4: IXC-150 Modal Analysis Finite Element Model

A3.0 DESIGN INPUTS

A3.1 Material Properties

A3.1.1 Concrete Properties:

- Density = 150 lb/ft^3, from ACI 14th Ed., Table 17-12
- Young's Modulus = $W_c^{1.5}$ 33 sqrt(f_c') = 150$^{1.5}$ 33 sqrt(4500) = 4.067e6 psi, from ACI 318-14, 19.2.2.1
- Poisson's Ratio = 0.15, from Marks Standard Handbook for Mechanical Engineers, 10th Ed, 5-15
- Compressive Strength = 4500 psi, from RPP-SPEC-62663
- Modulus of Rupture = 7.5 λ sqrt(f_c') = 7.5 (1) sqrt(4500) = 503 psi, from ACI 318-11, 19.2.3.1

A3.1.2 Rebar Properties

- Density = 490 lb/ft^3, from AISC 360 Table 17-12
- Young's Modulus = 29e6 psi, from ACI 318-11, 20.2.2.2
- Poisson's Ratio = 0.3, from AISC 360 Index Page 7

A3.1.3 Soil Properties

The following soil properties were taken from the Geotechnical Engineering Report by Shannon & Wilson (RPP-RPT-61401), Exhibit 6-1 and Exhibit F-2.

A3.1.3.1 Fill Soil Properties

- Density = 122 lb/ft^3
- Young's Modulus = 4.2e6 psi
- Poisson's Ratio = 0.15

A3.1.3.2 Dune Sand Soil Properties

- Density = 117 lb/ft^3
- Young's Modulus = 2.4e6 psi
- Poisson's Ratio = 0.15

A3.1.3.3 Upper Sand Soil Properties

- Density = 124 lb/ft^3
- Young's Modulus = 8.1e6 psi
- Poisson's Ratio = 0.15

A3.1.3.4 Lower Sand 1 Soil Properties

- Density = 133 lb/ft^3
- Young's Modulus = 18e6 psi
- Poisson's Ratio = 0.15

A3.1.3.5 Lower Sand 2 Soil Properties

- Density = 132 lb/ft^3
- Young's Modulus = 24e6 psi
- Poisson's Ratio = 0.15

A3.1.4 IXC-150 Properties

- Weight = 26,763 lbs, from Attachment 2

CALCULATION SHEET

Project No. S78918.001	Calculation No. 078908.18.01-S-001	Rev. 0	Page No. 49 of 68
Title: Structural Analysis of TSCR IXC Storage Pad			
Prepared By: JR Martin	Date: 9-16-2019	Checked By: CM Conselman	Date: 9-16-2019

A3.2 Seismic Response Spectra

The following response spectral accelerations are taken from WRPSH-DRS-004, Rev 0 (see Attachment 4), Development of DRS and Foundation Input Response Spectra.

Development of DRS and FIRS *Calc. No. WRPSH-DRS-004 Rev 0*
Amec Foster Wheeler Project No. 8517190880 *July 12, 2018*

Table 11: Surface DRS for the AN and AW DST Sites

Frequency (Hz)	Spectral Acceleration (g) for Damping of:						
	0.5%	2%	3%	4%	5%	7%	10%
Horizontal Motion							
100	0.1143	0.1143	0.1143	0.1143	0.1143	0.1143	0.1142
50	0.1385	0.1364	0.1359	0.1356	0.1353	0.1350	0.1346
33.3	0.1650	0.1545	0.1520	0.1505	0.1493	0.1477	0.1462
25	0.1991	0.1755	0.1700	0.1665	0.1639	0.1605	0.1571
20	0.2363	0.1975	0.1886	0.1828	0.1786	0.1729	0.1673
13.3	0.3340	0.2553	0.2367	0.2245	0.2152	0.2030	0.1905
10	0.4221	0.3127	0.2849	0.2662	0.2518	0.2326	0.2129
9.26	0.4459	0.3295	0.2994	0.2791	0.2635	0.2425	0.2209
6.13	0.5045	0.3694	0.3315	0.3056	0.2858	0.2580	0.2298
5	0.5069	0.3732	0.3339	0.3067	0.2858	0.2564	0.2265
3.33	0.4929	0.3723	0.3339	0.3067	0.2858	0.2555	0.2247
2.5	0.4968	0.3751	0.3355	0.3074	0.2858	0.2545	0.2227
2	0.5020	0.3774	0.3367	0.3079	0.2858	0.2537	0.2211
1.23	0.4990	0.3778	0.3371	0.3082	0.2858	0.2533	0.2203
1.00	0.4157	0.3117	0.2769	0.2522	0.2332	0.2057	0.1779
0.67	0.2835	0.2103	0.1860	0.1688	0.1554	0.1365	0.1173
0.5	0.2164	0.1596	0.1404	0.1269	0.1166	0.1015	0.0865
0.33	0.1487	0.1092	0.0952	0.0853	0.0777	0.0669	0.0561
0.2	0.0852	0.0657	0.0574	0.0513	0.0466	0.0396	0.0327
0.13	0.0522	0.0430	0.0378	0.0339	0.0311	0.0261	0.0215
0.1	0.0340	0.0300	0.0272	0.0250	0.0233	0.0203	0.0174
Vertical Motion							
100	0.0630	0.0630	0.0630	0.0630	0.0630	0.0629	0.0629
50	0.0792	0.0765	0.0758	0.0753	0.0749	0.0744	0.0738
33.3	0.1223	0.1037	0.0993	0.0964	0.0942	0.0913	0.0883
25	0.1758	0.1359	0.1265	0.1203	0.1157	0.1095	0.1033
20	0.2386	0.1711	0.1552	0.1448	0.1370	0.1266	0.1162
13.3	0.3366	0.2322	0.2060	0.1887	0.1758	0.1580	0.1404
10	0.3415	0.2342	0.2061	0.1874	0.1734	0.1538	0.1346
9.26	0.3409	0.2343	0.2061	0.1873	0.1732	0.1535	0.1342
6.13	0.2877	0.2005	0.1765	0.1602	0.1479	0.1307	0.1137
5	0.2553	0.1804	0.1592	0.1448	0.1338	0.1185	0.1033
3.33	0.2206	0.1612	0.1432	0.1308	0.1213	0.1077	0.0940
2.5	0.2033	0.1502	0.1336	0.1220	0.1132	0.1004	0.0875
2	0.1930	0.1426	0.1268	0.1158	0.1073	0.0952	0.0829
1.23	0.1692	0.1266	0.1128	0.1030	0.0953	0.0845	0.0735
1.00	0.1481	0.1093	0.0969	0.0882	0.0814	0.0720	0.0624
0.67	0.1103	0.0821	0.0727	0.0660	0.0608	0.0535	0.0460
0.5	0.0897	0.0670	0.0593	0.0539	0.0497	0.0436	0.0376
0.33	0.0722	0.0562	0.0498	0.0451	0.0416	0.0361	0.0306
0.2	0.0482	0.0400	0.0358	0.0325	0.0300	0.0259	0.0219
0.13	0.0371	0.0314	0.0280	0.0255	0.0235	0.0203	0.0170
0.1	0.0263	0.0234	0.0213	0.0197	0.0184	0.0162	0.0140

Figure A-5: Spectral Acceleration

A4.0 ASSUMPTIONS NOT REQUIRING VERIFICATION

1) The soil is assumed to be perfectly elastic.

2) The sloshing of the IXC-150 media is assumed to have negligible effects upon the seismic response of the IXC-150 during a seismic event.

A5.0 COMPUTER SOFTWARE

The following software is used in this calculation:

ANSYS®[4] Mechanical Release 18.2 was used for the finite element analysis. The ANSYS program is verified by ARES Corporation, as documented in Verification No. VV-18-02-067. This verification was performed on an ARES computer (Computer ID: RL_D_C0361 / 488LXK2) which is a DELL Precision T3620 running Microsoft Windows 10 Professional x64 Edition. The finite element analysis for final numeric revisions will be run on the ARES verified computer. Input and output files are not included in this calculation but are available in SmartPlant as independent files.

No unverified computer software was used in this analysis.

A6.0 RESULTS

A6.1 Modal Analysis

The lowest natural response frequency from the modal analysis was 29.8 hz, as shown in Figure A-6. This is primarily a horizontal response. Taking this natural frequency for both vertical and horizontal natural frequencies and plugging into the 5% damping seismic response spectra curves of Figure A-5 gives a horizontal acceleration of 0.16g and a vertical seismic acceleration of 0.1g. Per Waiver #271, the maximum credible earthquake (conservative since MCE is not required) is 1.5 times the design response spectra, which gives a horizontal acceleration of 0.24g and a vertical acceleration of 0.15g, which is what was used for seismic accelerations in the IXC-150 concrete pad analysis. Table A-1 summarizes the modes, their frequencies, and their participating mass % in the lateral and vertical directions.

Table A-1: Modal Frequencies and Participating Mass %

Mode	Frequency	Lateral Mass %	Vertical Mass %
1	29.7949	0.613	0.000
2	103.969	0.003	0.000
3	125.354	0.229	0.000
4	152.146	0.000	0.774
5	152.752	0.000	0.000
Sum		0.845	0.774

[4] ANSYS is a registered trademark of ANSYS Inc.

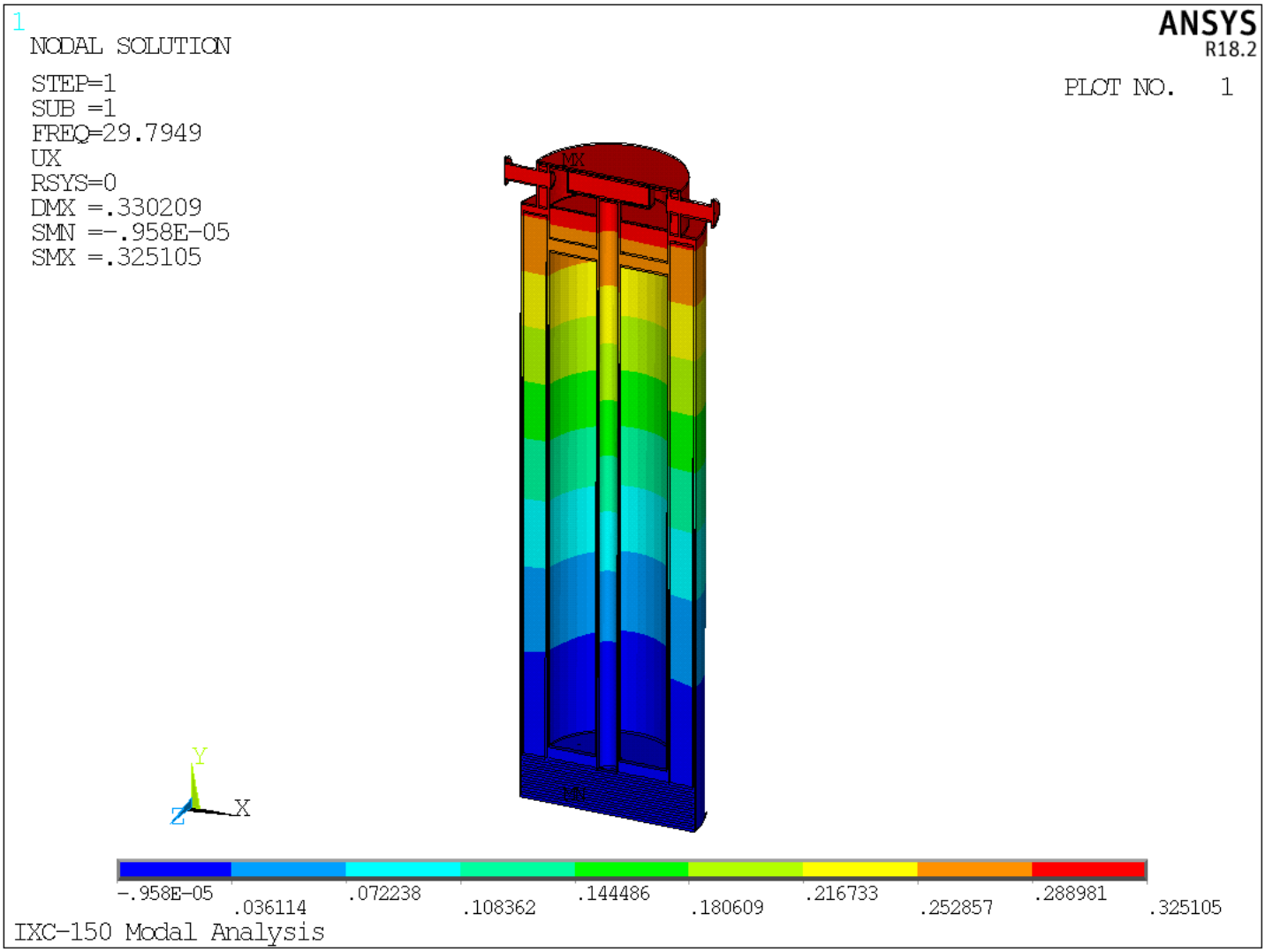

Figure A-6: Modal Analysis Results

A6.2 IXC Pad Analysis

A6.2.1 Concrete Results

The forces and moments were summed up across the cross section of the width of the concrete pad. This was repeated along the length of the concrete pad. The maximums are summarized in Table A-2.

Table A-2: Concrete Width Cross Section Forces and Moments

Load Case	Axial Force (kips)	Horizontal Shear Force (kips)	Vertical Shear Force (kips)	Bending Moment (kip ft)
1	244.2	26.8	70	111.5
3	206.1	22.9	61.1	95.1
5	334.5	42.3	90.6	167.1
7	286.9	34.3	80.4	143.7

The maximum stress for all the concrete elements were extracted and are shown in Table A-3. The negative numbers are compression. The positive numbers are tension.

Table A-3: Concrete Minimum and Maximum Stresses

Load Case	Min Stress (psi)	Max Stress (psi)
1	-105.46	124.2083
3	-91.8378	106.6444
5	-146.136	135.5167
7	-129.591	108.9614

A6.2.2 Rebar Results

The maximum stress for all the rebar elements were extracted and are shown in Table A-4. The negative numbers are compression. The positive numbers are tension.

Table A-4: Rebar Minimum and Maximum Stresses

Load Case	Min Stress (psi)	Max Stress (psi)
1	-328.008	778.7227
3	-282.621	660.0183
5	-497.519	861.9764
7	-439.873	703.1169

CALCULATION SHEET

Project No. S78918.001	Calculation No. 078908.18.01-S-001	Rev. 0	Page No. 53 of 68
Title: Structural Analysis of TSCR IXC Storage Pad			
Prepared By: JR Martin	Date: 9-16-2019	Checked By: CM Conselman	Date: 9-16-2019

ATTACHMENT 1

KALMAR FORKLIFT DATA – DCG160-12T

CALCULATION SHEET

Project No. S78918.001	Calculation No. 078908.18.01-S-001	Rev. 0	Page No. 54 of 68
Title: Structural Analysis of TSCR IXC Storage Pad			
Prepared By: JR Martin	Date: 9-16-2019	Checked By: CM Conselman	Date: 9-16-2019

MAIN DATA	Model designation		DCG 90-6	DCG 100-6	DCG 120-6	DCG 127-6	DCG 140-6	DCG 150-6	DCG 100-12	DCG 120-12	DCG 150-12	DCG 160-6	DCG 160-9	DCG 160-12
			DCG 90-6	DCG 100-6	DCG 120-6	DCG 127-6	DCG 140-6	DCG 150-6	DCG 100-12	DCG 120-12	DCG 150-12	DCG 160-8	DCG 160-9	DCG 160-12
	Power source		Diesel	Diesel	Diesel	Diesel	Diesel	Diesel	Diesel	Diesel	Diesel	Diesel	Diesel	Diesel
	Rated capacity / rated load	kg	9000	10000	12000	12700	14000	15000	10000	12000	15000	16000	16000	16000
	Load center distance	mm L4	600	600	600	600	600	600	1200	1200	1200	600	900	1200
	Load distance, center of drive axle to fork	mm L2	895	895	900	900	910	980	990	990	1000	980	990	1000
	Wheelbase	mm L3	2800	3000	3000	3000	3250	3250	3250	3500	3500	3500	3500	3750
WEIGHTS	Service weight	kg	15200	15800	16200	16700	16900	19800	18600	19700	22300	19200	21200	22400
	Axle loading, loaded front	kg	7800	8100	8300	8300	8400	10300	10000	10100	10200	10200	10200	10500
	Axle loading, loaded rear	kg	21700	23100	26500	27350	28900	32650	26700	29600	34600	34800	34800	35800
	Axle loading, unloaded front	kg	7400	7500	7900	8400	8500	9500	8600	9600	12000	9200	11000	11900
	Axle loading, unloaded rear	kg	2500	2500	1900	2050	2000	2150	1900	2100	2600	2400	2400	2600
WHEELS	Type, front / rear		Pneumatic / Pneumatic											
	Tyre size, front	inch	11,00x20/16PR						12,00x20/20PR					
	Tyre size, rear	inch	11,00x20/16PR						12,00x20/20PR					
	Number of wheels, front / rear (x = driven wheels)		4x / 2	4x / 2	4x / 2	4x / 2	4x / 2	4x / 2	4x / 2	4x / 2	4x / 2	4x / 2	4x / 2	4x / 2
	Track width, front / rear	mm s	1840 / 1960	1840 / 1960	1840 / 1960	1855 / 1960	1855 / 1960	1855 / 1960	1855 / 1960	1855 / 1960	1855 / 1960	1855 / 1960	1855 / 1960	1855 / 1960
	Tyre pressure	MPa	0,9	0,9	0,9	0,9	0,9	0,9	0,9	0,9	0,9	0,9	1,0	1,0

CALCULATION SHEET

Project No. S78918.001	Calculation No. 078908.18.01-S-001	Rev. 0	Page No. 55 of 68
Title: Structural Analysis of TSCR IXC Storage Pad			
Prepared By: JR Martin	Date: 9-16-2019	Checked By: CM Conselman	Date: 9-16-2019

ATTACHMENT 2

GENERAL ARRANGEMENT OF THE IXC – DRAWING NO. 1813-3010

RPP-CALC-62547, Rev. 0

Sargent & Lundy Engineering Services, Inc.

CALCULATION SHEET

Project No. 078918.18.01	Calculation No. 078908.18.01-S-001	Rev. 0	Page No. 56 of 68
Title: Structural Analysis of TSCR IXC Storage Pad			
Prepared By: JR Martin	Date: 9-16-2019	Checked By: CM Conselman	Date: 9-16-2019

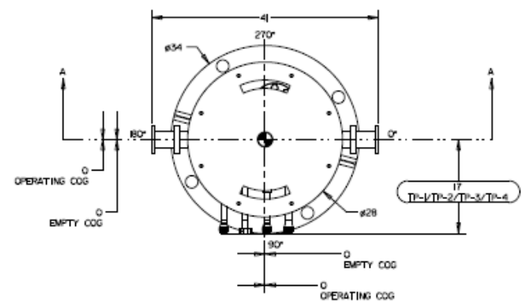

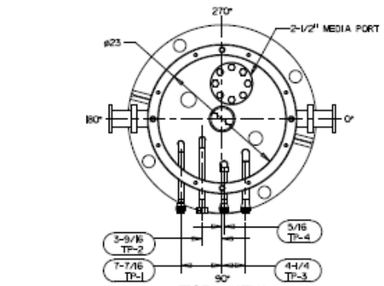

NOTES:
1. EMPTY WEIGHT: 24,346 LBS
2. OPERATING WEIGHT: 26,790 LBS
3. COG: CENTER OF GRAVITY
4. ALL DIMENSIONS LISTED TO UTILIZE DEFAULT TOLERANCE TABLE UNLESS OTHERWISE SPECIFIED.

PARTS/MATERIAL LIST

QTY REQD -020	QTY REQD -010	PART/DASH NUMBER	NOMENCLATURE/DESCRIPTION	MATERIAL/REFERENCE	SHEET	ITEM NO.
	X	-010	GENERAL ARRANGEMENT IXC-150	-	1	1
X		-020	ION EXCHANGE COLUMN, 316/316L S.S. WETTED MATERIAL, 304/304L BASE PLATES AND STRUCTURAL MATERIAL, LEAD SHIELDING	SEE DRW. H-14-112255	1	2

INTERFACE CONTROL

TP-#	DESCRIPTION	CONNECTION TYPE	MATERIAL	REFERENCE
TP-1	INLET	1-1/2" NPSM CHEMJOINT CJ WELD SPUD	316/316L S.S.	DRW. H-14-112244
TP-2	OUTLET	1-1/2" NPSM CHEMJOINT CJ WELD ADAPTER	316/316L S.S.	DRW. H-14-112244
TP-3	VENT	1-1/2" NPSM CHEMJOINT CJ WELD SPUD	316/316L S.S.	DRW. H-14-112244
TP-4	SWEEP AIR	1-1/2" NPSM CHEMJOINT CJ WELD SPUD	316/316L S.S.	DRW. H-14-112244

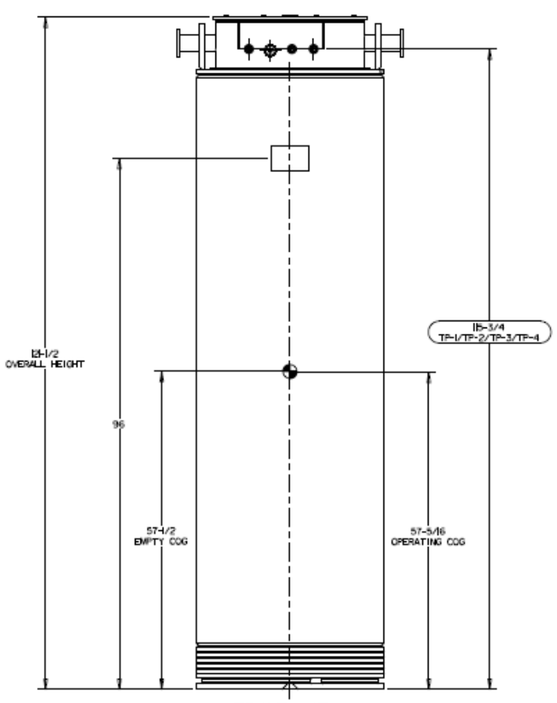

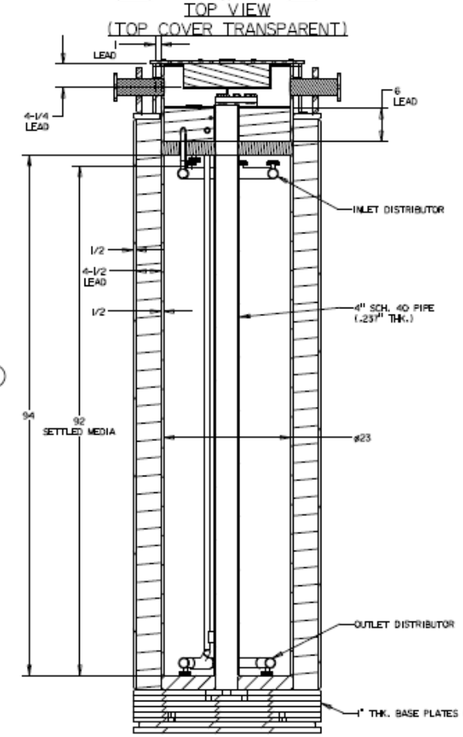

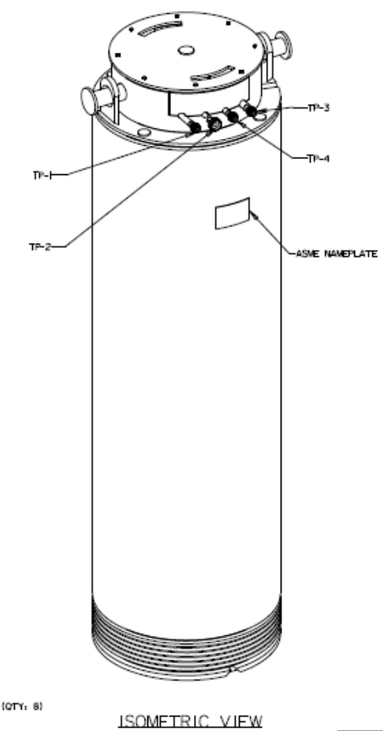

AVANTech INCORPORATED

H-14-112244	GENERAL ARRANGEMENT PROCESS ENCLOSURE EQUIPMENT LAYOUT	RPP-SPEC-6810	SPECIFICATION FOR THE TSCR DEMONSTRATION PROJECT
DWG NUMBER	TITLE	REF NUMBER	TITLE
AVANTECH PROJECT NO.: 18-13	DRAWING TRACEABILITY LIST	NEXT USED ON	REFERENCES

REV	DESCRIPTION	ORIG	CHK	APVD	IDV	DATE
2	INCORPORATED DESIGN CHANGES	RC	CS	CH	-	06/24/19
REV NO.	DESCRIPTION					

REVISIONS

BLDG. NO. PORE55	CAUTION NOT COMPLETE WITHOUT CURRENT CHANGE DOCUMENTS FROM DATABASE	ATTENTION DESTROY THIS DOCUMENT BY SHREDDING MAY CONTAIN SENSITIVE INFORMATION	
	NAME / DATE/COMPANY	U.S. DEPARTMENT OF ENERGY OFFICE OF RIVER PROTECTION	
	DRAWN BY N/A AVT	GENERAL ARRANGEMENT IXC-150	
	DRAFTING APPROVAL N/A AVT		
INDEX NO. 2500	DISCIPLINE ENGINEER N/A AVT		
	DESIGN AUTHORITY N/A AVT	D H-14-111250 T 2	
		SCALE: N/A	

RPP-CALC-62547, Rev. 0

CALCULATION SHEET

Project No. S78918.001	Calculation No. 078908.18.01-S-001	Rev. 0	Page No. 57 of 68
Title: Structural Analysis of TSCR IXC Storage Pad			
Prepared By: JR Martin	Date: 9-16-2019	Checked By: CM Conselman	Date: 9-16-2019

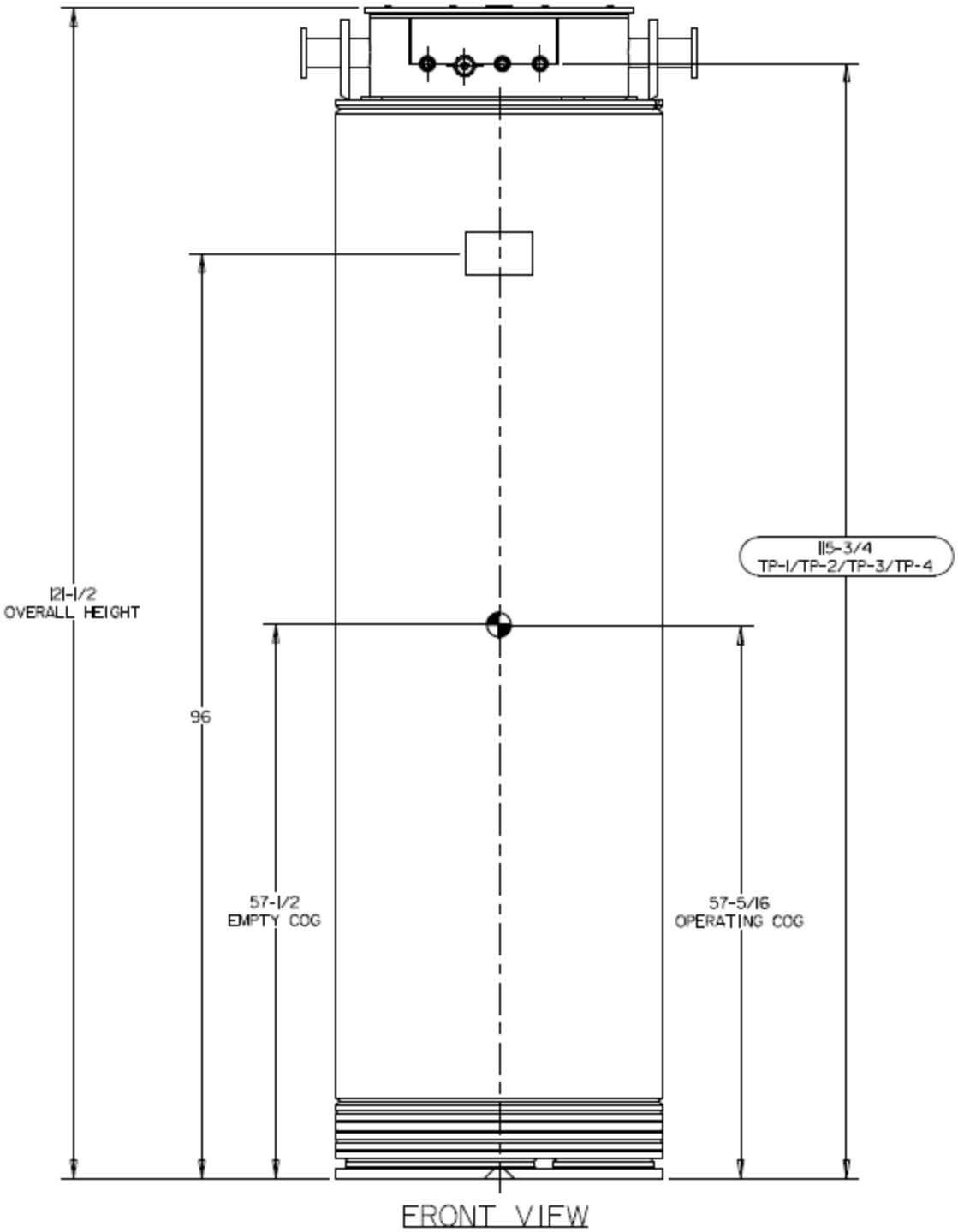

RPP-CALC-62547, Rev. 0

CALCULATION SHEET

Project No. S78918.001	Calculation No. 078908.18.01-S-001	Rev. 0	Page No. 58 of 68
Title: Structural Analysis of TSCR IXC Storage Pad			
Prepared By: JR Martin	Date: 9-16-2019	Checked By: CM Conselman	Date: 9-16-2019

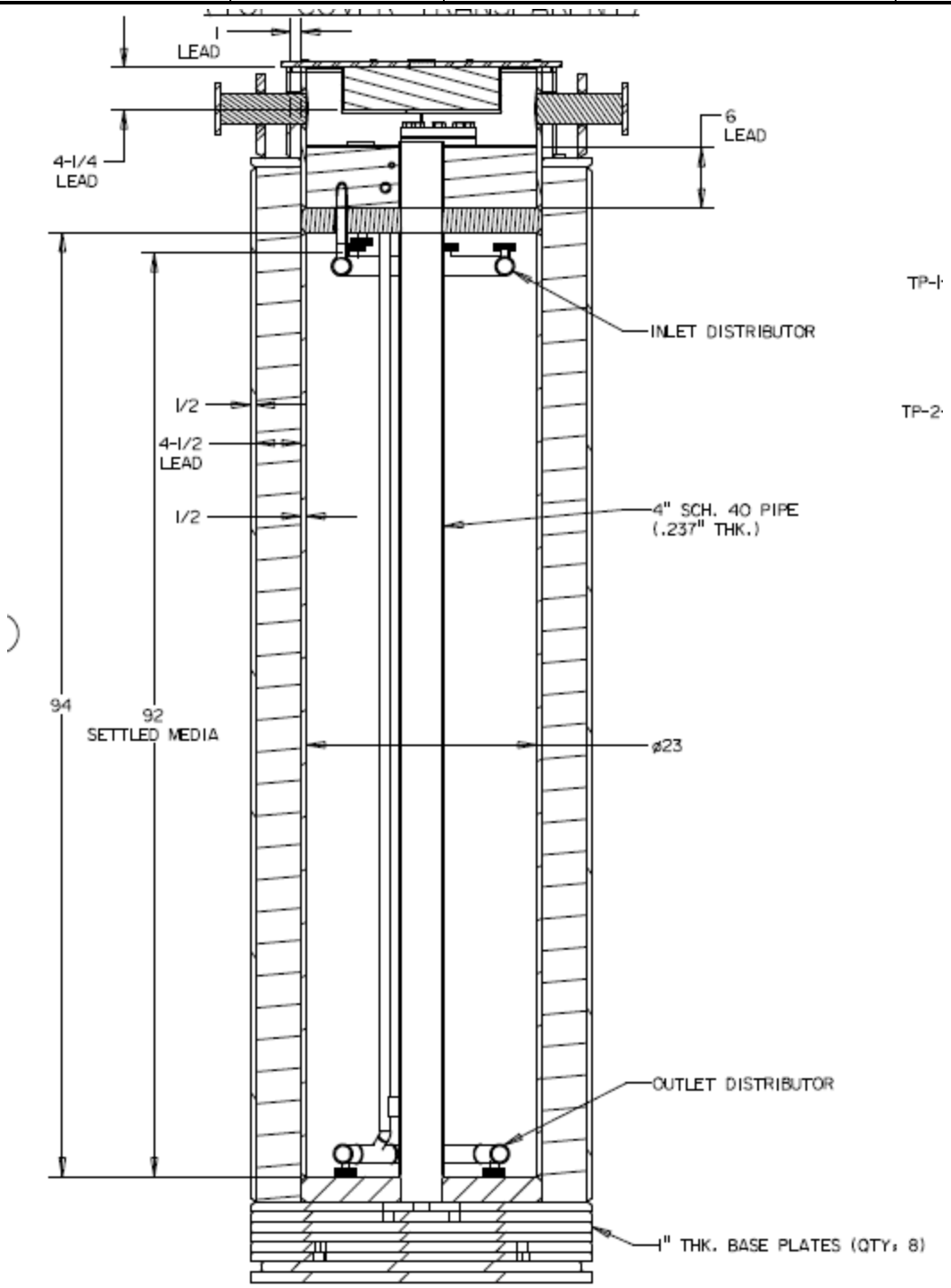

SECTION A-A

CALCULATION SHEET

Project No. S78918.001	Calculation No. 078908.18.01-S-001	Rev. 0	Page No. 59 of 68
Title: Structural Analysis of TSCR IXC Storage Pad			
Prepared By: JR Martin	Date: 9-16-2019	Checked By: CM Conselman	Date: 9-16-2019

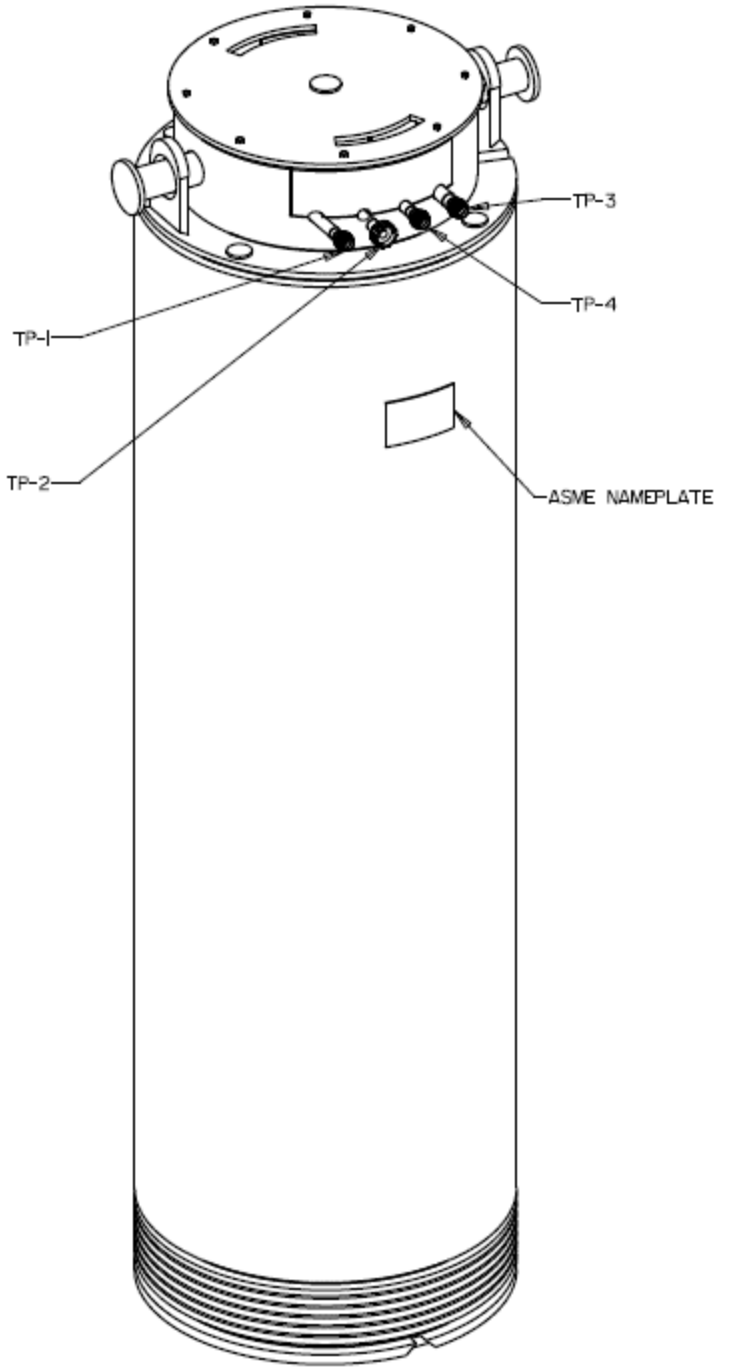

ISOMETRIC VIEW

BLDG. NO.

RPP-CALC-62547, Rev. 0

CALCULATION SHEET

Project No. S78918.001	Calculation No. 078908.18.01-S-001	Rev. 0	Page No. 60 of 68
Title: Structural Analysis of TSCR IXC Storage Pad			
Prepared By: JR Martin	Date: 9-16-2019	Checked By: CM Conselman	Date: 9-16-2019

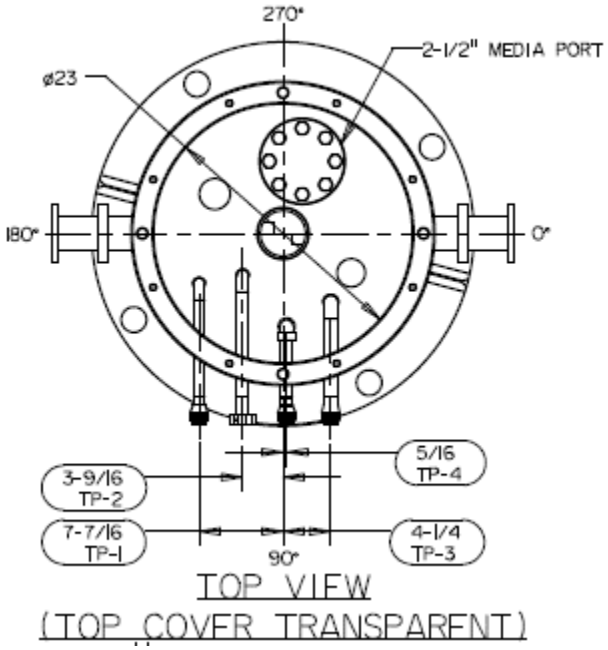

NOTES:
1. EMPTY WEIGHT: 24,346 LBS
2. OPERATING WEIGHT: 26,790 LBS
3. COG: CENTER OF GRAVITY
4. ALL DIMENSIONS LISTED TO UTILIZE DEFAULT TOLERANCE TABLE UNLESS OTHERWISE SPECIFIED.

RPP-CALC-62547, Rev. 0

CALCULATION SHEET

Project No. S78918.001	Calculation No. 078908.18.01-S-001	Rev. 0	Page No. 61 of 68
Title: Structural Analysis of TSCR IXC Storage Pad			
Prepared By: JR Martin	Date: 9-16-2019	Checked By: CM Conselman	Date: 9-16-2019

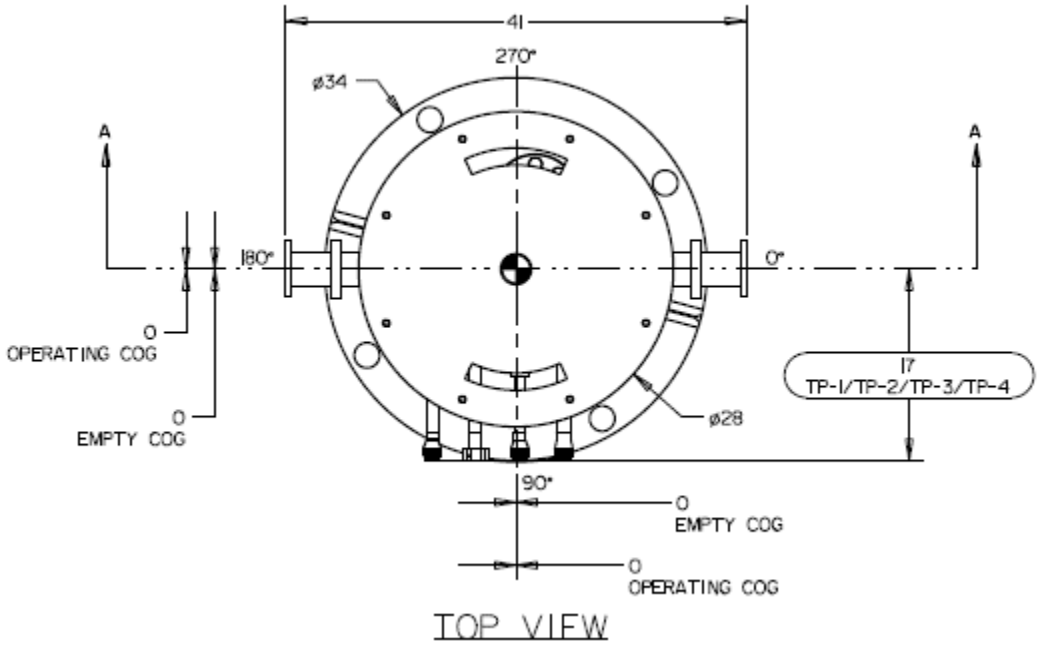

CALCULATION SHEET

Project No. S78918.001	Calculation No. 078908.18.01-S-001	Rev. 0	Page No. 62 of 68
Title: Structural Analysis of TSCR IXC Storage Pad			
Prepared By: JR Martin	Date: 9-16-2019	Checked By: CM Conselman	Date: 9-16-2019

ATTACHMENT 3

NELSON WELD STUD DATA

CALCULATION SHEET

Project No. S78918.001	Calculation No. 078908.18.01-S-001	Rev. 0	Page No. 63 of 68
Title: Structural Analysis of TSCR IXC Storage Pad			
Prepared By: JR Martin	Date: 9-16-2019	Checked By: CM Conselman	Date: 9-16-2019

[redacted] Mechanical Properties

Mechanical Properties – English (Nelson Standard Studs)

Stud Type	Tensile (UTS) (Minimum) (PSI)	Yield (Minimum) (PSI)	Elongation (2") (Minimum)	Reduction of Area (Minimum)
Mild Steel				
CPL, CFL, PFL, MP, MD, CKL, NBL, H4L (1/4 DIA), L2L, R7P, etc	61,000	49,000	17%	50%
S3L, H4L (3/8, 1/2, & 5/8 DIA)	65,000	51,000	20%	50%
D2L (ASTM-A-1064)	80,000	70,000	-	-
ATC, ANC, AXC, TFTC, TUTC, TUNC	50,000	35,000	17%	50%
Stainless Steel				
Standard Studs, As Manufactured	70,000	35,000	40%	40%
ATS, ANS, UNS, TFTS,TFNC, TUNS	70,000	35,000	40%	40%

Mechanical Properties – Metric (Nelson Standard Studs)

Stud Type	Tensile (UTS) (Minimum) (MPa)	Yield (Minimum) (MPa)	Elongation (2") (Minimum)	Reduction of Area (Minimum)
Mild Steel				
CPL,CFL,PFL,MP,MD, CKL,NBL, H4L (1/4 DIA), L2L, R7P, etc	420	337	17%	50%
S3L, H4L (3/8, 1/2, & 5/8 DIA)	448	351	20%	50%
D2L (ASTM-A1064)	551	482	-	-
ATC, ANC, TFTC, TUTC, AXC, UNC	345	241	17%	50%
Stainless Steel				
Standard Studs, As Manufactured	482	241	40%	40%
ATS,ANS,TFTS, UNS	482	241	40%	40%

Table 2. Mechanical Properties of Standard Nelson Weld Studs

Nelson High Strength Studs (Non-Heat Treated, Weldable)

Property (Minimum Values)	Nelson High Strength Studs (HS)	SAE Grade 5 Bolts	ISO 898-1, Class 8.8 Bolts
Tensile Strength (UTS)	110,000*	120,000	116,000
Yield Strength	92,000	92,000	92,000
Hardness (HRC)	22-34	25-34	22-32
Elongation (2")	6.5%	14%	-
Reduction in Area	42%	35%	-

**Depending on diameter*

Table 3. Comparison of Nelson High Strength Studs to Common Industry Specifications

5

RPP-CALC-62547, Rev. 0

CALCULATION SHEET

Project No. S78918.001	Calculation No. 078908.18.01-S-001	Rev. 0	Page No. 64 of 68
Title: Structural Analysis of TSCR IXC Storage Pad			
Prepared By: JR Martin	Date: 9-16-2019	Checked By: CM Conselman	Date: 9-16-2019

H4L

Headed Concrete Anchors

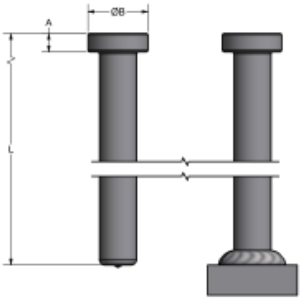

Ordering Example

Nelson Type H4L, 1/2 x 3 1/8 MS, Part No. 101-053-002

Material

Low Carbon Steel (MS) per ASTM-A29/A108, Grades 1010 through 1020
Stainless Steel (SS) (UNS S31603) per ASTM-A276, -A493

DIA	1/4	3/8	1/2	5/8
A	.187	.281	.312	.312
B	.500	.750	1.000	1.250

Dia.	L Length	Part Number SS	Part Number MS	QTY/ CTN	QTY/ Pallet	Welding Accessories - Part Number Ferrule	Chuck	Grip	Foot*
1/4	3/4		102053031	2750	74250	100101067	500001014	501003007	502002001
1/4	1 1/8		101053168	2000	54000				
1/4	2 11/16		101053031	1000	27000				
1/4	4 1/8		101053033	550	14850				
3/8	1 3/8		101053116	1000	27000	100101099	500001018	501003009	502002001
3/8	1 5/8		101053107	845	22815				
3/8	2 1/8		101053037	610	16470				
3/8	2 5/8		101053039	530	14310				
3/8	3 1/8		101053041	430	11610				
3/8	4 1/8		101053043	350	9450				
3/8	5 1/8		102053005	250	6750				
3/8	6 1/8		101053045	150	4050				
3/8	6 1/8 316L	101053417		150	4050				
1/2	2 1/8		101053047	400	10800	100101114	500001085	501003010	502002002
1/2	2 5/8		101053081	315	8505				
1/2	3 1/8		101053002	275	7425				
1/2	3 5/8		101053265	240	6480				
1/2	4 1/8		101053003	180	4860				
1/2	4 1/8 316L	101053332		180	4860				
1/2	5 1/8		102053030	150	4050				
1/2	5 5/16		101053005	120	3240				
1/2	6 1/8		101053008	105	2835				
1/2	6 1/8 SS316L	101053407	101053407	105	2835				
1/2	8 1/8		101053010	65	1755				
5/8	1 7/16		101053331	275	7425	100101187†	500001088	501003014	502002002
5/8	2 11/16		101053012	195	5625				
5/8	3 3/16		101053014	175	4725				
5/8	4 3/16		101053015	125	3375				
5/8	5 3/16		101053064	95	2565				
5/8	6 3/16		101053063	75	2025				
5/8	6 9/16		101053019	70	1890				
5/8	8 3/16		101053023	50	1350				
5/8	10 3/16		102053001	1800	Triwall				

*502-002-045 or 502-002-046 Feet used with Standard Duty guns
502-002-001, 502-002-002 or 502-002-009 Feet used with Heavy Duty guns
†For Vertical Welding Surfaces use Ferrule 100101224

19

CALCULATION SHEET

Project No. S78918.001	Calculation No. 078908.18.01-S-001	Rev. 0	Page No. 65 of 68
Title: Structural Analysis of TSCR IXC Storage Pad			
Prepared By: JR Martin	Date: 9-16-2019	Checked By: CM Conselman	Date: 9-16-2019

[redacted] **General Stud Specifications**

Stainless Steel (As Formed) – 70,000 psi Minimum Ultimate, 35,000 psi Minimum Yield

Thread Diameter	META[1] (sq. in.)	Yield Load[2] (lbs.) at 35,000 psi	Ultimate Tensile Load (lbs) at 70,000 psi	Yield Torque[2] (ft-lbs) at 35,000 psi	Ultimate Torque (ft-lbs) at 70,000 psi	Shear Strength (75% of Tensile Strength)
10-24 UNC	0.0174	609	1,218	1.9	3.9	914
10-32 UNF	0.0199	697	1,393	2.2	4.4	1,045
1/4-20 UNC	0.0317	1,110	2,219	4.6	9.2	1,664
1/4-28 UNF	0.0362	1,267	2,534	5.3	10.6	1,901
5/16-18 UNC	0.0522	1,827	3,654	9.5	19.0	2,741
5/16-24 UNF	0.0579	2,027	4,053	10.6	21.1	3,040
3/8-16 UNC	0.0773	2,706	5,411	16.9	33.8	4,058
3/8-24 UNF	0.0876	3,066	6,132	19.2	38.3	4,599
7/16- 14 UNC	0.1060	3,710	7,420	27.1	54.1	5,565
7/16-20 UNF	0.1185	4,148	8,295	30.2	60.5	6,221
1/2-13 UNC	0.1416	4,956	9,912	41.3	82.6	7,434
1/2-20 UNF	0.1597	5,590	11,179	46.6	93.2	8,384
5/8-11 UNC	0.2256	7,896	15,792	82.3	164.5	11,844
5/8-18 UNF	0.2555	8,943	17,885	93.2	186.3	13,414
3/4-10 INC	0.3340	11,690	23,380	146.1	292.3	17,535
3/4-16 UNF	0.3724	13,034	26,068	162.9	325.9	19,551
7/8-9 UNC	0.4612	16,142	32,284	235.4	470.8	24,213
7/8-14 UNF	0.5088	17,808	35,616	259.7	519.4	26,712
1-8 UNC	0.6051	21,179	42,357	353.0	706.0	31,768
1-14 UNF	0.6791	23,769	47,537	396.1	792.3	35,653

*Torque figures based on assumption that excessive deformation of thread has not taken relationship between torque/tension out of its proportional range.

In actual practice, stud should not be used at its yield load. A factor of safety must be applied. It is generally recommended that studs not be used at more than 60% of yield strength, however, the factor of safety may vary up or down according to the particular application in which the studs are being used.

The user of these studs will make this determination.

	Ultimate Tensile	L = SA	Ultimate Torque	T = 0.2 x D x L ÷ 12
	Yield	Z = YA	Yield Torque	T = 0.2 x D x Z ÷ 12
Where	D =	Nominal Thread Diameter (in)	A =	Mean Effective Thread Area (META) (in^2)
	S =	Tensile Stress (psi)	Y =	Yield Stress (psi)
	L =	Tensile Load (lbs)	Z =	Yield Load (lbs)
	T =	Torque (ft-lbs)		

1 META is used instead of root area in calculating screw lengths because of closer correlation with actual tensile strength. META is based on mean diameter, which is the diameter of an imaginary co-axial cylinder whose surface would pass through the thread profile approximately midway between the minor and pitchdiameters.

2 In actual practice, stud should not be used at its yield load. A factor of safety must be applied. It is generally recommended that studs not be used at more than 60% of yield strength, however, the factor of safety may vary up or down according to the particular application in which the studs are being used. ***The user will make this safety factor determination.***

45

CALCULATION SHEET

Project No. S78918.001	Calculation No. 078908.18.01-S-001	Rev. 0	Page No. 66 of 68
Title: Structural Analysis of TSCR IXC Storage Pad			
Prepared By: JR Martin	Date: 9-16-2019	Checked By: CM Conselman	Date: 9-16-2019

ATTACHMENT 4

SPECTRAL ACCELERATIONS EMAIL – WAIVER 271

CALCULATION SHEET

Project No. S78918.001	Calculation No. 078908.18.01-S-001	Rev. 0	Page No. 67 of 68
Title: Structural Analysis of TSCR IXC Storage Pad			
Prepared By: JR Martin	Date: 9-16-2019	Checked By: CM Conselman	Date: 9-16-2019

MARTIN, JEFFREY R

From: Carpenter, Bruce G <Bruce_G_Carpenter@rl.gov>
Sent: Thursday, May 30, 2019 6:34 AM
To: DORSH, PAUL M; Jeffrey Martin; Mark D. VanderZanden
Cc: Peterson, Brent A
Subject: Updated Design Response Spectra per Waiver 271

Paul, Jeff,

Below is Table 11 referred to in the waiver (271) against TFC-ENG-STD-06, D-1 for your use. Let me know if you have any questions

1

CALCULATION SHEET

Project No. S78918.001	Calculation No. 078908.18.01-S-001	Rev. 0	Page No. 68 of 68
Title: Structural Analysis of TSCR IXC Storage Pad			
Prepared By: JR Martin	Date: 9-16-2019	Checked By: CM Conselman	Date: 9-16-2019

Table 11: Surface DRS for the AN and AW DST Sites

Frequency (Hz)	Spectral Acceleration (g) for Damping of:						
	0.5%	2%	3%	4%	5%	7%	10%
Horizontal Motion							
100	0.1143	0.1143	0.1143	0.1143	0.1143	0.1143	0.1142
50	0.1385	0.1364	0.1359	0.1356	0.1353	0.1350	0.1346
33.3	0.1650	0.1545	0.1520	0.1505	0.1493	0.1477	0.1462
25	0.1991	0.1755	0.1700	0.1665	0.1639	0.1605	0.1571
20	0.2363	0.1975	0.1886	0.1828	0.1786	0.1729	0.1673
13.3	0.3340	0.2553	0.2367	0.2245	0.2152	0.2030	0.1905
10	0.4221	0.3127	0.2849	0.2662	0.2518	0.2326	0.2129
9.26	0.4459	0.3295	0.2994	0.2791	0.2635	0.2425	0.2209
6.13	0.5045	0.3694	0.3315	0.3056	0.2858	0.2580	0.2298
5	0.5069	0.3732	0.3339	0.3067	0.2858	0.2564	0.2265
3.33	0.4929	0.3723	0.3339	0.3067	0.2858	0.2555	0.2247
2.5	0.4968	0.3751	0.3355	0.3074	0.2858	0.2545	0.2227
2	0.5020	0.3774	0.3367	0.3079	0.2858	0.2537	0.2211
1.23	0.4990	0.3778	0.3371	0.3082	0.2858	0.2533	0.2203
1.00	0.4157	0.3117	0.2769	0.2522	0.2332	0.2057	0.1779
0.67	0.2835	0.2103	0.1860	0.1688	0.1554	0.1365	0.1173
0.5	0.2164	0.1596	0.1404	0.1269	0.1166	0.1015	0.0865
0.33	0.1487	0.1092	0.0952	0.0853	0.0777	0.0669	0.0561
0.2	0.0852	0.0657	0.0574	0.0513	0.0466	0.0396	0.0327
0.13	0.0522	0.0430	0.0378	0.0339	0.0311	0.0261	0.0215
0.1	0.0340	0.0300	0.0272	0.0250	0.0233	0.0203	0.0174
Vertical Motion							
100	0.0630	0.0630	0.0630	0.0630	0.0630	0.0629	0.0629
50	0.0792	0.0765	0.0758	0.0753	0.0749	0.0744	0.0738
33.3	0.1223	0.1037	0.0993	0.0964	0.0942	0.0913	0.0883
25	0.1758	0.1359	0.1265	0.1203	0.1157	0.1095	0.1033
20	0.2386	0.1711	0.1552	0.1448	0.1370	0.1266	0.1162
13.3	0.3366	0.2322	0.2060	0.1887	0.1758	0.1580	0.1404
10	0.3415	0.2342	0.2061	0.1874	0.1734	0.1538	0.1346
9.26	0.3409	0.2343	0.2061	0.1873	0.1732	0.1535	0.1342
6.13	0.2877	0.2005	0.1765	0.1602	0.1479	0.1307	0.1137
5	0.2553	0.1804	0.1592	0.1448	0.1338	0.1185	0.1033
3.33	0.2206	0.1612	0.1432	0.1308	0.1213	0.1077	0.0940
2.5	0.2033	0.1502	0.1336	0.1220	0.1132	0.1004	0.0875
2	0.1930	0.1426	0.1268	0.1158	0.1073	0.0952	0.0829
1.23	0.1692	0.1266	0.1128	0.1030	0.0953	0.0845	0.0735
1.00	0.1481	0.1093	0.0969	0.0882	0.0814	0.0720	0.0624
0.67	0.1103	0.0821	0.0727	0.0660	0.0608	0.0535	0.0460
0.5	0.0897	0.0670	0.0593	0.0539	0.0497	0.0436	0.0376
0.33	0.0722	0.0562	0.0498	0.0451	0.0416	0.0361	0.0306
0.2	0.0482	0.0400	0.0358	0.0325	0.0300	0.0259	0.0219
0.13	0.0371	0.0314	0.0280	0.0255	0.0235	0.0203	0.0170
0.1	0.0263	0.0234	0.0213	0.0197	0.0184	0.0162	0.0140

Bruce Carpenter, PE

2505 Garlick, Rm 2314
Office: 509-372-2047