AVANTech
INCORPORATED

## AVANTech COVER SHEET

JEREMIAH JOSEPH ROGERS
STATE OF WASHINGTON
48968
REGISTERED
PROFESSIONAL ENGINEER

8/29/19

| | |
|---|---|
| **CALCULATION ID NUMBER** | RPP-CALC-62464 |
| **REVISION NUMBER** | 1 |
| **PROJECT NUMBER** | 18-13 |

Applies to technical documentation contained within pages 1 through 27

| | |
|---|---|
| **TITLE** | TSCR Process Enclosure Structural/Lifting Calculation |

| | Name | Initials | Date |
|---|---|---|---|
| **Preparer** | Steven Vertner | CS for VIA TELECON | 08/27/19 |
| **Title** | Structural Engineer, S.E., P.E. | | |
| **Preparer** | Raja Beereddy | CS for VIA TELECON | 8/27/19 |
| **Title** | Senior Engineer | | |
| **Reviewer** | Connor Shull | CS | 8/27/19 |
| **Title** | Engineer | | |
| **Approver** | Calvin Hendrix | CS | 08/28/19 |
| **Title** | Engineering Manager | | |

| | |
|---|---|
| Revision Notes | 1 – Seismic Restraints Included, IXC Hose Shielding Removed, Lead Blanket Dead Load Included |

# CALCULATION REVIEW CHECKLIST

| | |
|---|---|
| **CALCULATION ID NUMBER** | RPP-CALC-62464 |
| **REVISION NUMBER** | 1 |

| Item | Yes | N/A* |
|---|---|---|
| 1. Design Inputs such as design bases, regulatory requirements, codes, and standards are identified and documented, verified against customer specifications including edition and addenda. | ✓ | |
| 2. Effect of design package on compliance with the Safety Analysis Report or Certificate of Compliance identified and documented. | | ✓ |
| 3. Revision numbers correct on the list of drawings? | ✓ | |
| 4. Assumptions reasonable? | ✓ | |
| 5. Appropriate analysis method used? | ✓ | |
| 6. Correct values used from drawings? | ✓ | |
| 7. Answers and units correct? | ✓ | |
| 8. Summary of results matches calculations? | ✓ | |
| 9. Material properties properly taken from credible references? | ✓ | |
| 10. Figures match design drawings? | ✓ | |
| 11. Computer input complete and properly identified? | ✓ | |
| 12. Documentation of all hand calculations attached? | ✓ | |
| 13. Reference to Verification / Validation for software? | ✓ | |

| | |
|---|---|
| * N/A, Explain | 2. No Safety Analysis Report directly associated with this document. |

| | Name | Initials | Date |
|---|---|---|---|
| **Reviewed** | Connor Shull | CS | 08/27/19 |

# Table of Contents

**1.0 PURPOSE** ..... **4**
**2.0 REFERENCES** ..... **4**
**3.0 CRITERIA AND DESIGN INPUTS** ..... **5**
**4.0 ENCLOSURE FRAME ANALYSIS FOR LIFT** ..... **7**
**5.0 COMPUTER FOR SEISMIC AND STRUCTURAL CALCULATIONS** ..... **26**
**6.0 CONCLUSIONS** ..... **27**
**ATTACHMENT-1: PROCESS ENCLOSURE STRUCTURAL CALCULATIONS** ..... **28**

# List of Figures

Figure 1: Isometric View of Process Enclosure showing lift points. ..... 6
Figure 2: Lift Point Location. ..... 8
Figure 3: Hoist ring dimensions. ..... 14
Figure 4: Lift lug block welding. ..... 16
Figure 5: Gamma Sensor Mounting. ..... 20
Figure 6: Air Receiver Tank Mounting. ..... 22
Figure 7: Electrical Cabinets (Control Panel). ..... 24

# List of Tables

Table 1: Material Properties of carbon steel ..... 7

# 1.0 PURPOSE

## 1.1. GENERAL DESIGN OBJECTIVES

Avantech Inc has been awarded a contract for the design, manufacture, and factory acceptance testing (FAT) of a Tank-Side Cesium Removal (TSCR) System. All process equipment is housed in a Process Enclosure.

This calculation is to verify that the structural components of the process enclosure are adequate to withstand the forces developed during all-natural hazards. The calculation will also analyze the structural components for lifting.

# 2.0 REFERENCES

**2.1.** Specification for the Tank-Side Cesium Removal Demonstration Project: RPP-SPEC-61910, Rev.1

**2.2.** Design Loads for Tank Farm Facilities: TFC-ENG-STD-06, Rev D-0.

**2.3.** AISC "Steel Construction Manual" 14th Edition.

**2.4.** Minimum Design Loads for Buildings and Other Structures, ASCE 7-10.

**2.5.** IBC "International Building Code" 2015.

**2.6.** H-14-111244, Rev.3, General Arrangement Process Enclosure Layout.

**2.7.** ASME, Section II, Part D, 2017.

**2.8.** Update of Seismic Parameters from Soil Site Class C to Soil Site Class D: 66749-001-RFI-005, Rev.01.

**2.9.** H-14-111280, Rev.1, Process Enclosure Frame Weldment.

**2.10.** Design of Welded Structures by Omer W. Blodgett, The James F. Lincoln Arc Welding Foundation, 1966.

**2.11.** Machinery's Handbook, 26th Edition.

**2.12.** DOE/RL-92-36, Hanford Site Hoisting and Rigging Manual, Rev.1.

**2.13.** ASTM A572 – 07, Standard Specification for High-Strength Low Alloy Columbium-Vanadium Structural Steel.

**2.14.** ASME, Section II, Part C, 2017

**2.15.** ASME B30.20-2013, Below-the-Hook Lifting Devices

**2.16.** ASTM A1085/1085M – 15, Standard Specification for Cold-Formed Welded Carbon Steel Hollow Structural Sections.

**2.17.** RPP-8360, Lifting Attachment and Lifted Item Evaluation, Rev.6, Washington River Protection Solutions

**2.18.** Crosby Catalog, Heavy Lift Specialist, 2014

# 3.0 CRITERIA AND DESIGN INPUTS

## 3.1. CRITERIA

The design of the TSCR Process Enclosure is detailed in Ref. 2.6. and Ref. 2.9. The accelerations are specified per Ref. 2.8.

The Process Enclosure will be designed to a NPH criteria of NDC-2, SDC-2, Limit State C as the criteria are defined in Ref. 2.2.

**Process Enclosure NPH analysis:**

The different NPH criteria the Enclosure is being analyzed against are

1. Dead Load: All dead loads will be taken into account.
2. Live Loads: A Roof live load of 20 psf is taken into account. [Ref.2.2 for NDC-2]
3. Snow Loads: Snow loads of 15 psf are taken into account. [Ref. 2.2 for NDC-2]
4. Wind Loads: Wind loads are analyzed per Ref. 2.2 and are defined in Attachment-1.
5. Seismic Loads: Seismic loads are defined in Attachment-1.
6. Ashfall Loading: No ashfall loads are considered. The ashfall loads for NDC-2 are less than those for roof live loads. Hence roof live loads are the determining criteria and are being analyzed.
7. Flood Loads: Flood loads are not considered as the site is considered away from flood areas.
8. Thermal Forces: The Enclosure is a steel structure and the variation in properties of the materials of construction is negligible for the temperature conditions and hence, thermal forces are ignored
9. No concrete loads are considered as the foundation is out of the scope of the supply for the TSCR system.

The Process Enclosure is located outdoors, and the Enclosure is subjected to wind, snow and seismic loads. The basic structure of the Enclosure is built with HSS (Hollow Structural Sections) and I-beams.

The base of the structure is built with 8” X 6” X ½” HSS and W8 X 31 I-beam. The outer frame (corners and outer edge members) are made of 6” X 6” X 1/2” HSS and 6” X 6” X 5/16” HSS. The other major members are made of 6” X 3” X ¼” thk. tube steel. All other members are made of various angle iron and tube steel sizes.

The overall structure has been analyzed using structural design software RISA 3D. The major frame members and panels have been modeled in RISA 3D and the major components are applied in RISA 3D as point loads based on the center of gravity. The structure has been checked for torsional irregularity and for worst case stresses using AISC allowables based on the most conservative load combination. The details of the seismic analysis of the Process Enclosure are detailed in Attachment 1 of this document.

All major components loads are taken into account in the RISA 3D analysis. However, the bolting of the wall mounted components have not been modeled into RISA and will be analyzed as part of this calculation.

**Process Enclosure Lifting analysis:**

The Enclosure is lifted with slings from 4 lift points located on the base frame. The minimum lift angle will be $70^0$. The two lift lugs on each side are located on the base frame member that runs along the length of the enclosure. The lift analysis will be performed assuming all the load is borne by the longitudinal member and the support provided by cross-members will be ignored for analysis purposes. The load is assumed to be evenly distributed. The Enclosure is lifted without any of the filters and IXC-150 columns installed inside the enclosure.

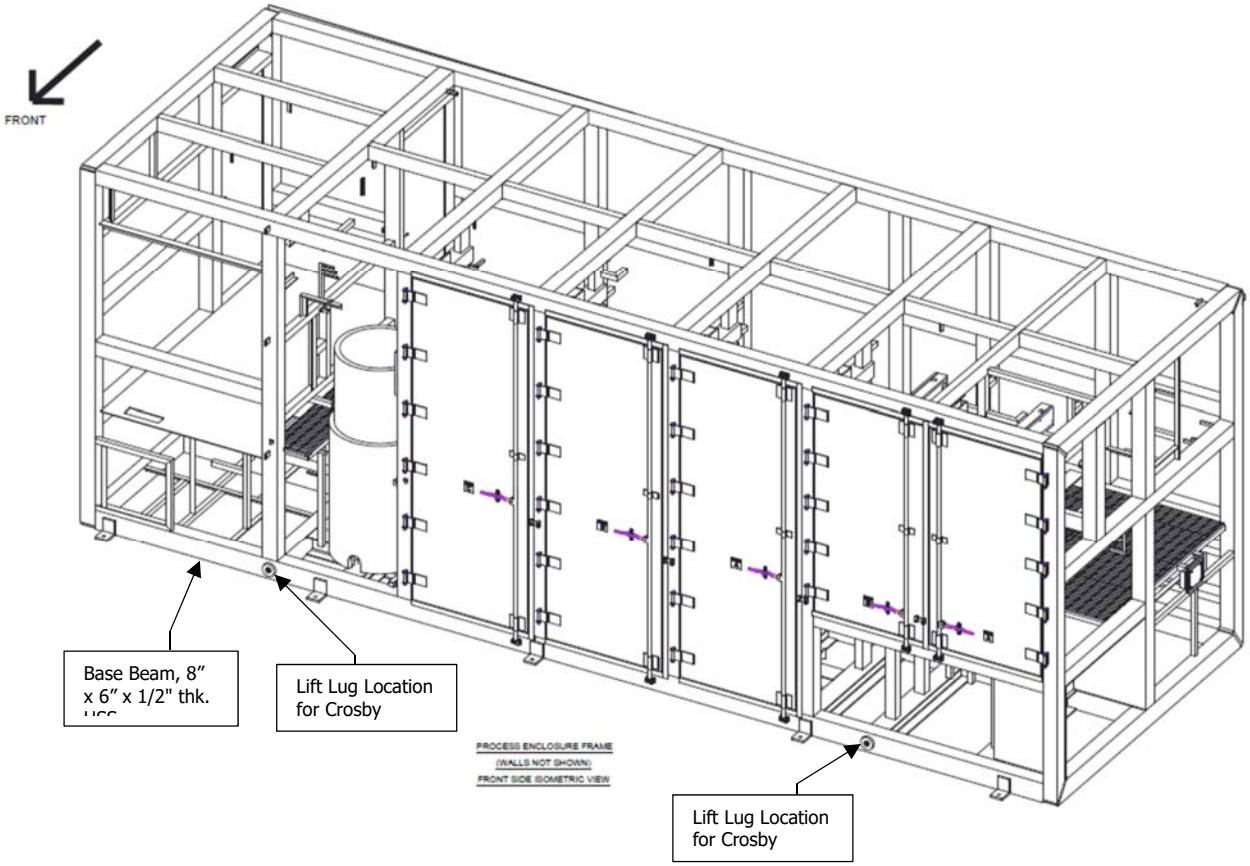


***Figure 1: Isometric View of Process Enclosure showing lift points.***

## 3.2. DESIGN INPUTS FOR LIFT ANALYSIS

Per Ref. 2.6, The lift weight = 70,000 lbs.

The Center of Gravity is taken to be at the center of the Process Enclosure.

The lift weight does not include the weight of the filters and IXC-150 columns. These are to be installed after the Enclosure is set in place. The Process Enclosure is designed to be lifted without the above mentioned components and in a dry state ( No liquid inside the piping/components).

## 3.3. MATERIAL PROPERTIES

All Enclosure structural materials are made of C.S.

***Table 1: Material Properties of Carbon Steel***

| Material | Yield Strength, KSI |
|---|---|
| ASTM A1085 HSS | 50 (Fy) [Ref. 2.16] |
| ASTM A36 plate | 36 [Ref. 2.3] |
| ASTM A572 Gr. 50 | 50 [Ref. 2.13] |

Modulus of Elasticity: 29,000 KSI

The weld filler material/weld wire used will be a minimum of E7XT-1, Ultimate strength: 70 KSI. [Ref. 2.14, Pg.508, Table 1U]

The Base beam is made of 8” X 6” X ½” thk. HSS.
Per Ref. 2.3, Table 1-11,
Area, A = 11.6 $in^2$.
b/t = 9.9
h/t = 14.2
Section Modulus = S = 24.6 $in^3$.
Plastic Section Modulus = Z = 30.5 $in^3$.
$r_{min}$= 2.32 in.

# 4.0 ENCLOSURE FRAME ANALYSIS FOR LIFT

The lifting attachments and the members for lifting are evaluated in accordance with Ref. 2.17. The Enclosure is lifted in a controlled lift in accordance with a pre-defined plan. The Enclosure is also lifted only a few times during its lifetime. It is lifted for transportation and then for offloading and setting it in place. It may be lifted in the future to move offsite after completion of all activities. Due to the controlled lift and the limited number of lifts during the life time of the enclosure, the Enclosure will be analyzed for reduced dynamic and contingency factors [Ref. 2.17, section 6.3.3].

A Dynamic factor of 10% shall be used.
A contingency factor of 5% shall be used.

During lifting and transportation, the IXC-150 vessels and the TSCR Filter vessels will not be installed inside the enclosure. They will be placed inside after the Enclosure has been located at its final position and anchored.

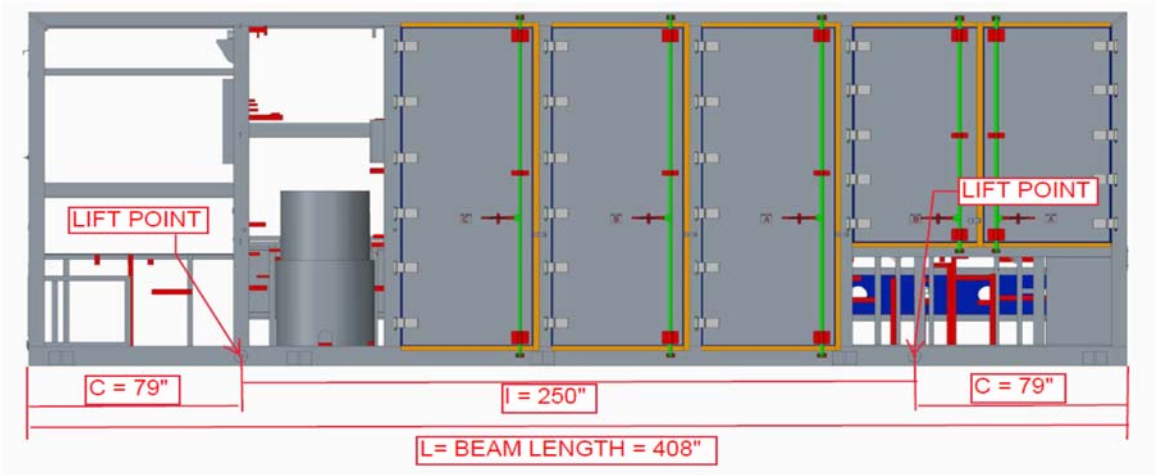


***Figure 2: Lift Point Location.***

## 4.1. ACCEPTANCE CRITERIA FOR LIFTING

The acceptance criteria will be based on allowable stresses determined from equations listed in Ref. 2.3.

Factor of Safety = Allowable stress/calculated stress

A value greater than 1 indicates that the components exceeds the allowable stress or load capacity.

## 4.2. LIFT WEIGHT

Total Lift weight = 70,000 lbs. [Ref.2.6]

Applying a contingency factor of 5% (As explained in section 4.0)
And a dynamic factor of 10% (As explained in section 4.0)

1.05 x 1.10 x 70000 lbs. = 80,850 lbs.

Therefore, the lift load shall be 80,850 lbs.

We shall assume that the load is distributed across 3 lift points ( for the purpose of calculating load per lug).

Load per lift point = 80,850/3 = 26,950 lbs.

Maximum Vertical reaction on beam at each support = 26,950 lbs.

**<u>Angle of Lift:</u>**

As descried in section 3.1, the minimum angle of lift = $70^0$.
Therefore maximum load per lift point = Load per lift point/ sin $70^0$

Simplifying, we get Maximum load per sling = 28,680 lbs.

## 4.3. LOAD ON EACH BEAM

There are 2 lift points along the length of each beam
Therefore maximum load per each beam = 2 x maximum load per lift point

Maximum load per beam = 2 x 26,950 = 53,900 lbs.
We shall assume that this load is evenly distributed across the length of the beam.

### 4.3.1. Bending Moment in the Beam

From Section 4.3, maximum load per beam = 53,900 lbs.
The load is assumed to be evenly distributed on the beam.
The lift points are symmetric.

Therefore the load configuration is similar to Case 5 of Ref. 2.11 , Pg. 238
(Both Ends Overhanging supports symmetrically, uniform load).

From Ref. 2.11,
*Stress at each support* = $Wc^2/(2ZL)$
*Stress at center* = $(W/2ZL) \times (c^2 - 0.25\, l^2)$

From Ref. 2.11, Case-5, if cross-section is constant, the greater of the two stresses above is the maximum stress.

For the above equations, From Figure 2.
W = total load = 53,900 lbs.
c = distance from lift point to end of the beam = 79".
L =total length of beam = 408".
l = distance between lift points = 250"
S = Section Modulus of member (defined in section 3.3)

From the above two equations, maximum bending moment will be greater of
Bending Moment at each support = $Wc^2/(2L)$
Bending Moment at center = $(W/2L) \times (c^2 - 0.25\, l^2)$

Bending Moment at each support/lift point = $53{,}900 \times 79^2 / (2 \times 408)$
Bending Moment at each support/lift point = 412,243 in-lbs.

Bending Moment at center = $(53{,}900/(2 \times 408)) \times (79^2 - 0.25 \times 250^2)$
Bending Moment at center = - 619,850 in-lbs.

Maximum Bending Moment will be the greater of the magnitude of the two values above,

Hence Maximum Bending Moment = 619,850 in-lbs. ( At center)

### 4.3.2. Beam in Flexure

Per Ref. 2.3, F7, the nominal flexural strength $M_n$, shall be the lowest value obtained according to the limit states of yielding, flange local buckling and web local buckling.

Per Ref. 2.3, for Yielding $M_n = M_p = F_yZ$
$F_y$ = 50,000 psi for ASTM A1085 defined in section 3.3
Z = 30.5 $in^3$ defined in section 3.3
Therefore Nominal Flexure strength= $M_n = M_p$ = 50,000 x 30.5
$M_n = M_p$ = 1,525,000 in-lbs.

**<u>Determination of compact section:</u>**
For member flange,
If b/t ratio < 1.12 x $(E/Fy)^{1/2}$, then member flange is a compact section.

b/t = 9.9 defined in section 3.3
E= 29 E6. psi
$F_y$ = 50,000 psi
Simplifying b/t < 26.97
Therefore the member flange is a compact section and per Ref. 2.3, F7.2.a, for compact section, the limit state of flange local buckling does not apply.

For Member Web,
If h/t < 2.42 x $(E/Fy)^{1/2,}$ then member web is a compact section.
h/t = 14.2 defined in section 3.3
E= 29 E6. psi
$F_y$ = 50,000 psi
Simplifying h/t < 58.28
Therefore the member web is a compact section and per Ref. 2.3, F7.3.a, for compact section, the limit state of web local buckling does not apply.

Therefore only yielding applies in flexure.
Therefore Nominal Flexure Strength = $M_n = M_p$ = 1,525,000 in-lbs.

Allowable Flexure Strength = $M_n/\mathbf{W}_b$ From Ref. 2.3, Section F1.

$\mathbf{W}_b$ = 1.67 (Flexure Strength Factor), Ref, 2.3, Section F1.
Therefore Allowable Flexure Strength = 1,525,000/1.67 = 913,174 in-lbs.

It has been calculated in section 4.3.1, that magnitude of maximum bending moment = Bending Moment at center = 619,850 in-lbs.

Therefore Factor of Safety = Allowable Flexure Strength/Maximum Bending Moment

**Factor of Safety = 913,174/ 619,850= 1.47**

**Hence using the lift lugs located on the Base member (6" X 8" X ½" thk. HSS) is adequate for lifting with a minimum sling angle of $70^0$.**

### 4.3.3. Beam in Shear

From Section 4.2, Maximum load per lift point = 26,950 lbs
From Ref. 2.3 and section 3.3 of this document,
Area of 8" X 6" X ½" HSS = 11.6 $in^2$.

For HSS From Ref. 2.3, Section G5 and G2,
Nominal Shear Strength = $V_n = 0.6\ F_y A_w C_v$

$F_y$ = 50,000 psi

Calculation of $A_w$
$A_w$ = 2ht from Ref. 2.3, Section G5

t = 0.465 in. (for 8" X 6" X ½" HSS from Table 1-11 of Ref. 2.3)

h/t = 14.2 (for 8" X 6" X ½" HSS from Table 1-11 of Ref. 2.3)

simplifying above, h = 14.2 x t

Therefore h = 14.2 x 0.465 = 6.603 in.

$A_w$ = 2ht

Simplifying, $A_w$ = 2 x 6.603 x 0.465 = 6.14 $in^2$.

Calculation of $C_v$

Per Ref. 2.3, Section G2 (b)(i), $C_v$ =1.0

When $h / t_w \leq 1.10\sqrt{k_v E / F_y}$

Where $t_w$ = t (from Ref. 2.3, Section G5), t = 0.465 in. (shown above)

$K_v$ = 5 (from Ref. 2.3, Section G5)

E = 29 E6. psi
$F_y$ = 50,000 psi
h = 6.603 in. (calculated above)
Simplifying we get, 14.2 ≤ 59.24

As the equation is satisfied, $C_v$ = 1.0

Nominal Shear Strength = $V_n = 0.6\ F_y A_w C_v$

Nominal Shear strength of Base member = 0.6 x 50,000 x 6.14 x 1.0 = 184,200 lbs.

But per Ref. 2.3, Section G1, Allowable shear strength = $V_n/\mathbf{W}_v$ $\mathbf{W}_v$ = 1.67 Ref, 2.3, Section G1

Therefore Allowable Shear Strength of member = 184,200/1.67

Allowable Shear strength = 110,299 lbs.

Factor of Safety = Allowable Shear strength/Maximum shear load

**Factor of Safety = 110,299/26,950 = 4.09**

**Hence the 6" X 8" X 1/2" base member is adequate in shear also.**

### 4.3.4. Beam in compression

The maximum load due to sling angle = 28,680 lbs. (From section 4.2)

Angle of lift = $70^0$.

Horizontal reaction load = maximum load x cos $70^0$

Horizontal reaction load = 28,680 x cos $70^0$

Horizontal reaction load = 9809 lbs.

Flexural Buckling:

For Design of Members for Compression, from Ref. 2.3, Table E1.1 (16.1-32) for HSS cross sections, E3 Applies and the limit state is Flexural Bending.

Laterally unbraced length = L = 250" (Figure 2)

Effective length factor = K = 1 (Ref 2.3, Table C-A-7.1, Case d, pg 16.1-511)

$r_{min}$= 2.32" ( From section 3.3)

| | |
|---|---|
| $KL/r_{min}$ = 107.76 | Criteria 1 from Ref. 2.3, Section E3, Pg. 16.1-33 |
| 4.71 x $(E_{steel}/F_y)^{1/2}$ = 113.43 | Criteria 2 from Ref. 2.3, Section E3, Pg. 16.1-33 |

As criteria 2 is greater than criteria 1, Equation E3-2 of Ref. 2.3, Pg. 16.1-33 will apply.

$F_{cr}$ = [0.658 $^{Fy/Fe}$]$F_y$ (Equation E3-2 of Ref. 2.3)

Where $F_e$ is the elastic buckling stress determined in accordance with Equation E3-4 of Ref. 2.3

$$F_e = \frac{\pi^2 E}{\left(\frac{KL}{r}\right)^2}$$

Using the values described above and material properties in section 3.3,

Simplifying, we get

$F_e$ = 24,649 psi.

$F_y$ = 50,000 psi.

$F_{cr}$ = [0.658 $^{Fy/Fe}$]$F_y$ (Equation E3-2 of Ref. 2.3)

$F_{cr}$ = [0.658 $^{(50,000/24,649)}$]50,000 = 21,391 psi.

Nominal compressive strength = $P_n$= $F_{cr}$ x $A_g$ (Equation E3-1 of Ref. 2.3)

$A_g$ = Gross cross-sectional area = 11.6 $in^2$ ( From section 3.3)

$P_n$= 21,391 x 11.6 = 248,136 lbs.

Allowable compressive strength = $P_n$/ $\mathbf{W}_c$

$\mathbf{W}_c$ = 1.67 (From Ref. 2.3, Section E1, Pg. 16.1-31)

Allowable compressive strength = $P_n$/ $\mathbf{W}_c$ = 248,136/1.67 = 148,584 lbs.

Factor of Safety = Allowable compressive strength/ Horizontal reaction load

Factor of Safety = 148,584/9809 = 15.14

Therefore the base beam is safe in compression also.

## 4.4. LIFTING LUG BLOCK.

A lifting lug block is welded to the HSS base member. This lug is drilled and tapped to take the threaded hoist ring.

Load per each lifting lug block = load per each lift point due to the sling angle
Load per each lifting lug block = 28,680 lbs. ( From Section 4.2)

The lifting lug block will be evaluated as a round HSS member for cantilever loading.

Lifting Lug Block, OD = $d_o$= 5" [From Ref. 2.9, Item 14 on sheet 3)
Lifting Lug Block , ID= $d_i$ = 2.0"
Material = ASTM A572, Gr 50
Minimum Yield Strength = 50,000 psi. [Ref. 2.13]

$L_v$ = 1" distance from maximum to zero shear force (Ref. 2.3, Section G6, Pg. 16.1-72, Dimension defined in Ref. 2.9, sheet 7)

t = $(d_o-d_i)/2$ = 1.5" , Thickness of lifting lug block

A = 3.142 $(d_o^2-d_i^2)/4$ = 16.50 $in^2$ , Area ( Ref. 2.3, Table 17-27, Pg. 17-39)

S = 3.142 $(d_o^4-d_i^4)/(32d_o)$ = 11.96 $in^3$ , Section Modulus (Ref. 2.3, Table 17-27, Pg. 17-39)

Z= $d_o^3/6 – d_i^3/6$ = 19.5 $in^3$, Plastic Section Modulus ( Ref. 2.3, Table 17-27, Pg. 17-39)

Cantilever distance = $L_v$ + load bearing distance on hoist (h)

h = distance from the figure below= 2.41" from Ref. 2.18

Cantilever distance = 1+2.41 = 3.41"

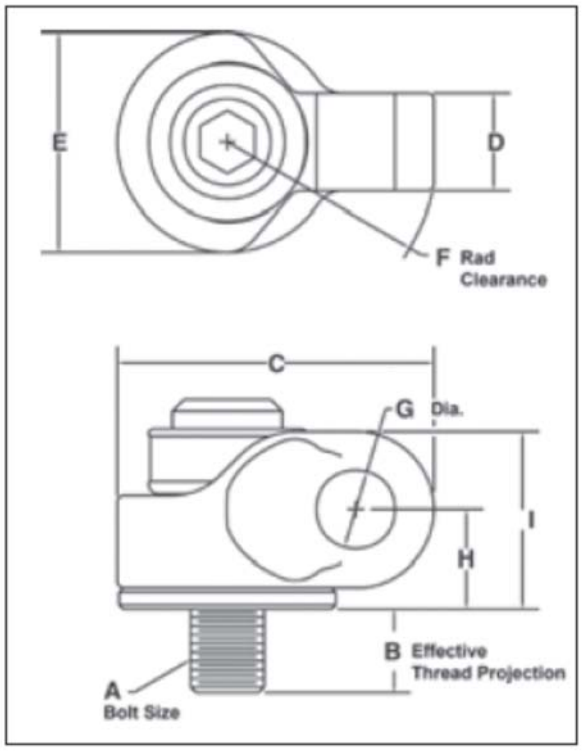


***Figure 3: Hoist ring dimensions.***

<u>Checking for minimum edge distance per AISC, Section J3.4, Pg. 16.1-122</u>

$E_d = 1.25\ d_i$ = Minimum Edge distance required ( from Ref. 2.3, Table J3.4, Pg. 16.1-123)

$E_d = 1.25 \times 2 = 2.5$".

Edge distance = radius of lifting block

Lifting block OD = 5"..,

Edge distance = 5/2 = 2.5".

The available edge distance meets the minimum required edge distance of 2.5". Hence the edge distance is acceptable.

<u>Lifting Lug Block in Flexure:</u>

Moment on Lifting Lug Block = cantilever distance x load on lifting lug block

Moment on Lifting Lug Block = M = 3.41 x 28,680 = 97,799 in-lbs.

Per Ref. 2.3, Table B4.1b, Case 20, Pg. 16.1-17

When $d_o/t$ is less than $0.07\ E/F_y$ the section is a compact section.

$d_o/t = 5/1.5 = 3.333$

$0.07\ E/F_y = 0.07 \times 29E6/50{,}000 = 40.6$

Therefore the lifting lug block section is a compact section.

For a round HSS, per section F8 of Ref. 2.3, Pg. 16.1-57,

When $d_o/t$ is less than $0.45E/F_y$, then nominal flexural strength $M_n$ shall be the lower value obtained according to the limit states of yielding and local buckling.

$d_o/t = 3.333$

$0.45E/F_y = 261$,

As the condition is satisfied, $M_n$ shall be calculated as defined in section F8 of Ref. 2.3. However for compact sections, per Ref. 2.3, section F8-2, local buckling does not apply for compact sections.

Therefore, only yielding shall be considered.

Nominal Flexural Strength, $M_n = M_p = F_y Z$ (Ref. 2.3, Equation F8-1, Pg. 16.1-57)

$M_n = M_p = 50{,}000 \times 19.5 = 975{,}000$ in-lbs.

Flexural Yielding Factor = $\Omega_b$ = 1.67 ( Ref. 2.3, Section F1, Pg. 16.1-46)

Allowable Moment = Nominal Flexural strength/ Flexural Yielding factor

Allowable Moment = $M_a = M_n/\Omega_b$ = 975,000/1.67 = 583,832 in-lbs.

Factor of Safety = Allowable Moment/ Moment on Lifting Lug Block

Factor of Safety = $M_a/M$ = M = 583,832/ 97,799 = 5.97

<u>Lifting Lug Block in Shear:</u>

The nominal shear strength of a round HSS, according to a limit state of shear yielding is given as

$V_n = F_{cr} A_g/2$ ( Ref., 2.3, Section G6, Pg. 16.1-72)

Where $F_{cr}$ is larger of the two values defined in equation G6-2a and G6-2b of Ref.2.3, Pg.16.1-72

$$F_{cr} = \frac{1.60E}{\sqrt{\frac{L_v}{D}}\left(\frac{D}{t}\right)^{\frac{5}{4}}}$$

…… Equation G6-2a, Ref. 2.3

E= 29 E6 psi

$L_v$ = 1”

D= 5”

t= 1.5”

Simplifying, we get,

$F_{cr}$ = 23,035.87 ksi from Equation G6-2a, Ref. 2.3

$$F_{cr} = \frac{0.78E}{\left(\frac{D}{t}\right)^{\frac{3}{2}}}$$

…… Equation G6-2b, Ref. 2.3

Simplifying , we get $F_{cr}$ = 3716.84 ksi. From equation G6-2b, Ref. 2.3

But according to Section G6 of Ref. 2.3, $F_{cr}$ shall not exceed $0.6F_y$.

Therefore $F_{cr}$ = 0.6 X 50000 = 30,000 psi… Defining $F_{cr}$.

Nominal Shear Strength = $V_n = F_{cr} A_g/2$ ( Ref. 2.3, Section G6, Pg. 16.1-72)

$A_g$ = Gross cross-sectional area = 16.50 $in^2$ calculated above in this same section.

$V_n = F_{cr} A_g/2$ = 30,000 x 16.50/2 = 247,500 lbs.

Shear Yielding Factor = $\mathbf{W}_v$ = 1.67 ( Ref. 2.3, Section F1, Pg. 16.1-67)

Allowable Shear strength = $V_a = V_n/\mathbf{W}_v$ = 247,500/1.67 = 148,204 lbs.

Factor of safety = Allowable Shear strength/Maximum load on lifting lug block

Factor of safety = 148,204/28,680 = 5.17

### 4.4.1. Weld Area of Lifting Lug Block.

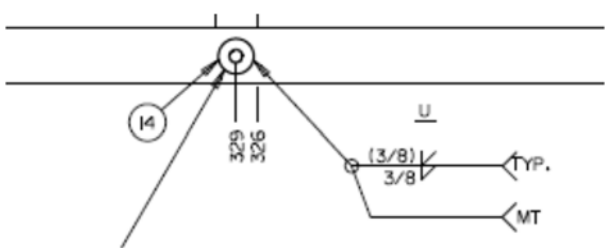


***Figure 4: Lift lug block welding.***

The lifting lug block is welded to the HSS base frame with a 3/8" all around fillet weld on the outside of the enclosure and a 3/8" bevel weld on the inside of the enclosure .

For calculation purposes, we shall only take the weld on one side.

Weld length = 3.142 x 5 = 15.71".
Weld size = 0.375".
Weld area of a fillet weld = 0.707 x 0.375 x 15.71 = 4.16 $in^2$.

### 4.4.2. Calculation of Allowable Weld Shear Strength:

**For Base Metal:**
Per Ref. 2.3, Section J4.2, for elements in shear, the available shear strength of connecting elements in shear shall be the lower value according to the limit states of shear yielding and shear rupture.

**Base Metal, Shear Yield:**
Per Ref. 2.3, J4-3, For shear yielding of the element,

$R_n = 0.60F_yA_{gv}$
**W** = 1.50 Strength factor

$F_y$ = 50,000 psi ( Lower of the yield strength of the HSS or the Lifting Lug Block), HSS $F_y$ = 50,000 psi (ASTM A1085), Lifting lug block $F_y$ = 50,000 psi (ASTM A572 Gr.50)

$A_{gv}$ = Gross area subject to shear = 4.16 $in^2$.

$R_n$ = 0.60 x 50,000 x 4.16 = 124,800 lbs.
$R_n$/ = **W** = 124,800/1.5 = 83,200 lbs. = Allowable Base Metal Shear Yield Strength.

**Base Metal, Shear Rupture:**
Per Ref. 2.3, J4-4, For shear yielding of the element,

$R_n = 0.60F_uA_{nv}$
**W** = 2.0 Strength factor

$F_u$ = 65,000 psi ( Lower of the tensile strength of the HSS or the Lifting Lug Block), HSS $F_u$ = 65,000 psi (ASTM A1085), Lifting lug block $F_u$ = 65,000 psi (ASTM A572 Gr.50)

$A_{nv}$ = Gross area subject to shear = 4.16 $in^2$.

$R_n$ = 0.60 x 65,000 x 4.16 = 162,240 lbs.
$R_n$/**W** = 162,240/2 = 81,120 lbs.= Allowable Base Metal Shear Rupture Strength.

**Weld Shearing:**
Per Ref. 2.3, Table J2.5,
Nominal available strength for shear for a fillet weld = $F_{nw}$ =0.60$F_{Exx}$
Where, $F_{EXX}$ = 70 ksi.

$F_{nw}$ =0.60 x 70,000 = 42,000 psi.

$\mathbf{W}_w$ = 2.0, Strength factor- Ref, 2.3, Table J2.5

Per Ref. 2.3, Equation J2-3,
For Weld metal, Nominal weld metal strength,
$R_{nw} = F_{nw} \times A_{we}$

Where $A_{we}$ = effective weld area = 4.16 $in^2$.
$R_{nw}$ = 42,000 x 4.16 = 174,720 lbs.
$R_{nw}$ / $\mathbf{W}_w$ = 174,720/2 = 87,360 lbs. = allowable strength for weld shear.

### 4.4.3. Verification of Weld Shear Strength:

The minimum weld strength in shear shall be the minimum of all the allowable weld strengths calculated in section 4.4.2

Minimum allowable weld strength in shear = 81,120 lbs.= Allowable Base Metal Shear Rupture Strength.

Factor of Safety = Allowable strength/maximum load on each lifting block
Factor of safety = 81,120/28,680 = 2.83

Therefore the 3/8" fillet weld is sufficient for the lifting block.

## 4.5. HOIST RING.

A side pull Hoist ring is used to lift the Process Enclosure.
The load per each hoist ring = 28,680 lbs. From Section 4.2. ( This is based on the load being borne by 3 lugs only)

The hoist ring = Crosby- HR-1200.
The design rating of the hoist ring = 29,000 lbs. (Ref. 2.18, Working Load Limit).

Factor of Safety = 29,000/28,680 = 1.011
Therefore the selected hoist ring is adequate for the design load.

## 4.6. MOUNTING OF COMPONENTS WITHIN THE ENCLOSURE (2 OVER 1 EVALUATION).

A 2 over 1 review of all components and supports for the components has been performed for the various components inside the Process Enclosure. It was determined that the following components could fall/dislodge from their mounting locations and potentially cause a breach to the Process Enclosure boundary.

IXC-150 Columns
Filters
Delay Tank
Shield boxes
Gamma Sensors
Air Receiver Tank
Control Panels

The major components ( IXC-150 columns, Filters, Delay Tank, shield boxes) and their mounting/restraints are analyzed in the RISA analysis ( Attachment -1) and have been determined to be adequate for the loading and will not fall over or damage the Enclosure. The supports for all major equipment mounted inside the enclosure are also modeled in RISA and are analyzed as point loads on those supports in the overall analysis of the enclosure which is detailed in Attachment-1. However the mounting mechanism of the following equipment ( Gamma sensors, Air Receiver Tank and Control Panel) to their respective supports are not analyzed in the RISA analysis. This section will analyze the mounting/bolting mechanism for the 3 components identified for a 2 over 1 evaluation and that have not been analyzed for mounting/bolting.

The applicable loads and load combinations will be taken from the RISA analysis ( Attachment-1). All 3 components are mounted by bolting to the support members.All bolts for mounting equipment listed shall be ASTM A307.

### 4.6.1. Calculation of Allowable strength/stress.

For a bolted connection, per Ref. 2.3, Equation J3-1
The nominal shear/tensile strength of a bolt is given by

$R_n = F_n A_b$
Where $F_n$ = Nominal Tensile Strength( $F_{nt}$ ) or Nominal shear strength ( $F_{nv}$ )from TableJ3.2 of Ref. 2.3

All 3 components ( Gamma sensors, Air Receiver Tank and Control panel) use ASTM A307 bolts, 3/8" in diameter.

**<u>Nominal Strength of 3/8" diameter, ASTM A307 bolts:</u>**
For a 3/8" bolts,
$A_b$ = Net tensile stress area = 0.0780 $in^2$ [From Ref. 2.3, Table 7-17]

For A307 Bolts, From Table J3.2 of Ref. 2.3
Nominal Tensile strength, $F_{nt}$ = 45,000 psi
Nominal Shear strength, $F_{nv}$ = 27,000 psi

Nominal shear strength of bolt = $R_n = F_{nv} A_b$
$R_n$ = 27,000 x 0.078 = 2,106 lbs.
Nominal Tensile strength of bolt = $R_n = F_{nt} A_b$
$R_n$ = 45,000 x 0.078 = 3,510 lbs.

**<u>Allowables for Strength design for 3/8" diameter, ASTM A307 bolts:</u>**
From Section J3.6 of Ref. 2.3
Design Tensile or Shear Strength (Strength Design) = $\Phi R_n$
$\Phi$ = 0.75

Design Tensile strength of bolt = Nominal tensile strength of bolt x $\Phi$
Design Tensile strength of bolt = 3,510 x 0.75 = 2,632.5 lbs.

Design Shear strength of bolt = Nominal shear strength of bolt x $\Phi$
Design Shear strength of bolt = 2,106 x 0.75 = 1,579.5 lbs.

**<u>Allowables for Stress design for 3/8" diameter, ASTM A307 bolts:</u>**
From Section J3.6 of Ref. 2.3
Allowable Tensile of Shear Stress (Allowable Stress Design) = $R_n$ / $\Omega$
$\Omega$ = 2.0

Allowable Tensile strength = Nominal Tensile strength of bolt/ $\Omega$
Allowable Tensile strength = 3,510 / 2 = 1,755 lbs.

Allowable Shear strength = Nominal Shear strength of bolt/ $\Omega$
Allowable Shear strength = 2,106 / 2 = 1,053 lbs.

### 4.6.2. Gamma Sensors

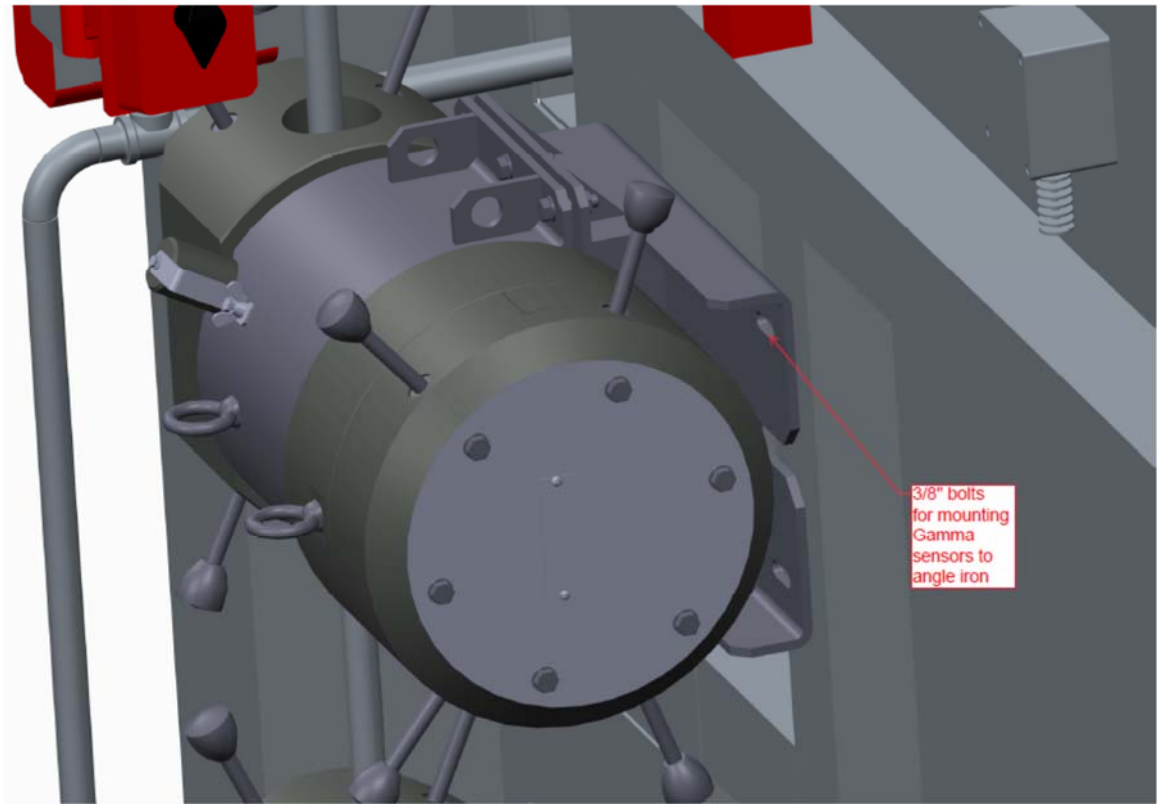


***Figure 5: Gamma Sensor Mounting.***

Gamma sensor is mounted to 3” X 3” X ¼” angle iron members. These members are analyzed as part of the overall enclosure frame weldment in Attachment-1. The load due to gamma sensors are applied as point loads on the angle iron members at the mounting locations.

The Gamma sensors are mounted to the angle iron members with ASTM A307, 3/8” bolts. Each sensor is mounted with 4 bolts.

The loading and load combinations have been developed in the RISA Analysis and the same loads are taken for analyzing the bolts.

The Gamma sensor loading is analyzed in Sheets 25 and 26 of Attachment-1.
From Sheet 26 of Attachment 1, the most conservative load combinations are

For Allowable stress design = 1.08D + 0.7 $Q_E$ [Ref. 2.4, 2.4.1.5- Defined on sheet 26 of Attachment-1]

For strength design = 1.32D + 1.5 $Q_E$ + 1.00L + 0.2S [Ref. 2.4, 12.4.3.2- Defined on sheet 26 of Attachment-1]
From Sheet 26 of Attachment 1,
D = weight of gamma sensor = 463 lbs.
$Q_E = F_p$ = 287 lbs.
L = 0, S = 0 (Located inside enclosure)

**Allowable Stress Design:**
Maximum load = 1.08D + 0.7 $Q_E$
Substituting, we get maximum load = 1.08 x 463 + 0.7 x 287 = 701 lbs.

The bolts are in shear.
Number of bolts = 4
To be conservative, we shall assume load is borne by only 2 bolts.
Load per bolt = 701/2 = 350.5 lbs.
Allowable shear strength of 3/8" bolt for stress design = 1,053 lbs. [calculated in 4.6.1]

Factor of safety = Allowable shear strength/load per bolt
Factor of safety = 1,053/350.5 = 3.00

**Strength Design:**
Maximum load = 1.32D + 1.5 $Q_E$ + 1.00L + 0.2S
Substituting, we get maximum load = 1.32 x 463 + 1.5 x 287 = 1,042 lbs.

The bolts are in shear.
Number of bolts = 4
To be conservative, we shall assume load is borne by only 2 bolts.
Load per bolt = 1,042/2 = 521 lbs.
Allowable shear strength of 3/8" bolt for strength design = 1,579.5 lbs. [calculated in 4.6.1]

Factor of safety = Allowable shear strength/load per bolt
Factor of safety = 1,579.5/521 = 3.03

Hence the 3/8" bolts are adequate for the Gamma sensors.

### 4.6.3. Air Receiver Tank

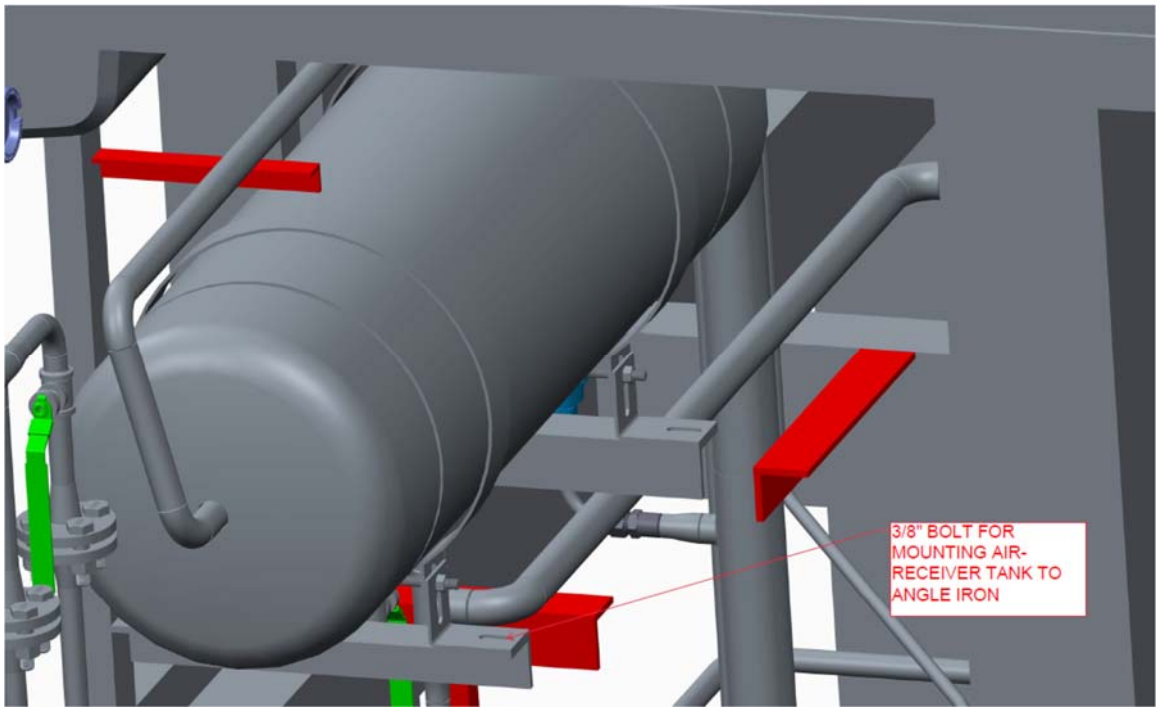


***Figure 6: Air Receiver Tank Mounting.***

Air Receiver Tank is mounted to 2" X 2" X ¼" angle iron members. These members are analyzed as part of the overall enclosure frame weldment in Attachment-1. The load due to the Air Receiver Tank is applied as point loads on the angle iron members at the mounting locations.

The Air Receiver Tank is mounted to the angle iron members with ASTM A307, 3/8" bolts. The Tank is mounted with 4 bolts.

The loading and load combinations have been developed in the RISA Analysis and the same loads are taken for analyzing the bolts.

The Air Receiver Tank loading is analyzed in Sheets 29 and 30 of Attachment-1.
From Sheet 30 of Attachment 1, the most conservative load combinations are

For Allowable stress design = $1.08D + 0.7\ Q_E$ [Ref. 2.4, 2.4.1.5- Defined on sheet 30 of Attachment-1]

For strength design = $1.32D + 1.5\ Q_E + 1.00L + 0.2S$ [Ref. 2.4, 12.4.3.2- Defined on sheet 30 of Attachment-1]
From Sheet 30 of Attachment 1,
D = weight of Air Receiver Tank = 205 lbs.
$Q_E = F_p = 88$ lbs.
L = 0, S = 0 (Located inside enclosure)

**Allowable Stress Design:**
Maximum load = 1.08D + 0.7 $Q_E$
Substituting, we get maximum load = 1.08 x 205 + 0.7 x 88 = 283 lbs.

The bolts are in shear.
Number of bolts = 4
To be conservative, we shall assume load is borne by only 2 bolts.
Load per bolt = 283/2 = 141.5 lbs.
Allowable shear strength of 3/8" bolt for stress design = 1,053 lbs. [calculated in 4.6.1]

Factor of safety = Allowable shear strength/load per bolt
Factor of safety = 1,053/141.5 = 7.44

**Strength Design:**
Maximum load = 1.32D + 1.5 $Q_E$ + 1.00L + 0.2S
Substituting, we get maximum load = 1.32 x 205 + 1.5 x 88 = 403 lbs.

The bolts are in shear.
Number of bolts = 4
To be conservative, we shall assume load is borne by only 2 bolts.
Load per bolt = 403/2 = 201.5 lbs.
Allowable shear strength of 3/8" bolt for strength design = 1,579.5 lbs. [calculated in 4.6.1]

Factor of safety = Allowable shear strength/load per bolt
Factor of safety = 1,579.5/201.5 = 7.84

Hence the 3/8" bolts are adequate for the Air Receiver Tank.

### 4.6.4. Control Panel

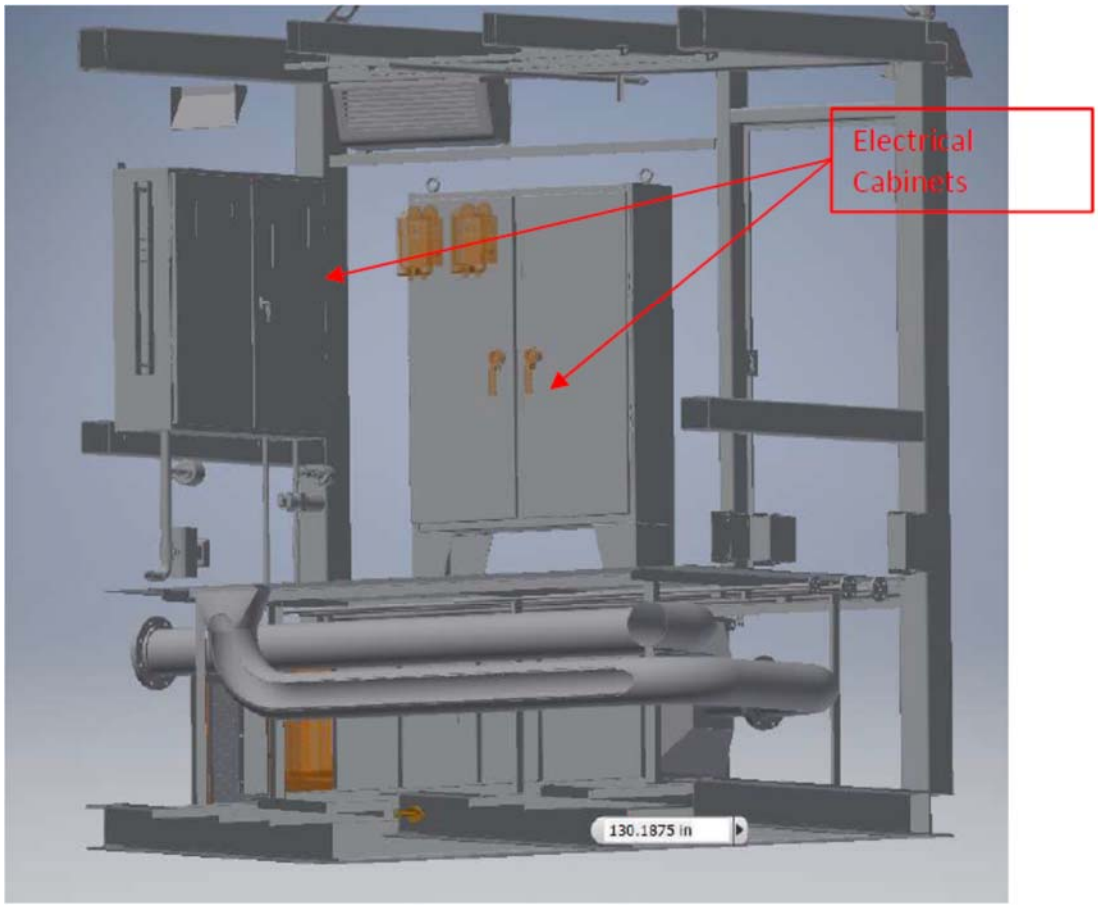


***Figure 7: Electrical Cabinets (Control Panel).***

There are Electrical Cabinets (control panels) mounted inside the airlock chamber (WP-ENCL-002 and WP-ENCL-004).

The cabinets are bolted to angle iron members in the frame. These members are analyzed as part of the overall enclosure frame weldment in Attachment-1. The load due to the cabinets is applied as point loads on the angle iron members at the mounting locations.

The cabinets are mounted to the angle iron members with ASTM A307, 3/8" bolts. The cabinets are mounted with 4 bolts.

The loading and load combinations have been developed in the RISA Analysis and the same loads are taken for analyzing the bolts.

The Cabinet loading is analyzed in Sheets 27 and 28 of Attachment-1.

From Sheet 28 of Attachment 1, the most conservative load combinations are

For Allowable stress design = 1.08D + 0.7 $Q_E$ [Ref. 2.4, 2.4.1.5- Defined on sheet 28 of Attachment-1]

For strength design = 1.32D + 1.5 $Q_E$ + 1.00L + 0.2S [Ref. 2.4, 12.4.3.2- Defined on sheet 28 of Attachment-1]

The bolting shall be verified for the heavier cabinet (WP-ENCL-002) and if they are adequate, it can be safely assumed that the same size bolts are adequate for the smaller cabinet.

From Sheet 28 of Attachment 1,
D = weight of cabinet = 750 lbs.
$Q_E = F_p$ = 312 lbs.
L = 0, S = 0 ( Located inside enclosure)

**Allowable Stress Design:**
Maximum load = 1.08D + 0.7 $Q_E$
Substituting, we get maximum load = 1.08 x 750 + 0.7 x 312 = 1,028 lbs.

The bolts are in shear.
Number of bolts = 4
To be conservative, we shall assume load is borne by only 2 bolts.
Load per bolt = 1,028/2 = 514 lbs.
Allowable shear strength of 3/8" bolt for stress design = 1,053 lbs. [calculated in 4.6.1]

Factor of safety = Allowable shear strength/load per bolt
Factor of safety = 1,053/514 = 2.04

**Strength Design:**
Maximum load = 1.32D + 1.5 $Q_E$ + 1.00L + 0.2S
Substituting, we get maximum load = 1.32 x 750 + 1.5 x 312 = 1,458 lbs.

The bolts are in shear.
Number of bolts = 4
To be conservative, we shall assume load is borne by only 2 bolts.
Load per bolt = 1,458/2 = 729 lbs.
Allowable shear strength of 3/8" bolt for strength design = 1,579.5 lbs. [calculated in 4.6.1]

Factor of safety = Allowable shear strength/load per bolt
Factor of safety = 1,579.5/729 = 2.17

Hence the 3/8" bolts are adequate for the larger electrical cabinet which implies that they are adequate for smaller panels also.

## 5.0 COMPUTER FOR SEISMIC AND STRUCTURAL CALCULATIONS

As explained in section 3.1, the overall structure has been analyzed using a commercial-off -the-shelf (COTS) structural design software RISA 3D. The details of the RISA 3D analysis are detailed in Attachment-1.

The computer characteristics are listed below.

| | |
|---|---|
| Operating System: | 64-bit Windows 10 Professional |
| Computer Identification: | DELLWKSTN4 |
| Software Verification No.: | VV-Vertner W10 |
| | |
| Software Name: | Software Version: |
| RISA 3D | 17.0.2 |

## 6.0 CONCLUSIONS

- The Structural Members of the enclosure are adequate to withstand the specified Natural Phenomena Hazards and the enclosure will maintain its structural integrity under all design conditions for worst case loading (see attachment 1)
- The Structural members of the enclosure are sufficient to lift the enclosure in its specified lift condition (All Equipment is empty and the IXC-150 columns and the TSCR Filter housings are not installed inside). The analysis is a conservative approach as it does not consider strength provided by intermediate members in the process enclosure frame.
- The mounting arrangement (bolts) are adequate for the heavier components being mounted on the walls of the enclosure.

# ATTACHMENT-1: PROCESS ENCLOSURE STRUCTURAL CALCULATIONS

STEVEN M VERTNER
STATE OF WASHINGTON
21880
STRUCTURAL ENGINEER
PROFESSIONAL ENGINEER

8/29/19

ATTACHMENT 1
Calculations

# STRUCTURAL CALCULATIONS
# AVANTech Inc.
# TSCR PROCESS ENCLOSURE

## Structural Calculations - Table of Contents


| Page # | Description |
|---|---|
| A-B | Scope of work, Assumptions & Conclusions |
| 1 | Tank Farm Seismic Parameters Summary |
| 2 | ASCE 7-10 Structural System Selection |
| 3-4 | Enclosure Seismic Loading Derivation |
| 5-8 | ASCE 7-10 Irregularity Investigation |
| 9-11 | Drift Investigation |
| 12 | ASCE 7-10 Nonbuilding Components/Structures Requirements |
| 13-14 | IXC-150 Ion Exchange Seismic Force Derivation |
| 15-19 | TK-550 Delay Tank & Delay Tank Shielding Seismic Force Derivation |
| 20-21 | WP-FLT-325 A/B Filter Tank Seismic Force Derivation |
| 22 | Other Non-Building Components – Process Enclosure |
| 23-24 | Piping System – Seismic Force Derivation |
| 25-26 | Gamma Monitors – Seismic Force Derivation |
| 27-28 | Electrical Cabinets – Seismic Force Derivation |
| 29-30 | Air Receiver Tank – Seismic Force Derivation |
| 31 | Hose Shielding Components |
| 32-37 | Hose Shielding – Seismic Force Derivation |
| 38-40 | Roof, Wall, & Floor Dead Load Derivation |
| 41-43 | Vertical Lateral Load Distribution Analysis |
| 44 | Wind Loading – Main Wind Force Resisting System |
| 45-49 | Wind Loading – Components and Cladding |
| 50-51 | Risa 3D Model – General Configuration |
| 52 | Roof Live Load |
| 53 | Major Framing Sizes |
| 54 | Platform Live Loads |
| 55 | Roof Snow Load |
| 56 | Building Dead Load |
| 57-58 | Wind Load Cases – Not All Shown |
| 59 | Equipment Loading |
| 60-62 | Seismic Forces – Trunnions |
| 63-64 | Seismic Loading X & Z Directions with Reactions |
| 65-72 | Basic Load Cases and Load Combinations Per ASCE 7-10 |
| 73-76 | Column LRFD Envelope Moments and Axial Forces, AISC Envelope Check |
| 77-135 | Tube Connection Design |

**Table of Contents Continued**


| | |
|---|---|
| 136-154 | Liner Plate Analysis |
| 155-159 | Drift Check Including Liner Plates |
| 160-161 | Base Reactions for Embedment Design |
| 162-164 | Process Enclosure Under Vacuum Loading – Major Framing Check |


**Purpose of Calculations:**

Design the TSCR Process Enclosure for the structural requirements of Reference 3 below.

**Assumptions:**

1. All Weights C.G. for Non-Building Components are supplied by AVANTech.
2. Skid lifting analysis, including configuration of lift points and clevis design, are by others and not within the design scope of these calculations.

**References:**

1. ASCE 7-10, Minimum Design Loads for Buildings and Other Structures
2. IBC 2015
3. RPP SPEC 61910-REV 01, Project TD101 Tank Side Cesium Removal Technology Demonstration System Specification.
4. TFC-ENG-STD-06, Rev D-0, "Design Loads for Tank Farm Facilities" dated 9/28/2017.
5. Document Number 66749-001-RFI-005 "Update of Seismic Design Parameters from Soil Site Class C to Soil Site Class D"
6. Nonstructural Component or Nonbuilding Structure article by Robert Bachman, SE & Susan Dowty, SE, April 2008 Edition of Building Safety Journal
7. SSRC Guide 2009 Chapter 4
8. ANSI/AISC 341-16 "Seismic Provisions for Structural Steel Buildings"
9. CIDECT Construction with Hollow Steel Sections, Design Guide 3, 2nd Edition 2009.

**Design Forces:**

1. Seismic and Wind Forces Per Reference 4 & 5.

**Conclusions**

1.) These calculations have verified the configuration and the main framing member sizes which comprise the structural system of the TSCR Process Enclosure.

| | | | |
|---|---|---|---|
| client | Avantech | by SMV | sheet no. 1 |
| project | TSCR Process Enclosure | date 2/19 | |
| location | Hanford | checked | job no. |
| subject | Tank Farm Site Seismic Design Parameters | date | 39001 |

From Reference 5, Document Number 66749-001-RFI-005 "Update of Seismic Design Parameters from Soil Site Class C to Soil Site Class D"

## Summary of Seismic Parameters

| Seismic Parameter | Description | TFC-ENG-STD-06 | Value: RPP-RPT-27570 | Preliminary Geotechnical Report | Calculation for Soil Site Class C | Calculation for Soil Site Class D |
|---|---|---|---|---|---|---|
| IBC | | 2015 | 2000 | 2015 | 2015 | 2015 |
| ASCE 7 | | ASCE 7-10 | ASCE 7-98 | ASCE 7-10 | ASCE 7-10 | ASCE 7-10 |
| Seismic Design Criteria (SDC) | | SDC-1 and SDC-2 | N/A | N/A | SDC-2 | SDC-2 |
| Seismic Design Category | | D | N/A | N/A | D | D |
| Soil Site Class | | C | C | D | C | D |
| $S_S$ | Spectral Response acceleration for Short Periods | Not given | Not given | 0.41g (h) | 0.735g (h)<br>0.432g (v) | 0.735g (h)<br>0.432g (v) |
| $S_1$ | Spectral Response Acceleration at 1-second Period | Not given | Not given | 0.16g (h) | 0.173g (h)<br>0.089g (v) | 0.173g (h)<br>0.089g (v) |
| $F_a$ | Site Coefficient | Not given | 1.21 | 1.47 (h) | 1.2[1] | 1.212 (h)<br>1.454 (v) |
| $F_v$ | Site Coefficient | Not given | 1.66[1] | 2.15 (h) | 1.66[1] | 2.108 (h)<br>2.400 (v) |
| $S_{MS}$ | MCER Spectral Response Acceleration for Short Periods | Not given | Not given | 0.61g (h) | 0.882g (h)<br>0.519g (v) | 0.891g (h)<br>0.628g (v) |
| $S_{M1}$ | MCER Spectral Response Acceleration for 1-second Period | Not given | Not given | 0.35g (h) | 0.288g (h)<br>0.147g (v) | 0.365g (h)<br>0.214g (v) |
| $S_{DS}$ | Design Spectral Response Acceleration for Short Periods | 0.588g (h)<br>0.346g (v) | 0.588g (h)<br>0.346g (v) | 0.4g (h) | 0.588g (h)<br>0.346g (v) | 0.594g (h)<br>0.419g (v) |
| $S_{D1}$ | Design Spectral Response Acceleration for 1-second Period | 0.192g (h)<br>0.098g (v) | 0.192g (h)<br>0.098g (v) | 0.23g (h) | 0.192g (h)<br>0.098g (v) | 0.244g (h)<br>0.142g (v) |

Nomenclature:

(h): horizontal

(v): vertical

Notes:

1. No change exists between ASCE 7-98 to ASCE 7-10 for Fa or Fvvalues

| client | Avantech | by SMV | sheet no. 2 |
|---|---|---|---|
| project | TSCR Process Enclosure | date 2/19 | |
| location | Hanford | checked | job no. |
| subject | ASCE 7-10 Process Enclosure Structural System Selection | date | 39001 |

**Table 15.4-1 Seismic Coefficients for Nonbuilding Structures Similar to Buildings**

| Nonbuilding Structure Type | Detailing Requirements | $R$ | $\Omega_0$ | $C_d$ | Structural System and Structural Height, $h_n$, Limits (ft)[a] B | C | D | E | F |
|---|---|---|---|---|---|---|---|---|---|
| Steel storage racks | 15.5.3 | 4 | 2 | 3.5 | NL | NL | NL | NL | NL |
| Building frame systems: | | | | | | | | | |
| Steel special concentrically braced frames | AISC 341 | 6 | 2 | 5 | NL | NL | 160 | 160 | 100 |
| Steel ordinary concentrically braced frame | AISC 341 | 3¼ | 2 | 3¼ | NL | NL | 35[b] | 35[b] | NP[b] |
| With permitted height increase | AISC 341 | 2½ | 2 | 2½ | NL | NL | 160 | 160 | 100 |
| With unlimited height | AISC 360 | 1.5 | 1 | 1.5 | NL | NL | NL | NL | NL |
| Moment-resisting frame systems: | | | | | | | | | |
| Steel special moment frames | AISC 341 | 8 | 3 | 5.5 | NL | NL | NL | NL | NL |
| Special reinforced concrete moment frames | 14.2.2.6 & ACI 318, including Chapter 21 | 8 | 3 | 5.5 | NL | NL | NL | NL | NL |
| Steel intermediate moment frames | AISC 341 | 4.5 | 3 | 4 | NL | NL | 35[c,d] | NP[c,d] | NP[c,d] |
| With permitted height increase | AISC 341 | 2.5 | 2 | 2.5 | NL | NL | 160 | 160 | 100 |
| With unlimited height | AISC 341 | 1.5 | 1 | 1.5 | NL | NL | NL | NL | NL |
| Intermediate reinforced concrete moment frames | ACI 318, including Chapter 21 | 5 | 3 | 4.5 | NL | NL | NP | NP | NP |
| With permitted height increase | ACI 318, including Chapter 21 | 3 | 2 | 2.5 | NL | NL | 50 | 50 | 50 |
| With unlimited height | ACI 318, including Chapter 21 | 0.8 | 1 | 1 | NL | NL | NL | NL | NL |
| Steel ordinary moment frames | AISC 341 | 3.5 | 3 | 3 | NL | NL | NP[c,d] | NP[c,d] | NP[c,d] |
| With permitted height increase | AISC 341 | 2.5 | 2 | 2.5 | NL | NL | 100 | 100 | NP[c,d] |
| With unlimited height | AISC 360 | 1 | 1 | 1 | NL | NL | NL | NL | NL |
| Ordinary reinforced concrete moment frames | ACI 318, excluding Chapter 21 | 3 | 3 | 2.5 | NL | NP | NP | NP | NP |
| With permitted height increase | ACI 318, excluding Chapter 21 | 0.8 | 1 | 1 | NL | NL | 50 | 50 | 50 |

[a]NL = no limit and NP = not permitted.
[b]Steel ordinary braced frames are permitted in pipe racks up to 65 ft (20 m).
[c]Steel ordinary moment frames and intermediate moment frames are permitted in pipe racks up to a height of 65 ft (20 m) where the moment joints of field connections are constructed of bolted end plates.
[d]Steel ordinary moment frames and intermediate moment frames are permitted in pipe racks up to a height of 35 ft (11 m).

| | | | |
|---|---|---|---|
| client | Avantech | by SMV | sheet no. 3 |
| project | TSCR Process Enclosure | date 2/19 | |
| location | Hanford | checked | job no. |
| subject | Process Skid Enclosure Seismic Force Calculation | date | 39001 |

**Seismic Force Calculation** (Per 2015 IBC & ASCE 7-10)

Nonbuilding Structure, OMF System Similar to Building

| | | | |
|---|---|---|---|
| Risk Category | IV | TFC-ENG-STD-06 Table 5, SDC-2, Limit State C | |
| Site Class | D | Per TFC-ENG-STD-06, Section 3.5.5.2 | |
| $S_S$ = | 0.7350 | For Site Location | |
| $S_1$ = | 0.1730 | For Site Location | for SDC see SDS & SD1 below |
| $F_a$ = | 1.212 | IBC Table 1613.3.3(1) | |
| $F_v$ = | 2.108 | IBC Table 1613.3.3(2) | |
| $S_{MS}=F_a*S_S$= | 0.891 | | |
| $S_{M1}=F_v*S_1$= | 0.365 | | |
| $S_{DS}=2/3*S_{MS}$= | 0.594 | SDC D | TFC-ENG-STD-06 Section 3.5.5.2 |
| $S_{D1}=2/3*S_{M1}$= | 0.243 | SDC D | TFC-ENG-STD-06 Section 3.5.5.2 |
| $I_e$= | 1.5 | ASCE 7-10 Table 1.5-2 | |
| R= | 2.5 | ASCE 7-10, Table 15.4-1 - OMF with Height Increase | |
| Limit State "C" Modifier= | 1.2 | TFC-ENG-STD-06 Table 5, SDC-2, Limit State C | |
| R= | 2.08 | ASCE 7-10, Table 15.4-1 - OMF with Height Increase | |
| $\Omega_o$= | 2 | ASCE 7-10, Table 15.4-1 - OMF with Height Increase | |
| **Type of Structure** | Building | **Type "NonBuilding" or "Building"** | |
| $V=C_S*W$ | | USE | [ASCE Eq 12.8-1] |
| $C_S=S_{DS}/(R/I)$= | 0.43 | | [ASCE Eq 12.8-2] |

**Check Aproximate Fundamental Period per ASCE 7-10 15.4.4**

| | | | |
|---|---|---|---|
| $C_t$= | 0.028 | $h_n$= | 12.50 ft |
| x= | 0.8 | $T_L$= | 6.00 sec |
| $T=C_t*h_n^x$= | 0.211 sec | $T_L$= ASCE Fig 22-5 | |

Check period using RISA structural model:

| | | |
|---|---|---|
| RISA calculated period, T= | 0.266 sec | See Natural Frequency Calculation |
| Use period, T= | 0.266 sec | |

The value of Cs from Eq 12.8-2 need not exceed :

$C_S=S_{D1}/(T(R/I))$ ; for $T<T_L$ [ASCE Eq 12.8-3]

$C_S=(S_{D1}*T_L)/(T^2(R/I))$ ; for T>TL [ASCE Eq 12.8-4]

$C_S$= 0.66

The value of Cs shall not be less than : $0.044*S_{DS}*I_e$, or 0.03

$C_S$> 0.04 [ASCE Eq 15.4-1]

In addition, for structures located where $S_1$ is equal to or greater than 0.6g, $C_S$ shall not be less than:

$C_S=0.5*S_1/(R/I))$= NA S1<.6 [ASCE Eq 12.8-6]

In addition, for rigid (T<.06) non-building structures:

$V=0.30*S_{DS}*I*W$= NA T>.06 [ASCE Eq 15.4-5]

$V=C_S*W$ [ASCE Eq 12.8-1] $E=E_h+E_v$ [ASCE Eq 12.4-1]

$E_h=\rho Q_E$ [ASCE Eq 12.4-3] $E_v=0.2*S_{DS}*D$ [ASCE Eq 12.4-4]

$Q_E=V$ Redundancy $\rho$= 1.30 [ASCE Sect 12.3.4.2]

**Seismic load combinations:**

Strength design per ASCE Sect 12.4.2.3

| | | | | |
|---|---|---|---|---|
| $(1.2+0.2S_{DS})D+\rho Q_E+1.0L$ | = 1.32*D | + 1.30*QE | + 1.00L | [ASCE Eq 2.3.2.5] |
| $(0.9-0.2S_{DS})D+\rho Q_E$ | = 0.78*D | + 1.30*QE | | [ASCE Eq 2.3.2.7] |

Allowable stress design per ASCE Sect 12.4.3.2

| | | | | |
|---|---|---|---|---|
| $(1.0+0.14S_{DS})D+0.7\rho Q_E$ | = 1.08*D | + 0.91*QE | | [ASCE Eq 2.4.1.5] |
| $(1.0+0.105S_{DS})D+0.525\rho Q_E+0.75L$ | = 1.06*D | + 0.68*QE | + 0.75L | [ASCE Eq 2.4.1.6b] |
| $(0.6-0.14S_{DS})D+0.7\rho Q_E$ | = 0.52*D | + 0.91*QE | | [ASCE Eq 2.4.1.8] |

Overstrength Combinations per ASCE Sect 12.4.3.2

| | | | | |
|---|---|---|---|---|
| $(1.2+0.2S_{DS})D+\Omega_o Q_E+1.0L$ | = 1.32*D | + 2.00*QE | + 1.00L | [ASCE Eq 2.3.2.5] |
| $(0.9-0.2S_{DS})D+\Omega_o Q_E$ | = 0.78*D | + 2.00*QE | | [ASCE Eq 2.3.2.7] |

| | | | |
|---|---|---|---|
| client | Avantech | by SMV | sheet no. 4 |
| project | TSCR Process Enclosure | date 2/19 | |
| location | Hanford | checked | job no. |
| subject | Process Enclosure Natural Frequency by Risa | date | 39001 |

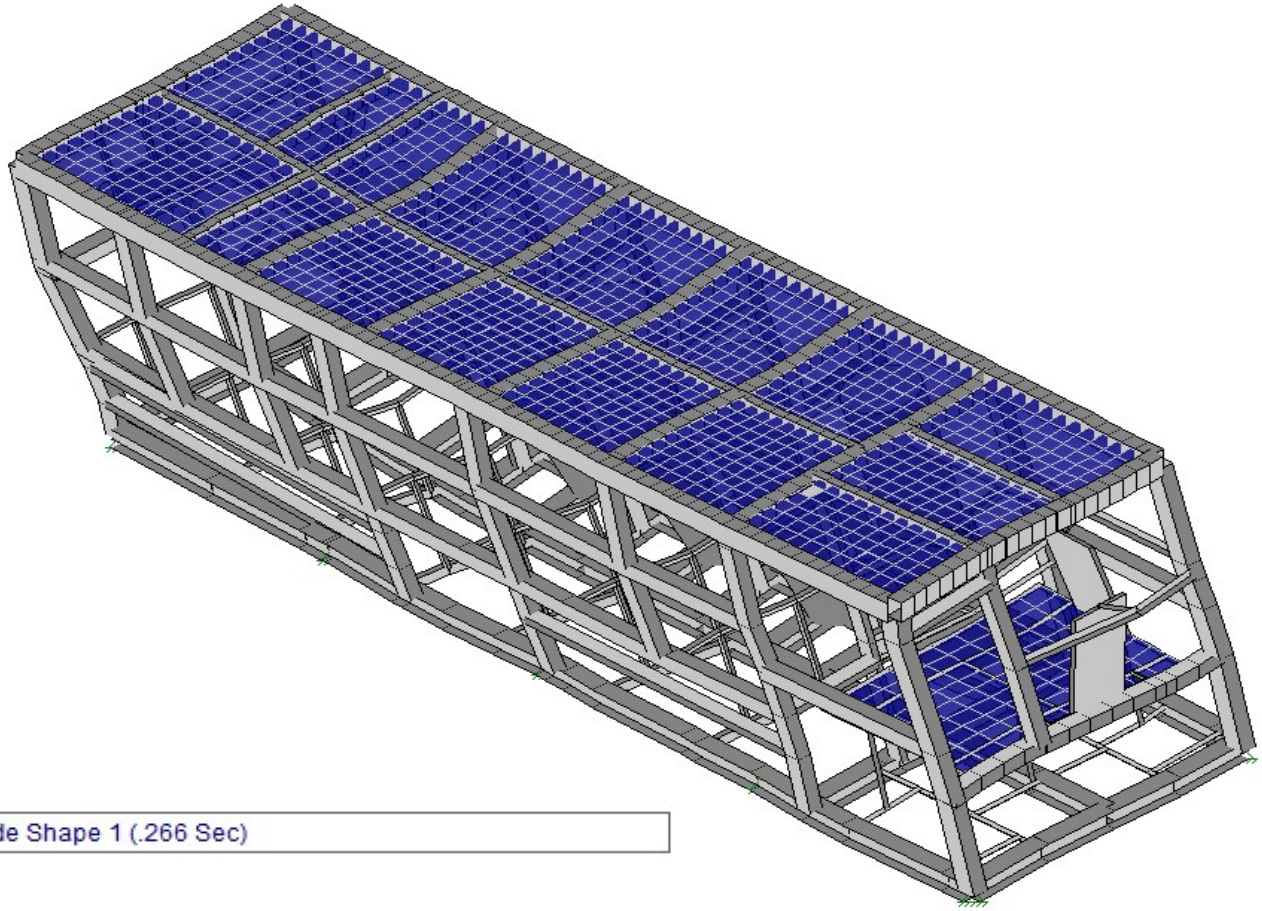

Mode Shape 1 (.266 Sec)

Frequencies and Participation

| | Mode | Freque... | Period (Sec) | SX Par... | SY Par... | SZ Par... |
|---|---|---|---|---|---|---|
| 1 | 1 | 3.763 | .266 | .044 | .686 | 86.735 |
| 2 | 2 | 4.543 | .22 | 2.461 | .143 | .464 |
| 3 | 3 | 4.78 | .209 | 66.037 | | .039 |
| 4 | 4 | 5.981 | .167 | 10.568 | .179 | .043 |
| 5 | 5 | 6.346 | .158 | | .636 | |
| 6 | 6 | 6.404 | .156 | .036 | .062 | |
| 7 | 7 | 6.956 | .144 | 2.037 | 2.43 | .106 |
| 8 | 8 | 7.476 | .134 | 4.604 | 6.382 | .109 |
| 9 | 9 | 8.029 | .125 | .169 | .791 | |
| 10 | 10 | 8.297 | .121 | .061 | .012 | .029 |
| 11 | 11 | 8.349 | .12 | .021 | 2.066 | .025 |
| 12 | 12 | 8.844 | .113 | | .666 | |
| 13 | Totals: | | | 86.042 | 14.055 | 87.559 |

| client | Avantech | by SMV | sheet no. 5 |
|---|---|---|---|
| project | TSCR Process Enclosure | date 2/19 | |
| location | Hanford | checked | job no. |
| subject | ASCE 7-10 Code Requirements - Horizontal and Vertical Irregularities | date | 39001 |

**Table 12.3-1 Horizontal Structural Irregularities**

Check!

| Type | Description | Reference Section | Seismic Design Category Application |
|---|---|---|---|
| 1a. | **Torsional Irregularity:** Torsional irregularity is defined to exist where the maximum story drift, computed including accidental torsion with $A_x = 1.0$, at one end of the structure transverse to an axis is more than 1.2 times the average of the story drifts at the two ends of the structure. Torsional irregularity requirements in the reference sections apply only to structures in which the diaphragms are rigid or semirigid. | 12.3.3.4<br>12.7.3<br>12.8.4.3<br>12.12.1<br>Table 12.6-1<br>16.2.2 | D, E, and F<br>B, C, D, E, and F<br>C, D, E, and F<br>C, D, E, and F<br>D, E, and F<br>B, C, D, E, and F |
| 1b. | **Extreme Torsional Irregularity:** Extreme torsional irregularity is defined to exist where the maximum story drift, computed including accidental torsion with $A_x = 1.0$, at one end of the structure transverse to an axis is more than 1.4 times the average of the story drifts at the two ends of the structure. Extreme torsional irregularity requirements in the reference sections apply only to structures in which the diaphragms are rigid or semirigid. | 12.3.3.1<br>12.3.3.4<br>12.3.4.2<br>12.7.3<br>12.8.4.3<br>12.12.1<br>Table 12.6-1<br>16.2.2 | E and F<br>D<br>D<br>B, C, and D<br>C and D<br>C and D<br>D<br>B, C, and D |
| 2. | **Reentrant Corner Irregularity:** Reentrant corner irregularity is defined to exist where both plan projections of the structure beyond a reentrant corner are greater than 15% of the plan dimension of the structure in the given direction. | 12.3.3.4<br>Table 12.6-1 | D, E, and F<br>D, E, and F |
| 3. | **Diaphragm Discontinuity Irregularity:** Diaphragm discontinuity irregularity is defined to exist where there is a diaphragm with an abrupt discontinuity or variation in stiffness, including one having a cutout or open area greater than 50% of the gross enclosed diaphragm area, or a change in effective diaphragm stiffness of more than 50% from one story to the next. | 12.3.3.4<br>Table 12.6-1 | D, E, and F<br>D, E, and F |
| 4. | **Out-of-Plane Offset Irregularity:** Out-of-plane offset irregularity is defined to exist where there is a discontinuity in a lateral force-resistance path, such as an out-of-plane offset of at least one of the vertical elements. | 12.3.3.3<br>12.3.3.4<br>12.7.3<br>Table 12.6-1<br>16.2.2 | B, C, D, E, and F<br>D, E, and F<br>B, C, D, E, and F<br>D, E, and F<br>B, C, D, E, and F |
| 5. | **Nonparallel System Irregularity:** Nonparallel system irregularity is defined to exist where vertical lateral force-resisting elements are not parallel to the major orthogonal axes of the seismic force-resisting system. | 12.5.3<br>12.7.3<br>Table 12.6-1<br>16.2.2 | C, D, E, and F<br>B, C, D, E, and F<br>D, E, and F<br>B, C, D, E, and F |

**Table 12.3-2 Vertical Structural Irregularities**

| Type | Description | Reference Section | Seismic Design Category Application |
|---|---|---|---|
| 1a. | **Stiffness-Soft Story Irregularity:** Stiffness-soft story irregularity is defined to exist where there is a story in which the lateral stiffness is less than 70% of that in the story above or less than 80% of the average stiffness of the three stories above. | Table 12.6-1 | D, E, and F |
| 1b. | **Stiffness-Extreme Soft Story Irregularity:** Stiffness-extreme soft story irregularity is defined to exist where there is a story in which the lateral stiffness is less than 60% of that in the story above or less than 70% of the average stiffness of the three stories above. | 12.3.3.1<br>Table 12.6-1 | E and F<br>D, E, and F |
| 2. | **Weight (Mass) Irregularity:** Weight (mass) irregularity is defined to exist where the effective mass of any story is more than 150% of the effective mass of an adjacent story. A roof that is lighter than the floor below need not be considered. | Table 12.6-1 | D, E, and F |
| 3. | **Vertical Geometric Irregularity:** Vertical geometric irregularity is defined to exist where the horizontal dimension of the seismic force-resisting system in any story is more than 130% of that in an adjacent story. | Table 12.6-1 | D, E, and F |
| 4. | **In-Plane Discontinuity in Vertical Lateral Force-Resisting Element Irregularity:** In-plane discontinuity in vertical lateral force-resisting elements irregularity is defined to exist where there is an in-plane offset of a vertical seismic force-resisting element resulting in overturning demands on a supporting structural elements. | 12.3.3.3<br>12.3.3.4<br>Table 12.6-1 | B, C, D, E, and F<br>D, E, and F<br>D, E, and F |
| 5a. | **Discontinuity in Lateral Strength–Weak Story Irregularity:** Discontinuity in lateral strength–weak story irregularity is defined to exist where the story lateral strength is less than 80% of that in the story above. The story lateral strength is the total lateral strength of all seismic-resisting elements sharing the story shear for the direction under consideration. | 12.3.3.1<br>Table 12.6-1 | E and F<br>D, E, and F |
| 5b. | **Discontinuity in Lateral Strength–Extreme Weak Story Irregularity:** Discontinuity in lateral strength–extreme weak story irregularity is defined to exist where the story lateral strength is less than 65% of that in the story above. The story strength is the total strength of all seismic-resisting elements sharing the story shear for the direction under consideration. | 12.3.3.1<br>12.3.3.2<br>Table 12.6-1 | D, E, and F<br>B and C<br>D, E, and F |

**12.8.4.2 Accidental Torsion.** Where diaphragms are not flexible, the design shall include the inherent torsional moment ($M_t$) resulting from the location of the structure masses plus the accidental torsional moments ($M_{ta}$) caused by assumed displacement of the center of mass each way from its actual location by a distance equal to 5% of the dimension of the structure perpendicular to the direction of the applied forces.

Where earthquake forces are applied concurrently in two orthogonal directions, the required 5% displacement of the center of mass need not be applied in both of the orthogonal directions at the same time, but shall be applied in the direction that produces the greater effect.

**12.8.4.3 Amplification of Accidental Torsional Moment.** Structures assigned to Seismic Design Category C, D, E, or F, where Type 1a or 1b torsional irregularity exists as defined in Table 12.3-1 shall have the effects accounted for by multiplying $M_{ta}$ at each level by a torsional amplification factor ($A_x$) as illustrated in Fig. 12.8-1 and determined from the following equation:

$$A_x = \left(\frac{\delta_{max}}{1.2\delta_{avg}}\right)^2 \qquad (12.8\text{-}14)$$

where

$\delta_{max}$ = the maximum displacement at level $x$ computed assuming $A_x = 1$ (in. or mm)

$\delta_{avg}$ = the average of the displacements at the extreme points of the structure at level $x$ computed assuming $A_x = 1$ (in. or mm)

The torsional amplification factor ($A_x$) shall not be less than 1 and is not required to exceed 3.0. The more severe loading for each element shall be considered for design.

| Type | Description |
|---|---|
| 1a. | **Torsional Irregularity:** Torsional irregularity is defined to exist where the maximum story drift, computed including accidental torsion with $A_x = 1.0$, at one end of the structure transverse to an axis is more than 1.2 times the average of the story drifts at the two ends of the structure. Torsional irregularity requirements in the reference sections apply only to structures in which the diaphragms are rigid or semirigid. |

| | | | |
|---|---|---|---|
| client | Avantech | by SMV | sheet no. 7 |
| project | TSCR Process Enclosure | date 5/19 | |
| location | Hanford | checked | job no. |
| subject | ASCE 7-10 Code Requirements - Torsional Irregularity Check | date | 39001 |

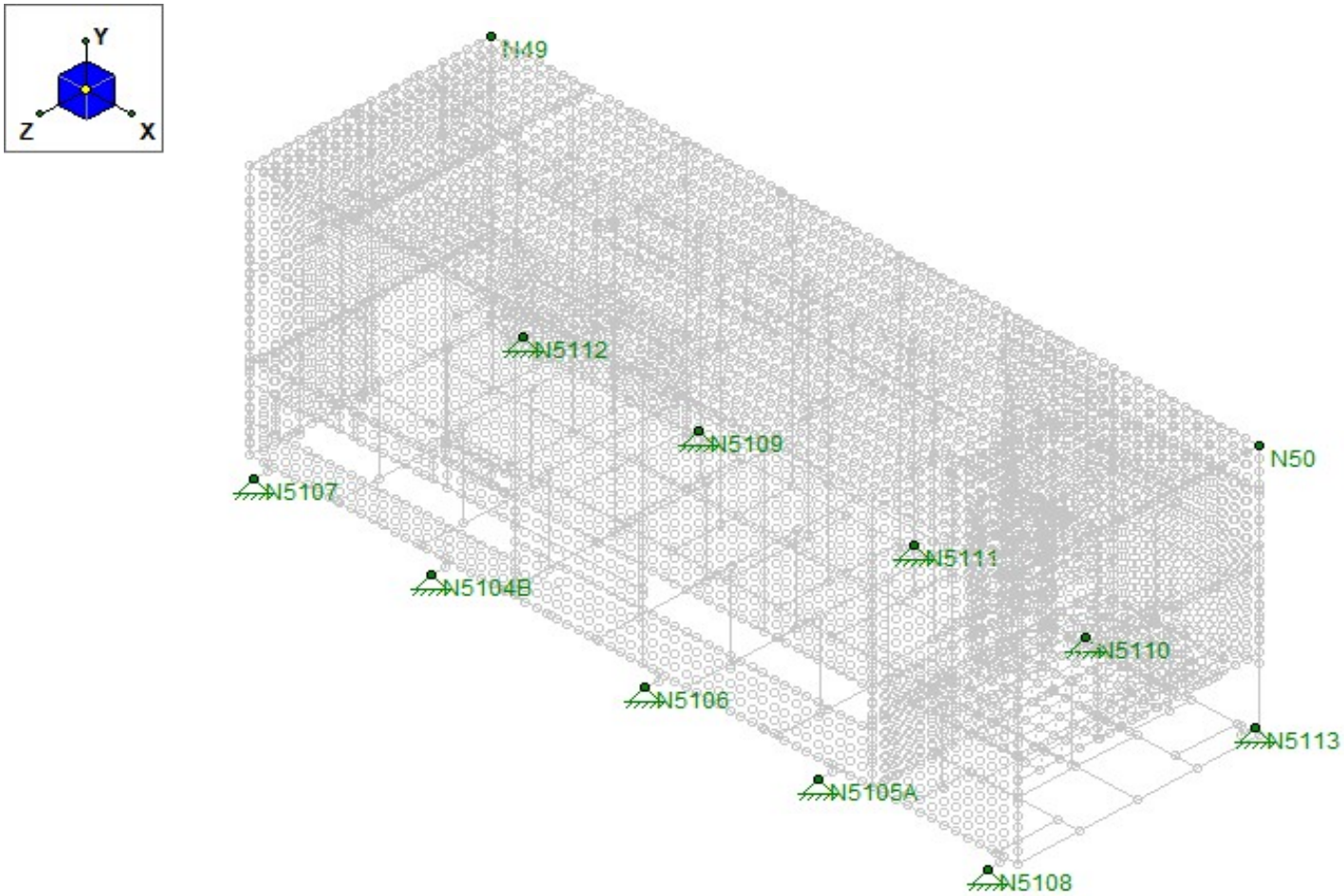


Results for LC 90, ASCE Strength 5 (b)
Member Axial Forces (k)

Joint Deflections (By Combination)

| | L... | Joint Label | X [in] | Y [in] | Z [in] | X Rotat... | Y Rotat... | Z Rotat... |
|---|---|---|---|---|---|---|---|---|
| 49 | 90 | N49 | .014 | -.004 | .502 | 2.567e-03 | -2.029e-04 | -3.645e-04 |
| 50 | 90 | N50 | -.005 | .002 | .496 | 2.592e-03 | 2.049e-04 | 2.792e-04 |

Drift at Node N49= 0.502 in 101%
Drift at Node N50= 0.496 in 99%
Average= 0.499 in

Max Drift in "Z" Direction less than 120% Avg = No Torsional Irregularity!

| | | | |
|---|---|---|---|
| client | Avantech | by SMV | sheet no. 8 |
| project | TSCR Process Enclosure | date 5/19 | |
| location | Hanford | checked | job no. |
| subject | ASCE 7-10 Code Requirements - Torsional Irregularity Check | date | 39001 |

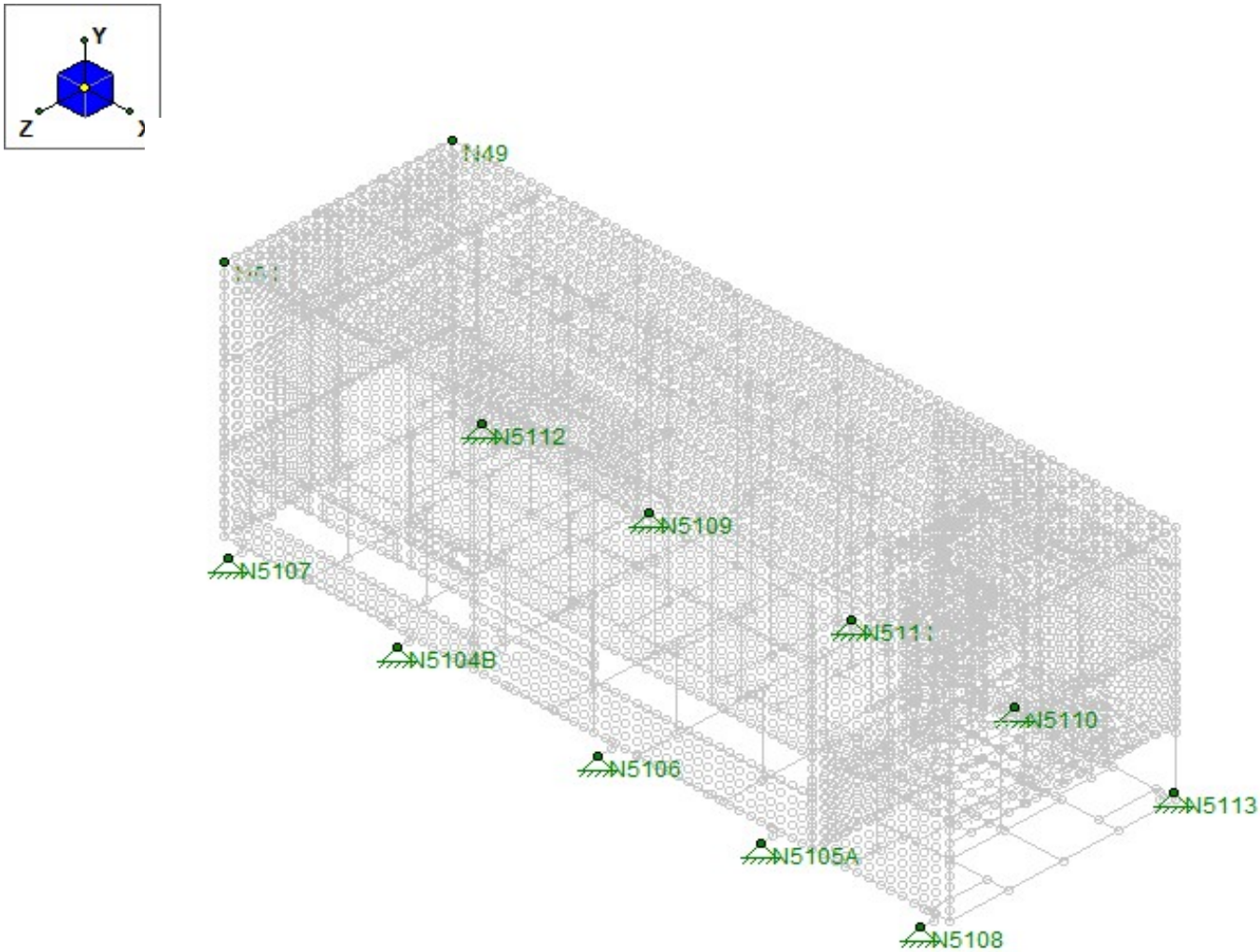


Joint Deflections (By Combination)

| | L... | Joint Label | X [in] | Y [in] | Z [in] | X Rotat... | Y Rotat... | Z Rotat... |
|---|---|---|---|---|---|---|---|---|
| 49 | 89 | N49 | .331 | .006 | .073 | 5.574e-04 | -4.025e-04 | -1.149e-03 |
| 50 | 89 | N50 | .322 | -.02 | .221 | 1.354e-03 | -2.839e-04 | -8.441e-04 |
| 51 | 89 | N51 | .274 | .009 | .072 | -1.941e-04 | -5.01e-04 | -1.297e-03 |

Drift at Node N49= 0.331 in 109%

Drift at Node N51= 0.274 in 91%

Average= 0.303 in

Max Drift in "X" Direction less than 120% Avg = No Torsional Irregularity!

| | | | |
|---|---|---|---|
| client | Avantech | by SMV | sheet no. 9 |
| project | TSCR Process Enclosure | date 2/19 | |
| location | Hanford | checked | job no. |
| subject | ASCE 7-10 Code Requirements - Drift Check | date | 39001 |

Note: If the TSCR Process Enclosure is treated as a non-building structure, per ASCE 7 Section 15.4.4, the drift limits for a building structure per ASCE Section 12.12.1 do not need to apply. However, excessive deflections should be avoided for the interconnected piping, especially for a Risk Category IV Structure. Therefore, the structural framing will be designed to avoid exceeding the drift limits set for a OMF Building.

**15.4.5 Drift Limitations.** The drift limitations of Section 12.12.1 need not apply to nonbuilding structures if a rational analysis indicates they can be exceeded without adversely affecting structural stability or attached or interconnected components and elements such as walkways and piping. P-delta effects shall be considered where critical to the function or stability of the structure.

**Table 12.12-1 Allowable Story Drift, $\Delta_a$[a,b]**

| Structure | Risk Category I or II | Risk Category III | Risk Category IV |
|---|---|---|---|
| Structures, other than masonry shear wall structures, four stories or less above the base as defined in Section 11.2, with interior walls, partitions, ceilings, and exterior wall systems that have been designed to accommodate the story drifts. | $0.025h_{sx}$[c] | $0.020h_{sx}$ | $0.015h_{sx}$ |
| Masonry cantilever shear wall structures[d] | $0.010h_{sx}$ | $0.010h_{sx}$ | $0.010h_{sx}$ |
| Other masonry shear wall structures | $0.007h_{sx}$ | $0.007h_{sx}$ | $0.007h_{sx}$ |
| All other structures | $0.020h_{sx}$ | $0.015h_{sx}$ | $0.010h_{sx}$ |

[a] $h_{sx}$ is the story height below level $x$.
[b] For seismic force-resisting systems solely comprising moment frames in Seismic Design Categories D, E, and F, the allowable story drift shall comply with the requirements of Section 12.12.1.1.
[c] There shall be no drift limit for single-story structures with interior walls, partitions, ceilings, and exterior wall systems that have been designed to accommodate the story drifts. The structure separation requirement of Section 12.12.3 is not waived.
[d] Structures in which the basic structural system consists of masonry shear walls designed as vertical elements cantilevered from their base or foundation support that are so constructed that moment transfer between shear walls (coupling) is negligible.

**12.3.4.1 Conditions Where Value of $\rho$ is 1.0.** The value of $\rho$ is permitted to equal 1.0 for the following:

1. Structures assigned to Seismic Design Category B or C;
2. Drift calculation and P-delta effects;
3. Design of nonstructural components;
4. Design of nonbuilding structures that are not similar to buildings;
5. Design of collector elements, splices, and their connections for which the seismic load effects including overstrength factor of Section 12.4.3 are used;
6. Design of members or connections where the seismic load effects including overstrength factor of Section 12.4.3 are required for design;
7. Diaphragm loads determined using Eq. 12.10-1;
8. Structures with damping systems designed in accordance with Chapter 18; and
9. Design of structural walls for out-of-plane forces, including their anchorage.

**12.8.6 Story Drift Determination.** The design story drift ($\Delta$) shall be computed as the difference of the deflections at the

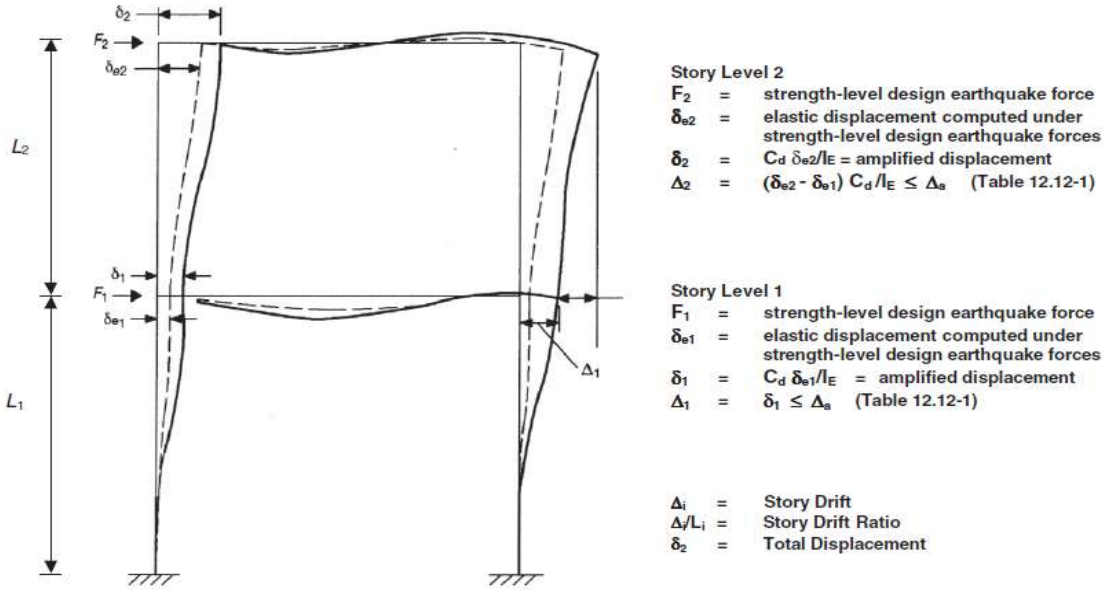


FIGURE 12.8-2 Story Drift Determination

centers of mass at the top and bottom of the story under consideration. See Fig. 12.8-2. Where centers of mass do not align vertically, it is permitted to compute the deflection at the bottom of the story based on the vertical projection of the center of mass at the top of the story. Where allowable stress design is used, $\Delta$ shall be computed using the strength level seismic forces specified in Section 12.8 without reduction for allowable stress design.

For structures assigned to Seismic Design Category C, D, E, or F having horizontal irregularity Type 1a or 1b of Table 12.3-1, the design story drift, $\Delta$, shall be computed as the largest difference of the deflections of vertically aligned points at the top and bottom of the story under consideration along any of the edges of the structure.

The deflection at level $x$ ($\delta_x$) (in. or mm) used to compute the design story drift, $\Delta$, shall be determined in accordance with the following equation:

$$\delta_x = \frac{C_d \delta_{xe}}{I_e} \qquad (12.8\text{-}15)$$

where

$C_d$ = the deflection amplification factor in Table 12.2-1
$\delta_{xe}$ = the deflection at the location required by this section determined by an elastic analysis
$I_e$ = the importance factor determined in accordance with Section 11.5.1

| | | | |
|---|---|---|---|
| client | Avantech | by SMV | sheet no. 11 |
| project | TSCR Process Enclosure | date 5/19 | |
| location | Hanford | checked | job no. |
| subject | ASCE 7-10 Code Requirements - Drift Check | date | 39001 |

**12.12.1.1 Moment Frames in Structures Assigned to Seismic Design Categories D through F.** For seismic force-resisting systems solely comprising moment frames in structures assigned to Seismic Design Categories D, E, or F, the design story drift ($\Delta$) shall not exceed $\Delta_a/\rho$ for any story. $\rho$ shall be determined in accordance with Section 12.3.4.2.

Per ASCE 7-10 Section 12.8.6 - Drift Computation:

| | | |
|---|---|---|
| Per ASCE 12.12.-1 | | |
| Risk Category IV Drift Limit = | $.015h_{SX}$ | *Story Height $h_{SX}$= 11.83 ft |
| Per ASCE 12.12.1.1 $\rho$= | 1.3 | *Center of W8 Base to Center of HSS8 |
| Drift Limit = | 1.64 in | |

| | | |
|---|---|---|
| $C_D$= | **2.5** | OMF, ASCE Table 15.4-1 |
| $I_e$= | **1.5** | Risk Category IV Seismic Importance Factor |
| $\delta_{Xe}$= | **0.50 in** | From Risa 3D Elastic Analysis. |
| $\delta_X$= | **0.84 in** | **Ok, less than drift limit of 1.64 inches** |

Discussion: The Process Enclosure Interior Pressure Vessels could be treated either as a Nonstructural Component, or as a Nonbuilding Structure as discussed in Reference 6 for seismic loading. See Figure 1 from Reference 6 below.

Since the Ion Exchange Columns and Filter Tanks are not free standing vessels, and are supported laterally at the trunnion points, these vessels will be treated as a mechanical nonstructural component. Conservatively, the attachment point "z" in ASCE 7-10 Formula 13.3-1 will taken at the height of the trunnion.

For the Delay Tank, WP-TK-550 and the Filter Tanks, WP-FLT-325 A&B, these vessels are skirt supported free standing vessels. They will be treated as a Nonbuilding Structures, ASCE 7-10 Chapter 15.

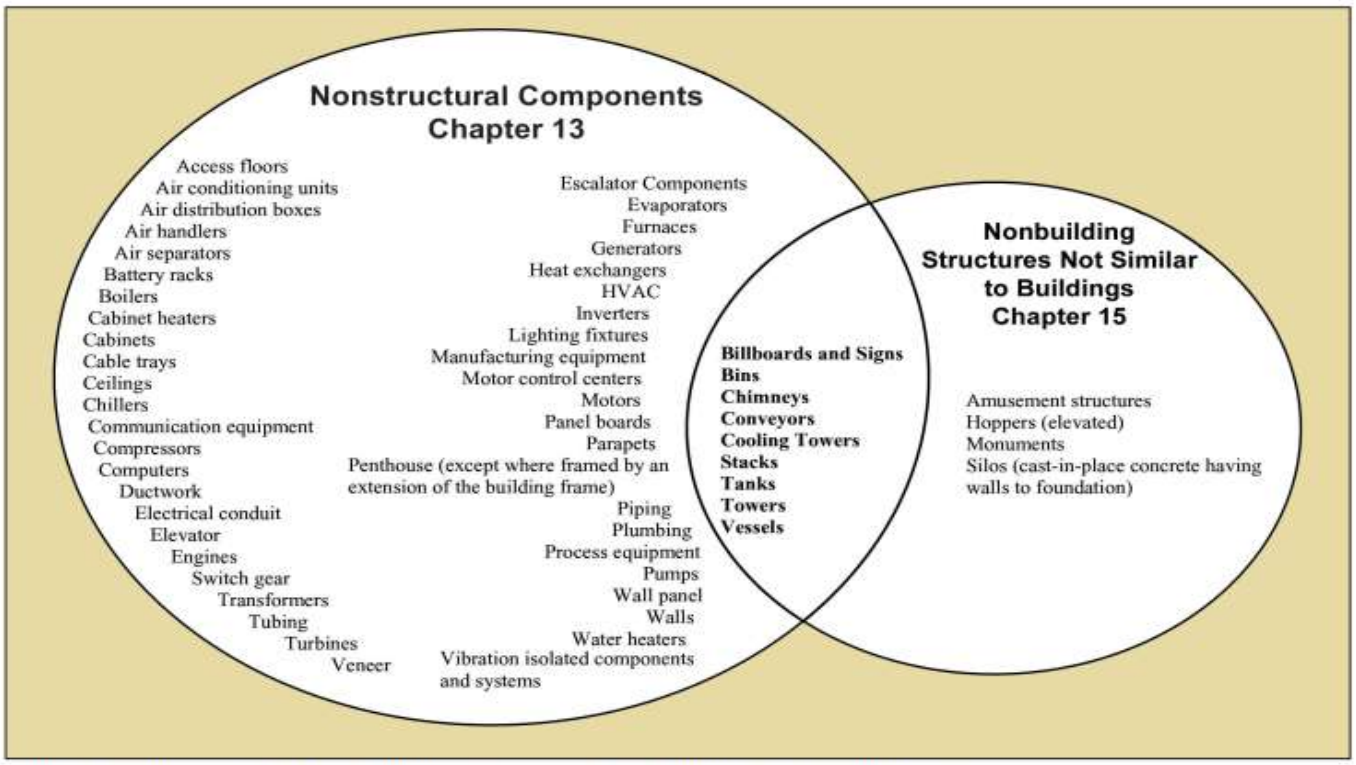


**Figure 1. Intersection of nonstructural components and nonbuilding structures.**

**13.1.5 Application of Nonstructural Component Requirements to Nonbuilding Structures.** Nonbuilding structures (including storage racks and tanks) that are supported by other structures shall be designed in accordance with Chapter 15. Where Section 15.3 requires that seismic forces be determined in accordance with Chapter 13 and values for $R_p$ are not provided in Table 13.5-1 or 13.6-1, $R_p$ shall be taken as equal to the value of $R$ listed in Section 15. The value of $a_p$ shall be determined in accordance with footnote $a$ of Table 13.5-1 or 13.6-1.

| | | | |
|---|---|---|---|
| client | Avantech | by SMV | sheet no. 13 |
| project | TSCR Process Enclosure | date 2/19 | |
| location | Hanford | checked | job no. |
| subject | ICX-150 Seismic Design Force | date | 39001 |

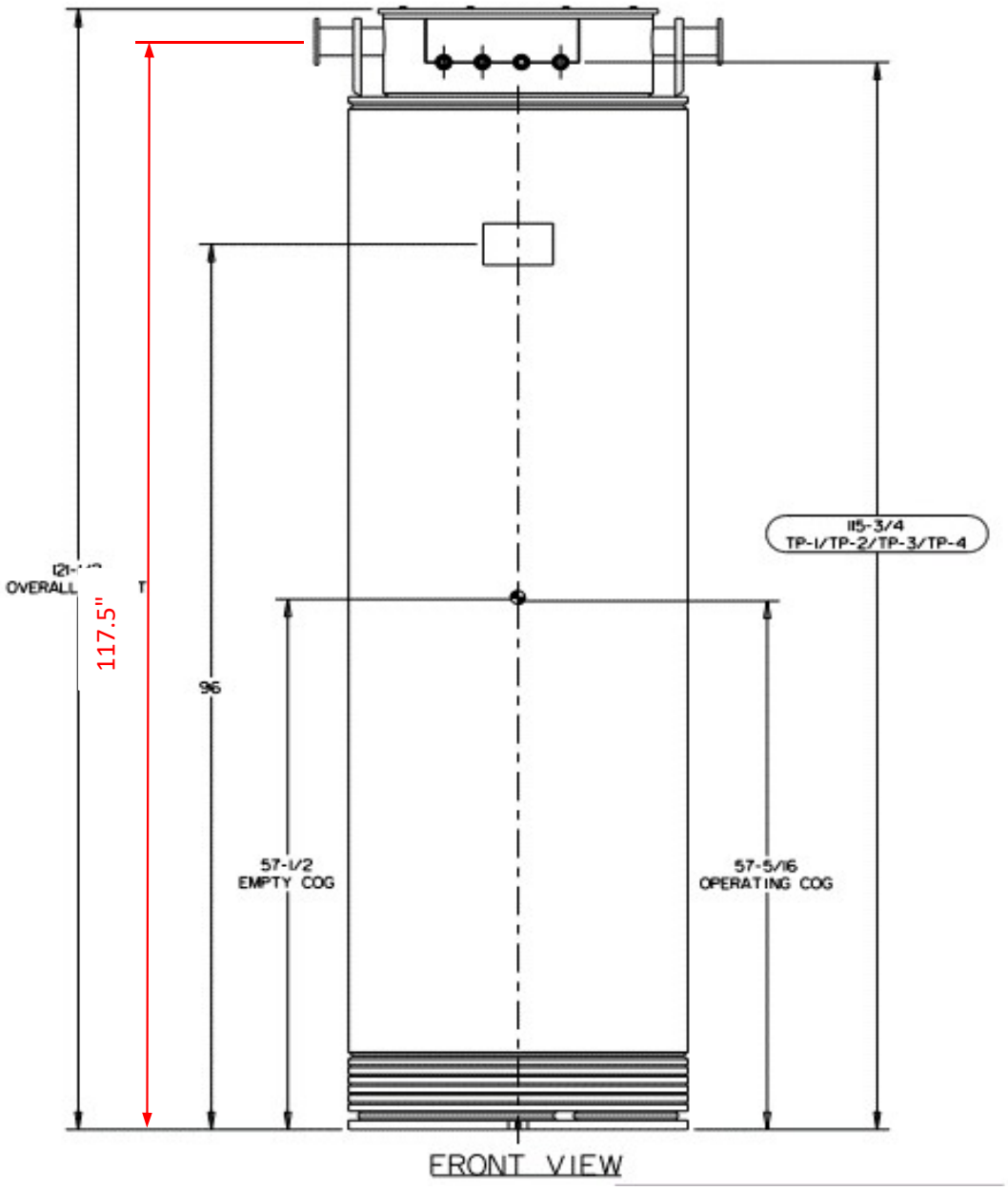


EMPTY WEIGHT: 24,346 LBS
OPERATING WEIGHT: 26,790 LBS

| | | |
|---|---|---|
| Base Frame Height= | 8.0 in | |
| Height to C.G.= | 57.3 in | |
| Height to Attachment Point= | 117.5 in | |
| Total Height from Base "0-0"= | 125.5 in | = 10.46 ft |

# TSCR IXC-150

| | | | |
|---|---|---|---|
| client | Avantech | by SMV | sheet no. 14 |
| project | TSCR Process Enclosure | date 2/19 | |
| location | Hanford | checked | job no. |
| subject | ICX-150 Seismic Design Force | date | 39001 |

**Check ICX-150 as a Mechanical Non-Building Component, See ASCE 7-10 Table 13.6**

**Seismic Force Calculation** (Per ASCE 7-010)

| | | |
|---|---|---|
| Occupancy Category | IV | Per Table 5, TFC-ENG-STD-06 |
| Site Class | D | Per Site Criteria |
| $\rho$= | 1 | ASCE 7-10 Section 13.3.1 |
| $S_{DS}$= | 0.5940 | Per TFC-ENG-STD-06, For Site Class D |
| $I_p$= | 1.5 | ASCE 7-10 Sect 13.1.3 |
| $R_p$= | 2.5 | ASCE 7-10 Table 13.6-1 |
| Limit State "C" Modifier= | 1.2 | TFC-ENG-STD-06 Table 5, SDC-2, Limit State C |
| $R_{pa}$= | 2.08 | ASCE 7-10 Table 13.6-1, Mod. by SDC-2, Limit State C |
| $a_p$= | 1.00 | ASCE 7-10 Table 13.6-1 |
| z= | 10.46 ft | Height in structure of Component Attachment |
| h= | 12.50 ft | Average roof height of structure |
| $\Omega_O$= | 2.5 | Will apply for Concrete Anchorage |

**For Nonstructural Components:**

$F_p=0.4a_pS_{DS}W_p/(R_p/I_p)*(1+2z/h)$= **0.457 Wp** $F_p$=ASCE 7-10 Eq 13.3-1] USE

Fp is not required to be taken as greater than

$F_p=1.6S_{DS}I_pW_p$= 1.426 Wp [ASCE 7-10 Eq 13.3-2]

and shall not be taken less than

$F_p=0.3S_{DS}I_pW_p$= 0.267 Wp [ASCE7-10 Eq 13.3-3]

Wp= 26790 lbs

$F_p$= **12253 lbs** Apply at C.G. Vessel

**Seismic Load Effect:**

$E=E_h+E_v$ [ASCE Eq 12.4-1] $E_h=\rho Q_E$ [ASCE Eq 12.4-3]

$Q_E=F_p$ [ASCE Eq 12.4-3] $E_v=0.2*S_{DS}*D$ [ASCE Eq 13.3]

$\rho$= 1.00 [ASCE Sect 13.3]

**Seismic load combinations:**

Allowable stress design per ASCE Sect 12.4.3.2

| | | | | |
|---|---|---|---|---|
| $(1.0+0.14S_{DS})D+0.7\rho Q_E$ | = 1.08*D | + 0.70*QE | | [ASCE Eq 2.4.1.5] |
| $(1.0+0.10S_{DS})D+0.525\rho Q_E+0.75L$ | = 1.06*D | + 0.53*QE | + 0.75L | [ASCE Eq 2.4.1.6] |
| $(0.6-0.14S_{DS})D+0.7\rho Q_E$ | = 0.52*D | + 0.70*QE | | [ASCE Eq 2.4.1.8] |

Strength design per ASCE Sect 12.4.2.3

| | | | | |
|---|---|---|---|---|
| $(1.2+0.2S_{DS})D+\rho Q_E+1.0L$ | = 1.32*D | + 1.00*QE | + 1.00L | [ASCE Eq 2.3.2.5] |
| $(0.9-0.2S_{DS})D+\rho Q_E$ | = 0.78*D | + 1.00*QE | | [ASCE Eq 2.3.2.7] |

Strength Design with Overstrength Factor Per ASCE Sect 12.4.3.2

| | | | | |
|---|---|---|---|---|
| $(1.2+0.2S_{DS})D+\Omega_O Q_E+1.0L+0.2S$ | = 1.32*D | + 2.50*QE | + 1.00L | + 0.20S |
| $(0.9-0.2S_{DS})D+\Omega_O Q_E$ | = 0.90*D | + 2.50*QE | | |

| | | | |
|---|---|---|---|
| client | Avantech | by SMV | sheet no. 15 |
| project | TSCR Process Enclosure | date 5/19 | |
| location | Hanford | checked | job no. |
| subject | Delay Tank TK-550 Seismic | date | 39001 |

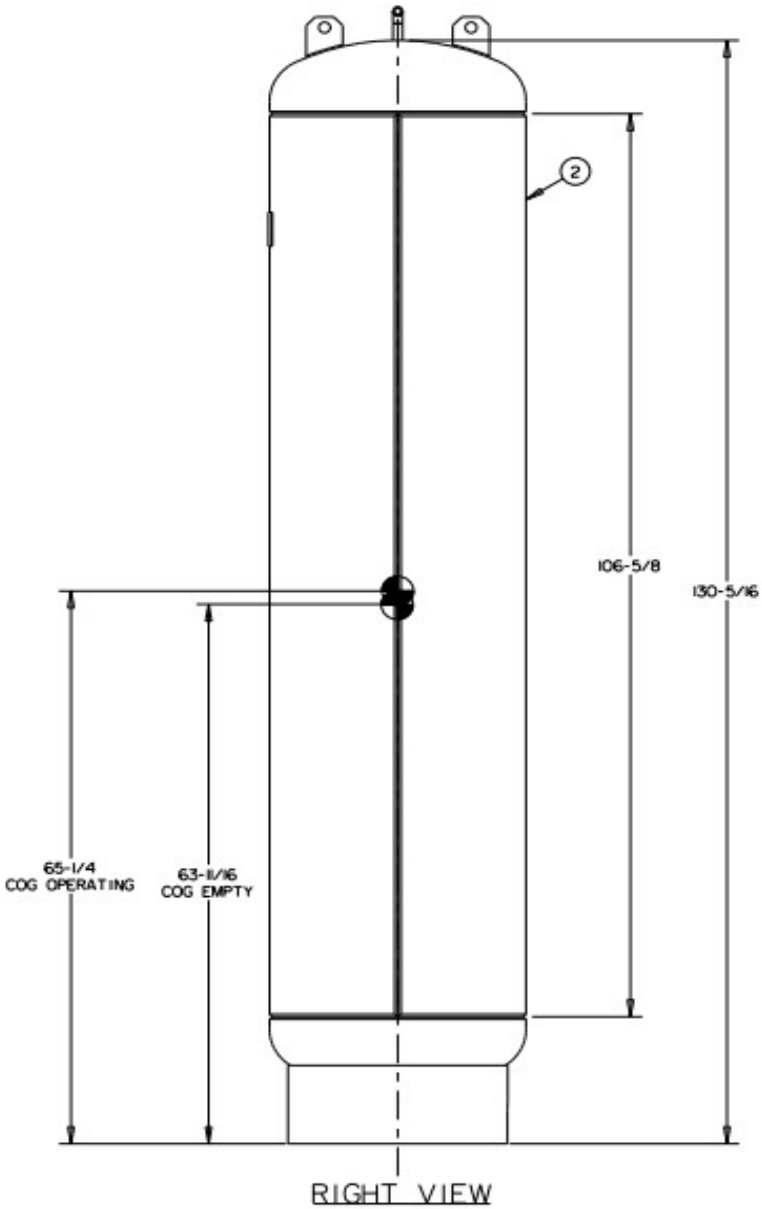


NOTES:
1. EMPTY WEIGHT: 1,515 LBS
OPERATING WEIGHT: 4,687 LBS

| | | |
|---|---|---|
| Base Frame Height= | 8.0 in | |
| Height to C.G.= | 65.3 in | |
| Height to Attachment Point= | 0.0 in | Skirt Mounted at Bottom |
| Total Height from Base "0-0"= | 8.0 in | = 0.67 ft |

# TK-550 DELAY TANK

| | | | |
|---|---|---|---|
| client | Avantech | by SMV | sheet no. 16 |
| project | TSCR Process Enclosure | date 2/19 | |
| location | Hanford | checked | job no. |
| subject | Delay Tank TK-550 Seismic | date | 39001 |

TK-550 Operating Weight= 4.687 k

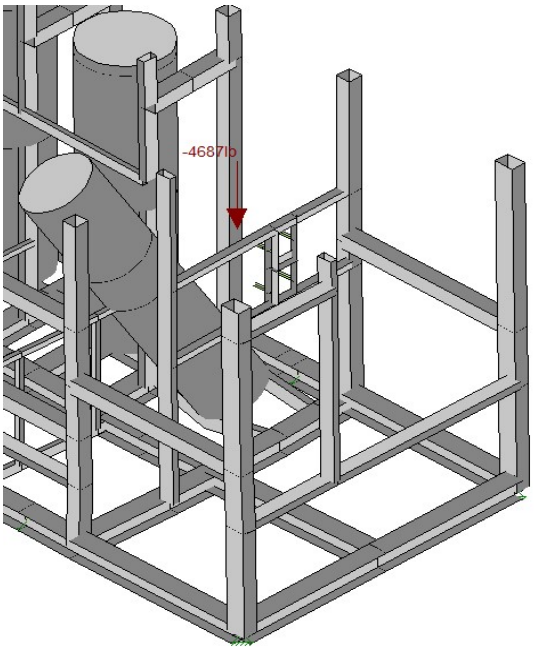


**Natural Frequency per Risa 3D**

Frequencies and Participation

| | Mode | Freque... | Period (Sec) | SX Par... | SY Par... | SZ Par... |
|---|---|---|---|---|---|---|
| 1 | 1 | 4.53 | .22 | | | 85.15 |
| 2 | 2 | 7.67 | .13 | 82.64 | .31 | .13 |
| 3 | 3 | 8.09 | .12 | .47 | .02 | 14.21 |
| 4 | 4 | 8.84 | .11 | | | |
| 5 | 5 | 8.98 | .11 | | | .42 |

**Natural Frequency by Vertical Vessel Formula**

$T=7.78/(10^6)*(H/D)^2*(12wD/t)^{1/2}$

H= 10.9 ft
D= 2.3 ft
t= 0.375 in
W= 4687.0 lbs
w= 432.0 lbs/ft
T= 0.031 sec

Use Risa Natural Frequency which accounts for supporting beams.

$$C_{vx} = \frac{w_x h_x^k}{\sum_{i=1}^{n} w_i h_i^k} \qquad (12.8\text{-}12)$$

where

$C_{vx}$ = vertical distribution factor
$V$ = total design lateral force or shear at the base of the structure (kip or kN)
$w_i$ and $w_x$ = the portion of the total effective seismic weight of the structure ($W$) located or assigned to level $i$ or $x$
$h_i$ and $h_x$ = the height (ft or m) from the base to level $i$ or $x$
$k$ = an exponent related to the structure period as follows:
for structures having a period of 0.5 s or less, $k = 1$
for structures having a period of 2.5 s or more, $k = 2$
for structures having a period between 0.5 and 2.5 s, $k$ shall be 2 or shall be determined by linear interpolation between 1 and 2

TK-550 Weight= 4.69 kip
Seismic Coefficient = $C_S$= 0.53
Base Shear V= **2.48 kip**
Centroid = .67H = 7.27 ft See Next Page from FEMA for Centroid Location
$M_{EQ}$= **18.06 ft-kip**

| | | | |
|---|---|---|---|
| client | Avantech | by SMV | sheet no. 17 |
| project | TSCR Process Enclosure | date 2/19 | |
| location | Hanford | checked | job no. |
| subject | FEMA - Vertical Distribution of Seismic Vessel Forces | date | 39001 |

Chapter 17: Nonbuilding Structure Design

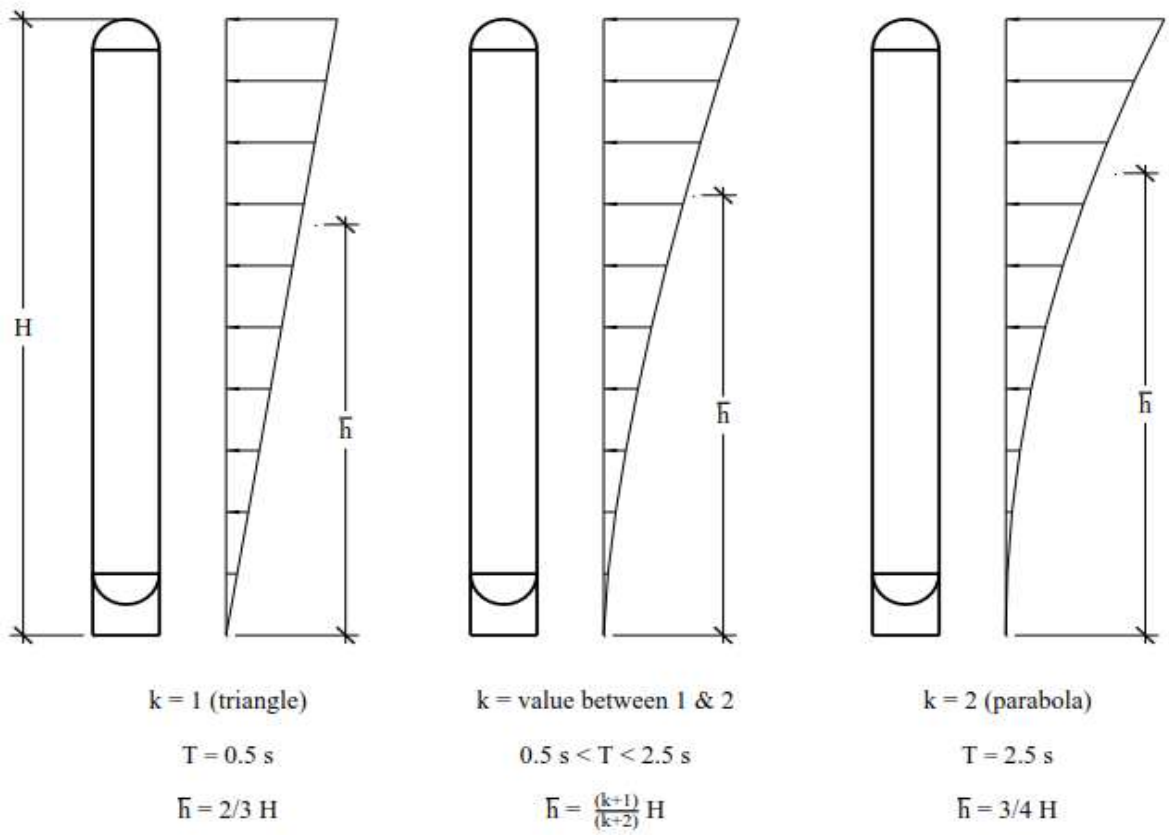


**Figure 17.7-2 Vertical distribution of seismic forces**

| | | |
|---|---|---|
| Base Frame Height= | 8.0 in | |
| Height to C.G.= | 65.3 in | |
| Height to Attachment Point= | 0.0 in | |
| Total Height from Base "0-0"= | 8.0 in | = 0.67 ft |

# TK-550 DELAY TANK

| | | | |
|---|---|---|---|
| client | Avantech | by SMV | sheet no. 18 |
| project | TSCR Process Enclosure | date 5/19 | |
| location | Hanford | checked | job no. |
| subject | TK-550 Shielding Weight | date | 39001 |

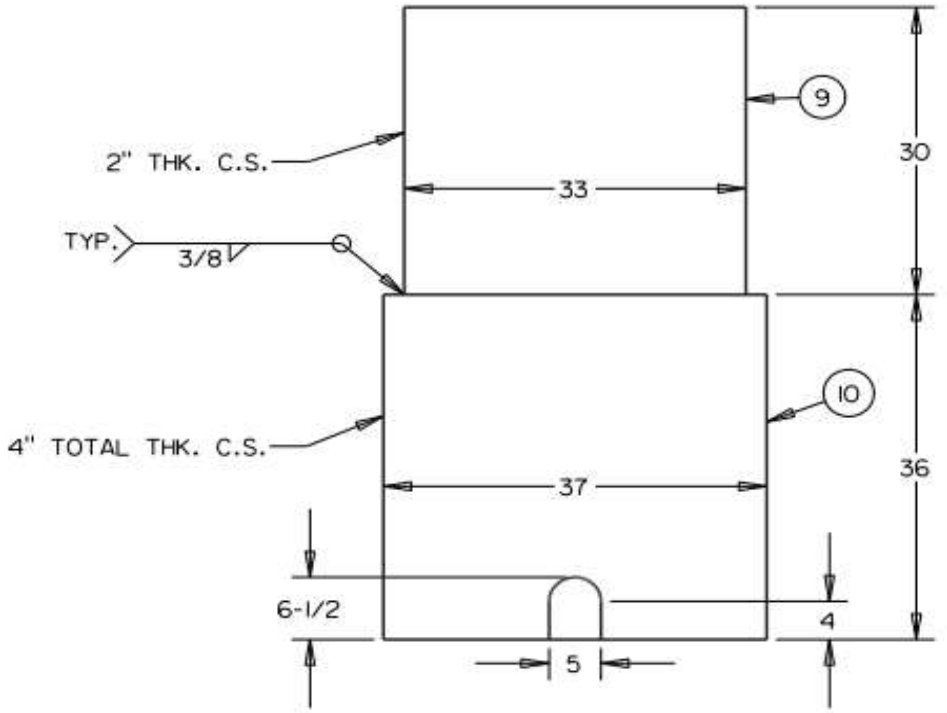


DELAY TANK SHIELDING DETAIL
FRONT VIEW

| | |
|---|---|
| Part 9 Outside Diameter= | 33.0 in |
| Part 9 Height= | 30.0 in |
| Part 9 Thickness= | 2.0 in |
| Part 9 Weight= | 2110 lbs |
| Part 9 C.G= | 51.0 in |
| Part 10 Outside Diameter= | 37.0 in |
| Part 10 Height= | 36.0 in |
| Part 10 Thickness= | 4.0 in |
| Part 10 Weight= | 4492 lbs |
| Part 10 C.G= | 18.0 in |
| Combined Weight= | 6602 lbs |
| Seismic Load Assumed at 2/3 Height= | 44.0 in |
| Seismic Coefficient= | 0.53 |
| Seismic Shear= | 3499 lbs |
| Risa Model # of Nodes= | 12 |
| Shear Load Per Node= | 292 lbs |
| Dead Load Per Node= | 550 lbs |

| | | | |
|---|---|---|---|
| client | Avantech | by SMV | sheet no. 19 |
| project | TSCR Process Enclosure | date 2/19 | |
| location | Hanford | checked | job no. |
| subject | Delay Tank TK-550 Seismic | date | 39001 |

**Seismic Force Calculation** (Per 2015 IBC & ASCE 7-10)

| | | | |
|---|---|---|---|
| Risk Category | IV | TFC-ENG-STD-06 Table 5, SDC-2, Limit State C | |
| Site Class | D | Per TFC-ENG-STD-06, Section 3.5.5.2 | |
| $S_S$ = | 0.7350 | For Site Location | |
| $S_1$ = | 0.1730 | For Site Location | for SDC see SDS & SD1 below |
| $F_a$ = | 1.212 | IBC Table 1613.3.3(1) | |
| $F_v$ = | 2.108 | IBC Table 1613.3.3(2) | |
| $S_{MS}=F_a*S_S=$ | 0.891 | | |
| $S_{M1}=F_v*S_1=$ | 0.365 | | |
| $S_{DS}=2/3*S_{MS}=$ | 0.594 | SDC D | TFC-ENG-STD-06 Section 3.5.5.2 |
| $S_{D1}=2/3*S_{M1}=$ | 0.243 | SDC D | TFC-ENG-STD-06 Section 3.5.5.2 |
| $I_e$= | 1.5 | ASCE 7-10 Table 1.5-2 | |
| R= | 2 | ASCE 7-10, Table 15.4-2 - Skirt Supported Vertical Vessel | |
| Limit State "C" Modifier= | 1.2 | TFC-ENG-STD-06 Table 5, SDC-2, Limit State C | |
| R= | 1.67 | ASCE 7-10, Table 15.4-2 - Skirt Supported Vertical Vessel | |
| $\Omega_o$= | 2 | ASCE 7-10, Table 15.4-2 - Skirt Supported Vertical Vessel | |
| **Type of Structure** | NonBuilding | **Type "NonBuilding" or "Building"** | |
| $V=C_S*W$ | | USE | [ASCE Eq 12.8-1] |
| $C_S=S_{DS}/(R/I)=$ | 0.53 | | [ASCE Eq 12.8-2] |

**Approx Fundamental Period Formulas 12.8.7,8,9,10 Do Not Apply per ASCE 7-10 15.4.4**

| | | | |
|---|---|---|---|
| $C_t$= | 0.028 | $h_n$= | 12.50 ft |
| x= | 0.8 | $T_L$= | 6.00 sec |
| $T=C_t*h_n^x=$ | 0.000 sec | $T_L$= | ASCE Fig 22-5 |

Check period using RISA structural model:

| | |
|---|---|
| RISA calculated period, T= | 0.220 sec |
| Use period, T= | 0.220 sec |

The value of Cs from Eq 12.8-2 need not exceed :

$C_S=S_{D1}/(T(R/I))$ ; for $T<T_L$ [ASCE Eq 12.8-3]

$C_S=(S_{D1}*T_L)/(T^2(R/I))$ ; for T>TL [ASCE Eq 12.8-4]

$C_S$= 0.99

The value of Cs shall not be less than : $0.044*S_{DS}*I_e$, or 0.03

$C_S$> 0.04 [ASCE Eq 15.4-1]

In addition, for structures located where $S_1$ is equal to or greater than 0.6g, $C_S$ shall not be less than:

$C_S=0.5*S_1/(R/I))=$ NA S1<.6 [ASCE Eq 12.8-6]

In addition, for rigid (T<.06) non-building structures:

$V=0.30*S_{DS}*I*W=$ NA T>.06 [ASCE Eq 15.4-5]

$V=C_S*W$ [ASCE Eq 12.8-1] $E=E_h+E_v$ [ASCE Eq 12.4-1]

$E_h=\rho Q_E$ [ASCE Eq 12.4-3] $E_v=0.2*S_{DS}*D$ [ASCE Eq 12.4-4]

$Q_E=V$ $\rho$= 1.00 [ASCE Sect 15.6]

**Seismic load combinations:**

Strength design per ASCE Sect 12.4.2.3

| | | | | |
|---|---|---|---|---|
| $(1.2+0.2S_{DS})D+\rho Q_E+1.0L$ | = 1.32*D | + 1.00*QE | + 1.00L | [ASCE Eq 2.3.2.5] |
| $(0.9-0.2S_{DS})D+\rho Q_E$ | = 0.78*D | + 1.00*QE | | [ASCE Eq 2.3.2.7] |

Allowable stress design per ASCE Sect 12.4.3.2

| | | | | |
|---|---|---|---|---|
| $(1.0+0.14S_{DS})D+0.7\rho Q_E$ | = 1.08*D | + 0.70*QE | | [ASCE Eq 2.4.1.5] |
| $(1.0+0.105S_{DS})D+0.525\rho Q_E+0.75L$ | = 1.06*D | + 0.53*QE | + 0.75L | [ASCE Eq 2.4.1.6b] |
| $(0.6-0.14S_{DS})D+0.7\rho Q_E$ | = 0.52*D | + 0.70*QE | | [ASCE Eq 2.4.1.8] |

Overstrength Combinations per ASCE Sect 12.4.3.2

| | | | | |
|---|---|---|---|---|
| $(1.2+0.2S_{DS})D+\Omega_o Q_E+1.0L$ | = 1.32*D | + 2.00*QE | + 1.00L | [ASCE Eq 2.3.2.5] |
| $(0.9-0.2S_{DS})D+\Omega_o Q_E$ | = 0.78*D | + 2.00*QE | | [ASCE Eq 2.3.2.7] |

| | | | |
|---|---|---|---|
| client | Avantech | by SMV | sheet no. 20 |
| project | TSCR Process Enclosure | date 2/19 | |
| location | Hanford | checked | job no. |
| subject | WP-FLT-325 A/B Filter Tanks | date | 39001 |

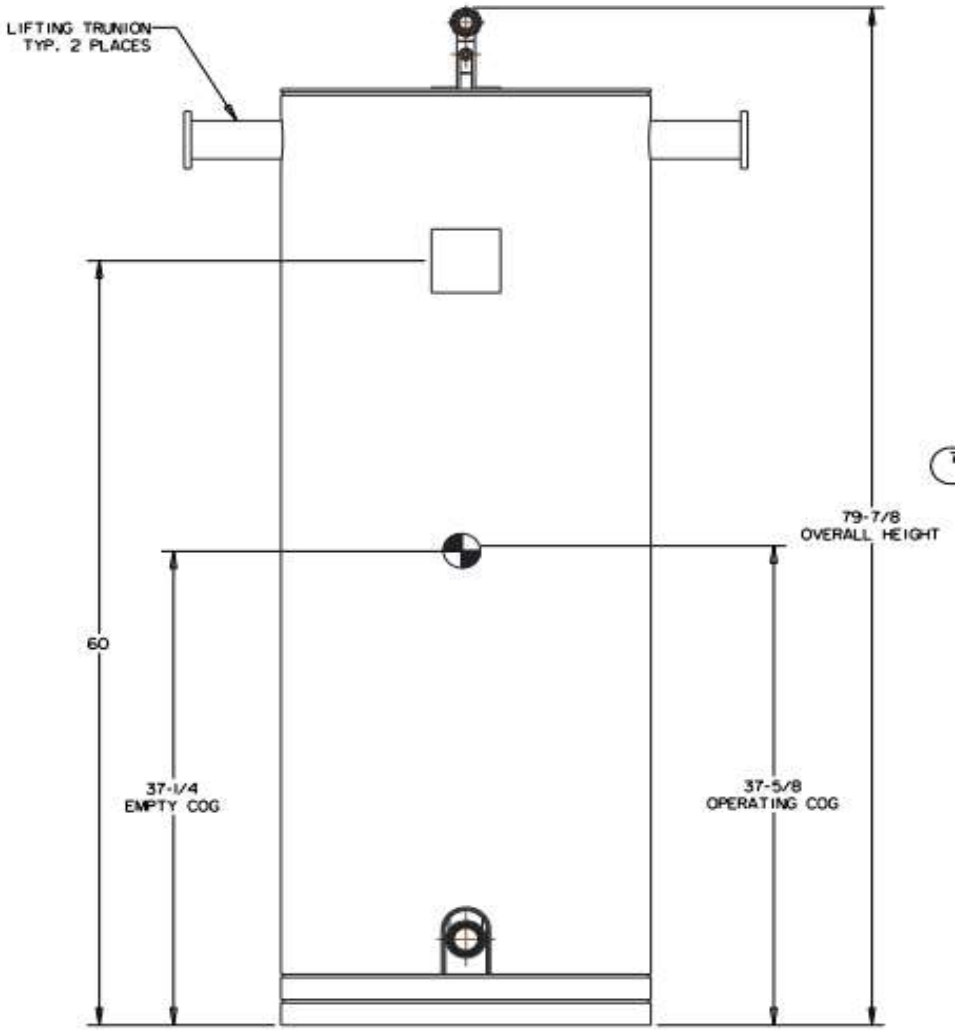


FRONT VIEW

NOTES:
1. EMPTY VESSEL WEIGHT (W/ SHIELDING): 7,832 LBS
2. OPERATING VESSEL WEIGHT (W/ SHIELDING): 8,388 LBS
3. ITEMS 2, 3, & 4 ARE FOR VESSEL REMOVAL

| | | |
|---|---|---|
| Base Frame Height = | 51.3 in | Top of Tube Stand to Base Elevation |
| Height to Trunnion Attachment Point = | 69.5 in | Bottom of Vessel to Trunnion |
| Height to C.G.= | 37.63 in | From Base of Vessel |
| Total Attachment Point Height from Base= | 120.8 in | = 10.06 ft |

**WP-FLT-325 A/B**

| client | Avantech | by SMV | sheet no. 21 |
|---|---|---|---|
| project | TSCR Process Enclosure | date 2/19 | |
| location | Hanford | checked | job no. |
| subject | WP-FLT-325 A/B Filter Tanks | date | 39001 |

**Seismic Force Calculation** (Per 2015 IBC & ASCE 7-10)

| | | | |
|---|---|---|---|
| Risk Category | IV | TFC-ENG-STD-06 Table 5, SDC-2, Limit State C | |
| Site Class | D | Per TFC-ENG-STD-06, Section 3.5.5.2 | |
| $S_S$ = | 0.7350 | For Site Location | |
| $S_1$ = | 0.1730 | For Site Location | for SDC see SDS & SD1 below |
| $F_a$ = | 1.212 | IBC Table 1613.3.3(1) | |
| $F_v$ = | 2.108 | IBC Table 1613.3.3(2) | |
| $S_{MS}=F_a*S_S$= | 0.891 | | |
| $S_{M1}=F_v*S_1$= | 0.365 | | |
| $S_{DS}$=2/3 *$S_{MS}$= | 0.594 | **SDC D** | TFC-ENG-STD-06 Section 3.5.5.2 |
| $S_{D1}$=2/3 *$S_{M1}$= | 0.243 | **SDC D** | TFC-ENG-STD-06 Section 3.5.5.2 |
| $I_e$= | 1.5 | ASCE 7-10 Table 1.5-2 | |
| R= | 2 | ASCE 7-10, Table 15.4-2 - Elevated Vertical Vessel - Unbraced Legs | |
| Limit State "C" Modifier= | 1.2 | TFC-ENG-STD-06 Table 5, SDC-2, Limit State C | |
| R= | 1.67 | | |
| $\Omega_o$= | 2 | ASCE 7-10, Table 15.4-2 - Elevated Vertical Vessel - Unbraced Legs | |
| **Type of Structure** | **NonBuilding** | **Type "NonBuilding" or "Building"** | |
| $V=C_S*W$ | | USE | [ASCE Eq 12.8-1] |
| $C_S=S_{DS}/(R/I)$= | **0.53** | ← | [ASCE Eq 12.8-2] |

**Approx Fundamental Period Formulas 12.8.7,8,9,10 Do Not Apply per ASCE 7-10 15.4.4**

| | | | |
|---|---|---|---|
| $C_t$= | n/a | $h_n$= | n/a |
| x= | n/a | $T_L$= | n/a |
| $T=C_t*h_n^x$= | 0.000 sec | $T_L$= ASCE Fig 22-5 | |

Check period using RISA structural model:

| | |
|---|---|
| RISA calculated period, T= | 0.370 sec |
| Use period, T= | 0.370 sec |

The value of Cs from Eq 12.8-2 need not exceed :

$C_S=S_{D1}/(T(R/I))$ ; for $T<T_L$ [ASCE Eq 12.8-3]

$C_S=(S_{D1}*T_L/(T^2(R/I))$ ; for T>TL [ASCE Eq 12.8-4]

$C_S$= **0.59**

The value of Cs shall not be less than : $0.044*S_{DS}*I_e$, or 0.03

$C_S$> **0.04** [ASCE Eq 15.4-1]

In addition, for structures located where $S_1$ is equal to or greater than 0.6g, $C_S$ shall not be less than:

$C_S=0.5*S_1/(R/I))$= **NA S1<.6** [ASCE Eq 12.8-6]

In addition, for rigid (T<.06) non-building structures:

$V=0.30*S_{DS}*I*W$= **NA T>.06** [ASCE Eq 15.4-5]

$V=C_S*W$ [ASCE Eq 12.8-1] $E=E_h+E_v$ [ASCE Eq 12.4-1]

$E_h=\rho Q_E$ [ASCE Eq 12.4-3] $E_v=0.2*S_{DS}*D$ [ASCE Eq 12.4-4]

$Q_E=V$ $\rho$= 1.00 [ASCE Sect 15.6]

**Seismic load combinations:**

Strength design per ASCE Sect 12.4.2.3

| | | | | |
|---|---|---|---|---|
| $(1.2+0.2S_{DS})D+\rho Q_E+1.0L$ | = 1.32*D | + 1.00*QE | + 1.00L | [ASCE Eq 2.3.2.5] |
| $(0.9-0.2S_{DS})D+\rho Q_E$ | = 0.78*D | + 1.00*QE | | [ASCE Eq 2.3.2.7] |

Allowable stress design per ASCE Sect 12.4.3.2

| | | | | |
|---|---|---|---|---|
| $(1.0+0.14S_{DS})D+0.7\rho Q_E$ | = 1.08*D | + 0.70*QE | | [ASCE Eq 2.4.1.5] |
| $(1.0+0.105S_{DS})D+0.525\rho Q_E+0.75L$ | = 1.06*D | + 0.53*QE | + 0.75L | [ASCE Eq 2.4.1.6b] |
| $(0.6-0.14S_{DS})D+0.7\rho Q_E$ | = 0.52*D | + 0.70*QE | | [ASCE Eq 2.4.1.8] |

Overstrength Combinations per ASCE Sect 12.4.3.2

| | | | | |
|---|---|---|---|---|
| $(1.2+0.2S_{DS})D+\Omega_o Q_E+1.0L$ | = 1.32*D | + 2.00*QE | + 1.00L | [ASCE Eq 2.3.2.5] |
| $(0.9-0.2S_{DS})D+\Omega_o Q_E$ | = 0.78*D | + 2.00*QE | | [ASCE Eq 2.3.2.7] |

| | | | |
|---|---|---|---|
| client | Avantech | by SMV | sheet no. 22 |
| project | TSCR Process Enclosure | date 2/19 | |
| location | Hanford | checked | job no. |
| subject | Process Enclosure Skid - Additional Nonbuilding Components | date | 39001 |

Additional Process Enclosure Skid Component Weights, received from Connor Shull, Avantech, by email on 2/1/19.

| Component | Weight (lbs) | X (North/South) [in] | Y (Vertical Height) [in] | Z (East/West) [in] |
|---|---|---|---|---|
| Piping | 9600 | 157.71 | 70.73 | 62.35 |
| Electrical Conduit | 910 | 265.56 | 138 | 62 |
| WP-ENCL-002 | 750 | 397.47 | 85 | 54.22 |
| WP-ENCL-004 | 300 | 360 | 100 | 12 |
| HVAC Intake Train | 410 | 386.25 | 26.25 | 52 |
| HVAC Exhaust Train | 410 | 263.5 | 36.5 | 119.95 |
| Top Gamma Monitor (Radiation Monitor) | 463 | 321.93 | 88 | 32.5 |
| Bottom Gamma Monitor (Radiation Monitor) | 463 | 321.93 | 70 | 32.5 |
| Air Receiver Tank | 205 | 14.75 | 114.04 | 86.25 |
| Wall mounted HVAC Unit Airlock | 21 | 398.26 | 136.1 | 28.44 |
| Wall mounted HVAC Unit Process Area | 27 | 11 | 135.07 | 94.25 |
| HVAC Ductwork | 480 | 256.65 | 34.54 | 94.96 |
| HVAC Condenser | 151 | 8.83 | 39.86 | 29.32 |

| Wall | Weight (lbs) |
|---|---|
| East Side Wall | 9700 |
| West Side Wall | 9000 |
| North Side Wall | 3000 |
| South Side Wall | 2800 |
| Bottom Wall | 10500 |
| Ceiling Wall | 7600 |

| | | | |
|---|---|---|---|
| client | Avantech | by SMV | sheet no. 23 |
| project | TSCR Process Enclosure | date 2/19 | |
| location | Hanford | checked | job no. |
| subject | TSCR Process Skid Piping Seismic Force | date | 39001 |

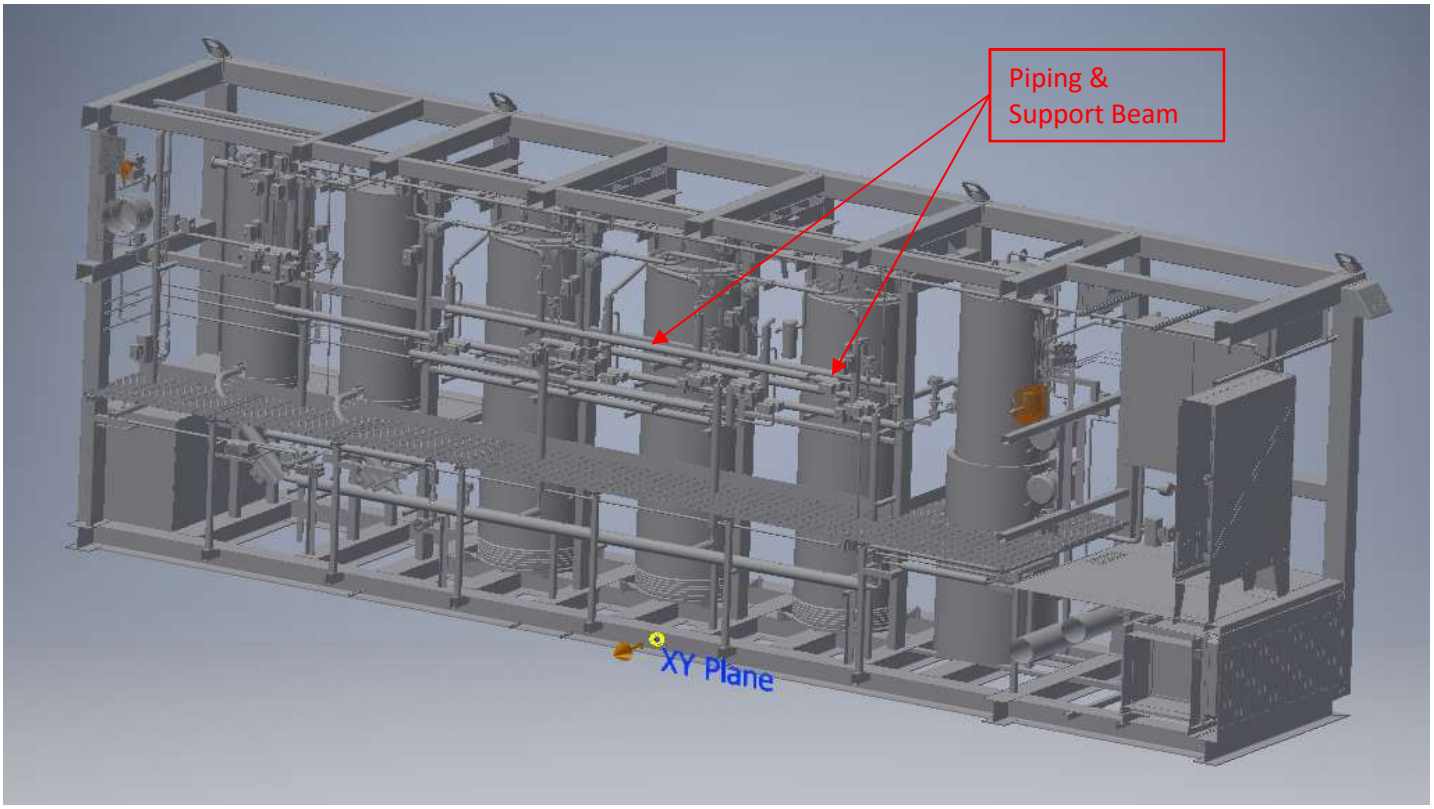


**DISTRIBUTION SYSTEMS**

| | | | |
|---|---|---|---|
| Piping in accordance with ASME B31, including in-line components with joints made by welding or brazing. | 2½ | 12 | 2½ |
| Piping in accordance with ASME B31, including in-line components, constructed of high- or limited-deformability materials, with joints made by threading, bonding, compression couplings, or grooved couplings. | 2½ | 6 | 2½ |
| Piping and tubing not in accordance with ASME B31, including in-line components, constructed of high-deformability materials, with joints made by welding or brazing. | 2½ | 9 | 2½ |
| Piping and tubing not in accordance with ASME B31, including in-line components, constructed of high- or limited-deformability materials, with joints made by threading, bonding, compression couplings, or grooved couplings. | 2½ | 4½ | 2½ |
| Piping and tubing constructed of low-deformability materials, such as cast iron, glass, and nonductile plastics. | 2½ | 3 | 2½ |

Note: Most of the piping is supported off of a HSS 4x2x1/4 beam that spans between center HSS6x3x1/4 Columns. Conservatively, apply piping seismic component load at these columns at the height of the this beam.

| | | | |
|---|---|---|---|
| client | Avantech | by SMV | sheet no. 24 |
| project | TSCR Process Enclosure | date 2/19 | |
| location | Hanford | checked | job no. |
| subject | TSCR Process Skid Piping Seismic Force | date | 39001 |

**Mechanical Piping - Non-Building Component, See ASCE 7-10 Table 13.6-1**

**Seismic Force Calculation** (Per ASCE 7-010)

| | | |
|---|---|---|
| Occupancy Category | IV | Per Table 5, TFC-ENG-STD-06 |
| Site Class | D | Per Site Criteria |
| $\rho$= | 1 | ASCE 7-10 Section 13.3.1 |
| $S_{DS}$= | 0.5940 | Per TFC-ENG-STD-06, For Site Class D |
| $I_p$= | 1.5 | ASCE 7-10 Sect 13.1.3 |
| $R_p$= | 6 | ASCE 7-10 Table 13.6-1-Piping Per ASME B31 |
| Limit State "C" Modifier= | 1.2 | TFC-ENG-STD-06 Table 5, SDC-2, Limit State C |
| $R_{pa}$= | 5.00 | ASCE 7-10 Table 13.6-1, Mod. by SDC-2, Limit State C |
| $a_p$= | 2.50 | ASCE 7-10 Table 13.6-1-Piping Per ASME B31 |
| z= | 5.89 ft | Height in structure of Component Attachment |
| h= | 12.50 ft | Average roof height of structure |
| $\Omega_O$= | 2.5 | Will apply for Concrete Anchorage |

**For Nonstructural Components:**

| | | |
|---|---|---|
| $F_p=0.4a_pS_{DS}W_p/(R_p/I_p)*(1+2z/h)$= | **0.346 Wp** | $F_p$=ASCE 7-10 Eq 13.3-1] USE |

Fp is not required to be taken as greater than

| | | |
|---|---|---|
| $F_p=1.6S_{DS}I_pW_p$= | 1.426 Wp | [ASCE 7-10 Eq 13.3-2] |

and shall not be taken less than

| | | |
|---|---|---|
| $F_p=0.3S_{DS}I_pW_p$= | 0.267 Wp | [ASCE7-10 Eq 13.3-3] |
| Wp= | 9600 lbs | |
| $F_p$= | **3323 lbs** | Apply at C.G. Piping System |

**Seismic Load Effect:**

$E=E_h+E_v$ [ASCE Eq 12.4-1] $E_h=\rho Q_E$ [ASCE Eq 12.4-3]

$Q_E=F_p$ [ASCE Eq 12.4-3] $E_v=0.2*S_{DS}*D$ [ASCE Eq 13.3]

$\rho$= 1.00 [ASCE Sect 13.3]

**Seismic load combinations:**

Allowable stress design per ASCE Sect 12.4.3.2

| | | | | |
|---|---|---|---|---|
| $(1.0+0.14S_{DS})D+0.7\rho Q_E$ | = 1.08*D | + 0.70*QE | | [ASCE Eq 2.4.1.5] |
| $(1.0+0.10S_{DS})D+0.525\rho Q_E+0.75L$ | = 1.06*D | + 0.53*QE | + 0.75L | [ASCE Eq 2.4.1.6] |
| $(0.6-0.14S_{DS})D+0.7\rho Q_E$ | = 0.52*D | + 0.70*QE | | [ASCE Eq 2.4.1.8] |

Strength design per ASCE Sect 12.4.2.3

| | | | | |
|---|---|---|---|---|
| $(1.2+0.2S_{DS})D+\rho Q_E+1.0L$ | = 1.32*D | + 1.00*QE | + 1.00L | [ASCE Eq 2.3.2.5] |
| $(0.9-0.2S_{DS})D+\rho Q_E$ | = 0.78*D | + 1.00*QE | | [ASCE Eq 2.3.2.7] |

Strength Design with Overstrength Factor Per ASCE Sect 12.4.3.2

| | | | | |
|---|---|---|---|---|
| $(1.2+0.2S_{DS})D+\Omega_O Q_E+1.0L+0.2S$ | = 1.32*D | + 2.50*QE | + 1.00L | + 0.20S |
| $(0.9-0.2S_{DS})D+\Omega_O Q_E$ | = 0.90*D | + 2.50*QE | | |

| | | | |
|---|---|---|---|
| client | Avantech | by SMV | sheet no. 25 |
| project | TSCR Process Enclosure | date 2/19 | |
| location | Hanford | checked | job no. |
| subject | Gamma Monitor Seismic Design Force | date | 39001 |

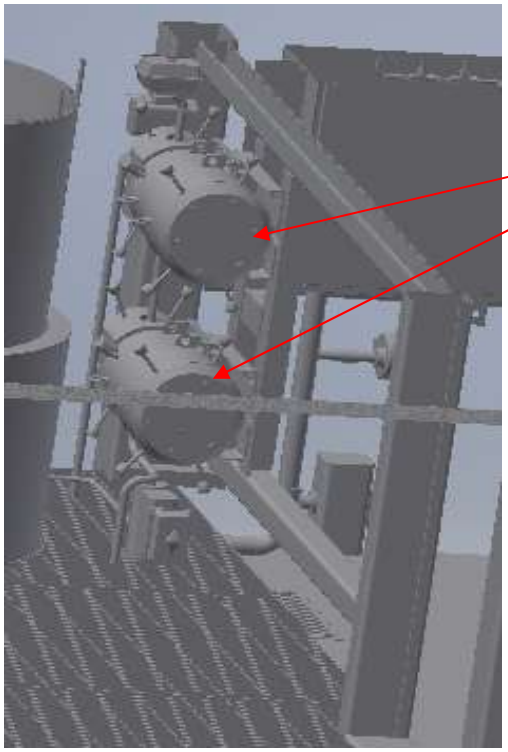


**Table 13.6-1 Seismic Coefficients for Mechanical and Electrical Components**

| MECHANICAL AND ELECTRICAL COMPONENTS | $a_p$[a] | $R_p$[b] | $\Omega_0$[c] |
|---|---|---|---|
| Air-side HVAC, fans, air handlers, air conditioning units, cabinet heaters, air distribution boxes, and other mechanical components constructed of sheet metal framing. | 2½ | 6 | 2½ |
| Wet-side HVAC, boilers, furnaces, atmospheric tanks and bins, chillers, water heaters, heat exchangers, evaporators, air separators, manufacturing or process equipment, and other mechanical components constructed of high-deformability materials. | 1 | 2½ | 2½ |
| Engines, turbines, pumps, compressors, and pressure vessels not supported on skirts and not within the scope of Chapter 15. | 1 | 2½ | 2½ |
| Skirt-supported pressure vessels not within the scope of Chapter 15. | 2½ | 2½ | 2½ |
| Elevator and escalator components. | 1 | 2½ | 2½ |
| Generators, batteries, inverters, motors, transformers, and other electrical components constructed of high-deformability materials. | 1 | 2½ | 2½ |
| Motor control centers, panel boards, switch gear, instrumentation cabinets, and other components constructed of sheet metal framing. | 2½ | 6 | 2½ |
| Communication equipment, computers, instrumentation, and controls. | 1 | 2½ | 2½ |
| Roof-mounted stacks, cooling and electrical towers laterally braced below their center of mass. | 2½ | 3 | 2½ |
| Roof-mounted stacks, cooling and electrical towers laterally braced above their center of mass. | 1 | 2½ | 2½ |
| Lighting fixtures. | 1 | 1½ | 1½ |
| Other mechanical or electrical components. | 1 | 1½ | 1½ |

| | | |
|---|---|---|
| Height to C.G.= | 88.00 in | Top Gamma Monitor |
| Height to Attachment Point= | 88.0 in | Mounted on Tube Framing |
| Total Height from Base "0-0"= | 88.0 in | = 7.33 ft |

# Gamma Monitors

| | | | |
|---|---|---|---|
| client | Avantech | by SMV | sheet no. 26 |
| project | TSCR Process Enclosure | date 2/19 | |
| location | Hanford | checked | job no. |
| subject | Gamma Monitor Seismic Design Force | date | 39001 |

**Gamma Monitor - Non-Building Component, See ASCE 7-10 Table 13.6-1**

**Seismic Force Calculation** (Per ASCE 7-010)

| | | |
|---|---|---|
| Occupancy Category | IV | Per Table 5, TFC-ENG-STD-06 |
| Site Class | D | Per Site Criteria |
| $\rho$= | 1 | ASCE 7-10 Section 13.3.1 |
| $S_{DS}$= | 0.5940 | Per TFC-ENG-STD-06, For Site Class D |
| $I_p$= | 1.5 | ASCE 7-10 Sect 13.1.3 |
| $R_p$= | 1.5 | ASCE 7-10 Table 13.6-1-Other Electrical Components |
| Limit State "C" Modifier= | 1.2 | TFC-ENG-STD-06 Table 5, SDC-2, Limit State C |
| $R_{pa}$= | 1.25 | ASCE 7-10 Table 13.6-1, Mod. by SDC-2, Limit State C |
| $a_p$= | 1.00 | ASCE 7-10 Table 13.6-1-Other Electrical Components |
| z= | 7.33 ft | Height in structure of Component Attachment |
| h= | 12.50 ft | Average roof height of structure |
| $\Omega_O$= | 1.5 | Will apply for Concrete Anchorage |

**For Nonstructural Components:**

$F_p=0.4a_pS_{DS}W_p/(R_p/I_p)*(1+2z/h)$= **0.620 Wp** $F_p$=ASCE 7-10 Eq 13.3-1] USE

Fp is not required to be taken as greater than

$F_p=1.6S_{DS}I_pW_p$= 1.426 Wp [ASCE 7-10 Eq 13.3-2]

and shall not be taken less than

$F_p=0.3S_{DS}I_pW_p$= 0.267 Wp [ASCE7-10 Eq 13.3-3]

Wp= 463 lbs

$F_p$= **287 lbs** Apply at C.G. Piping System

**Seismic Load Effect:**

$E=E_h+E_v$ [ASCE Eq 12.4-1] $E_h=\rho Q_E$ [ASCE Eq 12.4-3]

$Q_E=F_p$ [ASCE Eq 12.4-3] $E_v=0.2*S_{DS}*D$ [ASCE Eq 13.3]

$\rho$= 1.00 [ASCE Sect 13.3]

**Seismic load combinations:**

Allowable stress design per ASCE Sect 12.4.3.2

| | | | | |
|---|---|---|---|---|
| $(1.0+0.14S_{DS})D+0.7\rho Q_E$ | = 1.08*D | + 0.70*QE | | [ASCE Eq 2.4.1.5] |
| $(1.0+0.10S_{DS})D+0.525\rho Q_E+0.75L$ | = 1.06*D | + 0.53*QE | + 0.75L | [ASCE Eq 2.4.1.6] |
| $(0.6-0.14S_{DS})D+0.7\rho Q_E$ | = 0.52*D | + 0.70*QE | | [ASCE Eq 2.4.1.8] |

Strength design per ASCE Sect 12.4.2.3

| | | | | |
|---|---|---|---|---|
| $(1.2+0.2S_{DS})D+\rho Q_E+1.0L$ | = 1.32*D | + 1.00*QE | + 1.00L | [ASCE Eq 2.3.2.5] |
| $(0.9-0.2S_{DS})D+\rho Q_E$ | = 0.78*D | + 1.00*QE | | [ASCE Eq 2.3.2.7] |

Strength Design with Overstrength Factor Per ASCE Sect 12.4.3.2

| | | | | |
|---|---|---|---|---|
| $(1.2+0.2S_{DS})D+\Omega_O Q_E+1.0L+0.2S$ | = 1.32*D | + 1.50*QE | + 1.00L | + 0.20S |
| $(0.9-0.2S_{DS})D+\Omega_O Q_E$ | = 0.90*D | + 1.50*QE | | |

| | | | |
|---|---|---|---|
| client | Avantech | by SMV | sheet no. 27 |
| project | TSCR Process Enclosure | date 2/19 | |
| location | Hanford | checked | job no. |
| subject | Electrical Cabinets | date | 39001 |

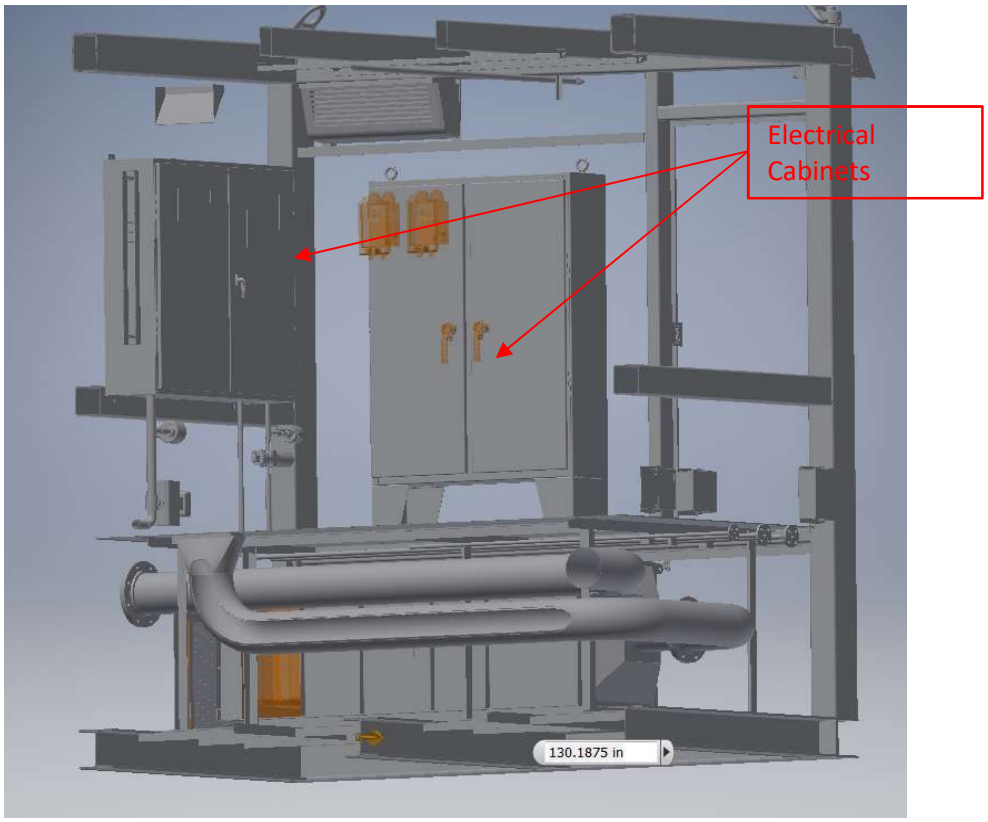


**Table 13.6-1 Seismic Coefficients for Mechanical and Electrical Components**

| MECHANICAL AND ELECTRICAL COMPONENTS | $a_p$[a] | $R_p$[b] | $\Omega_0$[c] |
|---|---|---|---|
| Air-side HVAC, fans, air handlers, air conditioning units, cabinet heaters, air distribution boxes, and other mechanical components constructed of sheet metal framing. | 2½ | 6 | 2½ |
| Wet-side HVAC, boilers, furnaces, atmospheric tanks and bins, chillers, water heaters, heat exchangers, evaporators, air separators, manufacturing or process equipment, and other mechanical components constructed of high-deformability materials. | 1 | 2½ | 2½ |
| Engines, turbines, pumps, compressors, and pressure vessels not supported on skirts and not within the scope of Chapter 15. | 1 | 2½ | 2½ |
| Skirt-supported pressure vessels not within the scope of Chapter 15. | 2½ | 2½ | 2½ |
| Elevator and escalator components. | 1 | 2½ | 2½ |
| Generators, batteries, inverters, motors, transformers, and other electrical components constructed of high-deformability materials. | 1 | 2½ | 2½ |
| Motor control centers, panel boards, switch gear, instrumentation cabinets, and other components constructed of sheet metal framing. | 2½ | 6 | 2½ |

Height to C.G.= 100.00 in

Height to Attachment Point= 100.0 in Mounted on Angle Framing

Total Height from Base "0-0"= 100.0 in = 8.33 ft

# Electrical Cabinets

| | | | |
|---|---|---|---|
| client | Avantech | by SMV | sheet no. 28 |
| project | TSCR Process Enclosure | date 2/19 | |
| location | Hanford | checked | job no. |
| subject | Electrical Cabinet Seismic Force | date | 39001 |

**Electrical Cabinets - Non-Building Component, See ASCE 7-10 Table 13.6-1**

**Seismic Force Calculation** (Per ASCE 7-010)

| | | |
|---|---|---|
| Occupancy Category | IV | Per Table 5, TFC-ENG-STD-06 |
| Site Class | D | Per Site Criteria |
| $\rho$= | 1 | ASCE 7-10 Section 13.3.1 |
| $S_{DS}$= | 0.5940 | Per TFC-ENG-STD-06, For Site Class D |
| $I_p$= | 1.5 | ASCE 7-10 Sect 13.1.3 |
| $R_p$= | 6 | ASCE 7-10 Table 13.6-1-Motor Control Centers |
| Limit State "C" Modifier= | 1.2 | TFC-ENG-STD-06 Table 5, SDC-2, Limit State C |
| $R_{pa}$= | 5.00 | ASCE 7-10 Table 13.6-1, Mod. by SDC-2, Limit State C |
| $a_p$= | 2.50 | ASCE 7-10 Table 13.6-1-Motor Control Centers |
| z= | 8.33 ft | Height in structure of Component Attachment |
| h= | 12.50 ft | Average roof height of structure |
| $\Omega_O$= | 1.5 | Will apply for Concrete Anchorage |

**For Nonstructural Components:**

$F_p=0.4a_pS_{DS}W_p/(R_p/I_p)*(1+2z/h)$= **0.416 Wp** $F_p$=ASCE 7-10 Eq 13.3-1] USE

Fp is not required to be taken as greater than

$F_p=1.6S_{DS}I_pW_p$= 1.426 Wp [ASCE 7-10 Eq 13.3-2]

and shall not be taken less than

$F_p=0.3S_{DS}I_pW_p$= 0.267 Wp [ASCE7-10 Eq 13.3-3]

| | | |
|---|---|---|
| Wp= | 750 lbs | For WP-ENCL-002 |
| $F_p$= | **312 lbs** | Apply at C.G. Cabinet |
| Wp= | 300 lbs | For WP-ENCL-004 |
| $F_p$= | **125 lbs** | |

**Seismic Load Effect:**

$E=E_h+E_v$ [ASCE Eq 12.4-1] $E_h=\rho Q_E$ [ASCE Eq 12.4-3]

$Q_E=F_p$ [ASCE Eq 12.4-3] $E_v=0.2*S_{DS}*D$ [ASCE Eq 13.3]

$\rho$= 1.00 [ASCE Sect 13.3]

**Seismic load combinations:**

Allowable stress design per ASCE Sect 12.4.3.2

| | | | | |
|---|---|---|---|---|
| $(1.0+0.14S_{DS})D+0.7\rho Q_E$ | = 1.08*D | + 0.70*QE | | [ASCE Eq 2.4.1.5] |
| $(1.0+0.10S_{DS})D+0.525\rho Q_E+0.75L$ | = 1.06*D | + 0.53*QE | + 0.75L | [ASCE Eq 2.4.1.6] |
| $(0.6-0.14S_{DS})D+0.7\rho Q_E$ | = 0.52*D | + 0.70*QE | | [ASCE Eq 2.4.1.8] |

Strength design per ASCE Sect 12.4.2.3

| | | | | |
|---|---|---|---|---|
| $(1.2+0.2S_{DS})D+\rho Q_E+1.0L$ | = 1.32*D | + 1.00*QE | + 1.00L | [ASCE Eq 2.3.2.5] |
| $(0.9-0.2S_{DS})D+\rho Q_E$ | = 0.78*D | + 1.00*QE | | [ASCE Eq 2.3.2.7] |

Strength Design with Overstrength Factor Per ASCE Sect 12.4.3.2

| | | | | |
|---|---|---|---|---|
| $(1.2+0.2S_{DS})D+\Omega_O Q_E+1.0L+0.2S$ | = 1.32*D | + 1.50*QE | + 1.00L | + 0.20S |
| $(0.9-0.2S_{DS})D+\Omega_O Q_E$ | = 0.90*D | + 1.50*QE | | |

| | | | |
|---|---|---|---|
| client | Avantech | by SMV | sheet no. 29 |
| project | TSCR Process Enclosure | date 5/19 | |
| location | Hanford | checked | job no. |
| subject | Air Reciever Tank Seismic Design Force | date | 39001 |

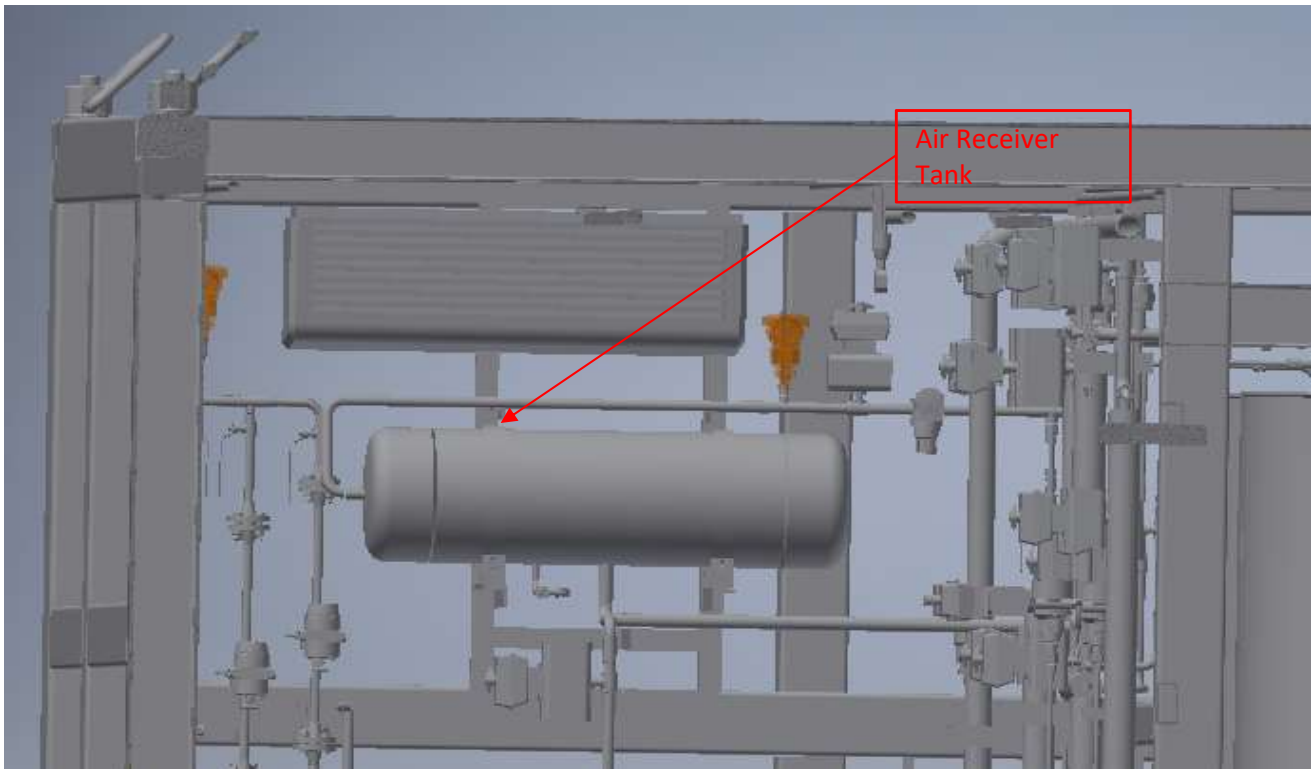


**Table 13.6-1 Seismic Coefficients for Mechanical and Electrical Components**

| MECHANICAL AND ELECTRICAL COMPONENTS | $a_p$[a] | $R_p$[b] | $\Omega_0$[c] |
|---|---|---|---|
| Air-side HVAC, fans, air handlers, air conditioning units, cabinet heaters, air distribution boxes, and other mechanical components constructed of sheet metal framing. | 2½ | 6 | 2½ |
| Wet-side HVAC, boilers, furnaces, atmospheric tanks and bins, chillers, water heaters, heat exchangers, evaporators, air separators, manufacturing or process equipment, and other mechanical components constructed of high-deformability materials. | 1 | 2½ | 2½ |
| Engines, turbines, pumps, compressors, and pressure vessels not supported on skirts and not within the scope of Chapter 15. | 1 | 2½ | 2½ |
| Skirt-supported pressure vessels not within the scope of Chapter 15. | 2½ | 2½ | 2½ |
| Elevator and escalator components. | 1 | 2½ | 2½ |
| Generators, batteries, inverters, motors, transformers, and other electrical components constructed of high-deformability materials. | 1 | 2½ | 2½ |
| Motor control centers, panel boards, switch gear, instrumentation cabinets, and other components constructed of sheet metal framing. | 2½ | 6 | 2½ |
| Communication equipment, computers, instrumentation, and controls. | 1 | 2½ | 2½ |
| Roof-mounted stacks, cooling and electrical towers laterally braced below their center of mass. | 2½ | 3 | 2½ |
| Roof-mounted stacks, cooling and electrical towers laterally braced above their center of mass. | 1 | 2½ | 2½ |
| Lighting fixtures. | 1 | 1½ | 1½ |
| Other mechanical or electrical components. | 1 | 1½ | 1½ |

Height to C.G.= 114.00 in

Height to Attachment Point= 114.0 in Mounted on Angle Framing

Total Height from Base "0-0"= 114.0 in = 9.50 ft

# Air Receiver Tank

| | | | |
|---|---|---|---|
| client | Avantech | by SMV | sheet no. 30 |
| project | TSCR Process Enclosure | date 2/19 | |
| location | Hanford | checked | job no. |
| subject | Air Receiver Tank Seismic Force | date | 39001 |

**Air Receiver - Non-Building Component, See ASCE 7-10 Table 13.6-1**

**Seismic Force Calculation** (Per ASCE 7-010)

| | | |
|---|---|---|
| Occupancy Category | IV | Per Table 5, TFC-ENG-STD-06 |
| Site Class | D | Per Site Criteria |
| $\rho$= | 1 | ASCE 7-10 Section 13.3.1 |
| $S_{DS}$= | 0.5940 | Per TFC-ENG-STD-06, For Site Class D |
| $I_p$= | 1.5 | ASCE 7-10 Sect 13.1.3 |
| $R_p$= | 2.5 | ASCE 7-10 Table 13.6-1-Motor Control Centers |
| Limit State "C" Modifier= | 1.2 | TFC-ENG-STD-06 Table 5, SDC-2, Limit State C |
| $R_{pa}$= | 2.08 | ASCE 7-10 Table 13.6-1, Mod. by SDC-2, Limit State C |
| $a_p$= | 1.00 | ASCE 7-10 Table 13.6-1-Motor Control Centers |
| z= | 9.50 ft | Height in structure of Component Attachment |
| h= | 12.50 ft | Average roof height of structure |
| $\Omega_O$= | 1.5 | Will apply for Concrete Anchorage |

**For Nonstructural Components:**

| | | |
|---|---|---|
| $F_p$=0.4$a_p S_{DS} W_p/(R_p/I_p)$*(1+2z/h)= | **0.431 Wp** | $F_p$=ASCE 7-10 Eq 13.3-1] USE |

Fp is not required to be taken as greater than

| | | |
|---|---|---|
| $F_p$=1.6$S_{DS} I_p W_p$= | 1.426 Wp | [ASCE 7-10 Eq 13.3-2] |

and shall not be taken less than

| | | |
|---|---|---|
| $F_p$=0.3$S_{DS} I_p W_p$= | 0.267 Wp | [ASCE7-10 Eq 13.3-3] |
| Wp= | 205 lbs | For WP-ENCL-002 |
| $F_p$= | **88 lbs** | Apply at C.G. Cabinet |

**Seismic Load Effect:**

$E=E_h+E_v$ [ASCE Eq 12.4-1] $E_h=\rho Q_E$ [ASCE Eq 12.4-3]

$Q_E=F_p$ [ASCE Eq 12.4-3] $E_v=0.2*S_{DS}*D$ [ASCE Eq 13.3]

$\rho$= 1.00 [ASCE Sect 13.3]

**Seismic load combinations:**

Allowable stress design per ASCE Sect 12.4.3.2

| | | | | |
|---|---|---|---|---|
| $(1.0+0.14S_{DS})D+0.7\rho Q_E$ | = 1.08*D | + 0.70*QE | | [ASCE Eq 2.4.1.5] |
| $(1.0+0.10S_{DS})D+0.525\rho Q_E+0.75L$ | = 1.06*D | + 0.53*QE | + 0.75L | [ASCE Eq 2.4.1.6] |
| $(0.6-0.14S_{DS})D+0.7\rho Q_E$ | = 0.52*D | + 0.70*QE | | [ASCE Eq 2.4.1.8] |

Strength design per ASCE Sect 12.4.2.3

| | | | | |
|---|---|---|---|---|
| $(1.2+0.2S_{DS})D+\rho Q_E+1.0L$ | = 1.32*D | + 1.00*QE | + 1.00L | [ASCE Eq 2.3.2.5] |
| $(0.9-0.2S_{DS})D+\rho Q_E$ | = 0.78*D | + 1.00*QE | | [ASCE Eq 2.3.2.7] |

Strength Design with Overstrength Factor Per ASCE Sect 12.4.3.2

| | | | | |
|---|---|---|---|---|
| $(1.2+0.2S_{DS})D+\Omega_O Q_E+1.0L+0.2S$ | = 1.32*D | + 1.50*QE | + 1.00L | + 0.20S |
| $(0.9-0.2S_{DS})D+\Omega_O Q_E$ | = 0.90*D | + 1.50*QE | | |

| | | | |
|---|---|---|---|
| client | Avantech | by SMV | sheet no. 31 |
| project | TSCR Process Enclosure | date 4/19 | |
| location | Hanford | checked | job no. |
| subject | Hose Shielding Components - Weights and Locations | date | 39001 |

Per AVANTech Email 4/25/19, The following are shielding compontents

| PART DESCRIPTION | WEIGHT (LBS) | X - COG (EAST/WEST) | Y - COG (VERTICAL) | Z - COG (NORHT/SOUTH) |
|---|---|---|---|---|
| IXC-400A HOSE SHIELDING BOX | 1200 | 46.5 | 122 | 133 |
| IXC-400B HOSE SHIELDING BOX | 1200 | 46.5 | 122 | 188.92 |
| IXC-400C HOSE SHIELDING BOX | 1200 | 46.5 | 122 | 244.84 |
| WP-FLT-325A BOTTOM HOSE SHIELDING BOX | 270 | 49.5 | 51.25 | 35 |
| WP-FLT-325A TOP HOSE SHIELDING BOX | 140 | 32.88 | 129.5 | 39.75 |
| WP-FLT-325B BOTTOM HOSE SHIELDING BOX | 270 | 49.5 | 51.25 | 79 |
| WP-FLT-325B TOP HOSE SHIELDING BOX | 140 | 77.13 | 129.5 | 39.75 |

| | | | |
|---|---|---|---|
| client | Avantech | by SMV | sheet no. 32 |
| project | TSCR Process Enclosure | date 4/19 | |
| location | Hanford | checked | job no. |
| subject | IXC 400 A/B/C Hose Shielding - Seismic Force | date | 39001 |

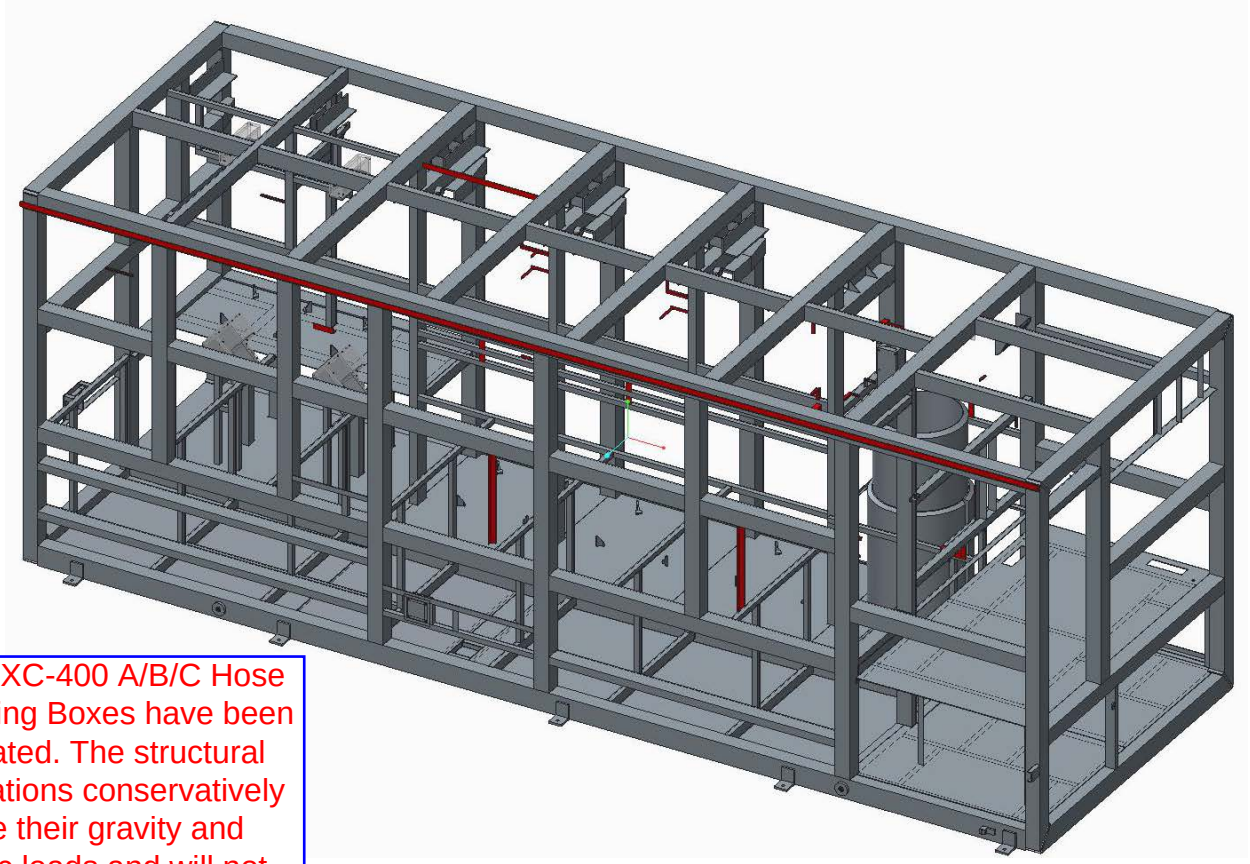

Note: IXC-400 A/B/C Hose Shielding Boxes have been eliminated. The structural calculations conservatively include their gravity and seismic loads and will not be modified.

**Table 13.6-1 Seismic Coefficients for Mechanical and Electrical Components**

| MECHANICAL AND ELECTRICAL COMPONENTS | $a_p$[a] | $R_p$[b] | $\Omega_0$[c] |
|---|---|---|---|
| Air-side HVAC, fans, air handlers, air conditioning units, cabinet heaters, air distribution boxes, and other mechanical components constructed of sheet metal framing. | 2½ | 6 | 2½ |
| Wet-side HVAC, boilers, furnaces, atmospheric tanks and bins, chillers, water heaters, heat exchangers, evaporators, air separators, manufacturing or process equipment, and other mechanical components constructed of high-deformability materials. | 1 | 2½ | 2½ |
| Engines, turbines, pumps, compressors, and pressure vessels not supported on skirts and not within the scope of Chapter 15. | 1 | 2½ | 2½ |
| Skirt-supported pressure vessels not within the scope of Chapter 15. | 2½ | 2½ | 2½ |
| Elevator and escalator components. | 1 | 2½ | 2½ |
| Generators, batteries, inverters, motors, transformers, and other electrical components constructed of high-deformability materials. | 1 | 2½ | 2½ |
| Motor control centers, panel boards, switch gear, instrumentation cabinets, and other components constructed of sheet metal framing. | 2½ | 6 | 2½ |
| Communication equipment, computers, instrumentation, and controls. | 1 | 2½ | 2½ |
| Roof-mounted stacks, cooling and electrical towers laterally braced below their center of mass. | 2½ | 3 | 2½ |
| Roof-mounted stacks, cooling and electrical towers laterally braced above their center of mass. | 1 | 2½ | 2½ |
| Lighting fixtures. | 1 | 1½ | 1½ |
| Other mechanical or electrical components. | 1 | 1½ | 1½ |

| | | |
|---|---|---|
| Height to C.G.= | 122.00 in | IXC-400A |
| Height to Attachment Point= | 122.0 in | Mounted on Angle Framing |
| Total Height from Base "0-0"= | 122.0 in | = 10.17 ft |

## IXC Hose Shielding

| | | | |
|---|---|---|---|
| client | Avantech | by SMV | sheet no. 33 |
| project | TSCR Process Enclosure | date 4/19 | |
| location | Hanford | checked | job no. |
| subject | IXC 400 A/B/C Hose Shielding - Seismic Force | date | 39001 |

**Hose Shielding Box - Non-Building Component, See ASCE 7-10 Table 13.6-1**

**Seismic Force Calculation** (Per ASCE 7-010)

| | | |
|---|---|---|
| Occupancy Category | IV | Per Table 5, TFC-ENG-STD-06 |
| Site Class | D | Per Site Criteria |
| $\rho$= | 1 | ASCE 7-10 Section 13.3.1 |
| $S_{DS}$= | 0.5940 | Per TFC-ENG-STD-06, For Site Class D |
| $I_p$= | 1.5 | ASCE 7-10 Sect 13.1.3 |
| $R_p$= | 1.5 | ASCE 7-10 Table 13.6-1-Other Mech and Elec Componen |
| Limit State "C" Modifier= | 1.2 | TFC-ENG-STD-06 Table 5, SDC-2, Limit State C |
| $R_{pa}$= | 1.25 | ASCE 7-10 Table 13.6-1, Mod. by SDC-2, Limit State C |
| $a_p$= | 1.00 | ASCE 7-10 Table 13.6-1-Motor Control Centers |
| z= | 10.17 ft | Height in structure of Component Attachment |
| h= | 12.50 ft | Average roof height of structure |
| $\Omega_O$= | 1.5 | Will apply for Concrete Anchorage |

**For Nonstructural Components:**

$F_p=0.4a_pS_{DS}W_p/(R_p/I_p)*(1+2z/h)$= **0.749 Wp** $F_p$=ASCE 7-10 Eq 13.3-1] USE

Fp is not required to be taken as greater than

$F_p=1.6S_{DS}I_pW_p$= 1.426 Wp [ASCE 7-10 Eq 13.3-2]

and shall not be taken less than

$F_p=0.3S_{DS}I_pW_p$= 0.267 Wp [ASCE7-10 Eq 13.3-3]

Wp= 1200 lbs For WP-ENCL-002

$F_p$= **899 lbs** Apply at C.G.

**Seismic Load Effect:**

$E=E_h+E_v$ [ASCE Eq 12.4-1] $E_h=\rho Q_E$ [ASCE Eq 12.4-3]

$Q_E=F_p$ [ASCE Eq 12.4-3] $E_v=0.2*S_{DS}*D$ [ASCE Eq 13.3]

$\rho$= 1.00 [ASCE Sect 13.3]

**Seismic load combinations:**

Allowable stress design per ASCE Sect 12.4.3.2

| | | | | |
|---|---|---|---|---|
| $(1.0+0.14S_{DS})D+0.7\rho Q_E$ | = 1.08*D | + 0.70*QE | | [ASCE Eq 2.4.1.5] |
| $(1.0+0.10S_{DS})D+0.525\rho Q_E+0.75L$ | = 1.06*D | + 0.53*QE | + 0.75L | [ASCE Eq 2.4.1.6] |
| $(0.6-0.14S_{DS})D+0.7\rho Q_E$ | = 0.52*D | + 0.70*QE | | [ASCE Eq 2.4.1.8] |

Strength design per ASCE Sect 12.4.2.3

| | | | | |
|---|---|---|---|---|
| $(1.2+0.2S_{DS})D+\rho Q_E+1.0L$ | = 1.32*D | + 1.00*QE | + 1.00L | [ASCE Eq 2.3.2.5] |
| $(0.9-0.2S_{DS})D+\rho Q_E$ | = 0.78*D | + 1.00*QE | | [ASCE Eq 2.3.2.7] |

Strength Design with Overstrength Factor Per ASCE Sect 12.4.3.2

| | | | | |
|---|---|---|---|---|
| $(1.2+0.2S_{DS})D+\Omega_O Q_E+1.0L+0.2S$ | = 1.32*D | + 1.50*QE | + 1.00L | + 0.20S |
| $(0.9-0.2S_{DS})D+\Omega_O Q_E$ | = 0.90*D | + 1.50*QE | | |

Note: IXC-400 A/B/C Hose Shielding Boxes have been eliminated. The structural calculations conservatively include their gravity and seismic loads and will not be modified.

| | | | |
|---|---|---|---|
| client | Avantech | by SMV | sheet no. 34 |
| project | TSCR Process Enclosure | date 4/19 | |
| location | Hanford | checked | job no. |
| subject | Filter Tank Bottom Hose Shielding - Seismic Force | date | 39001 |

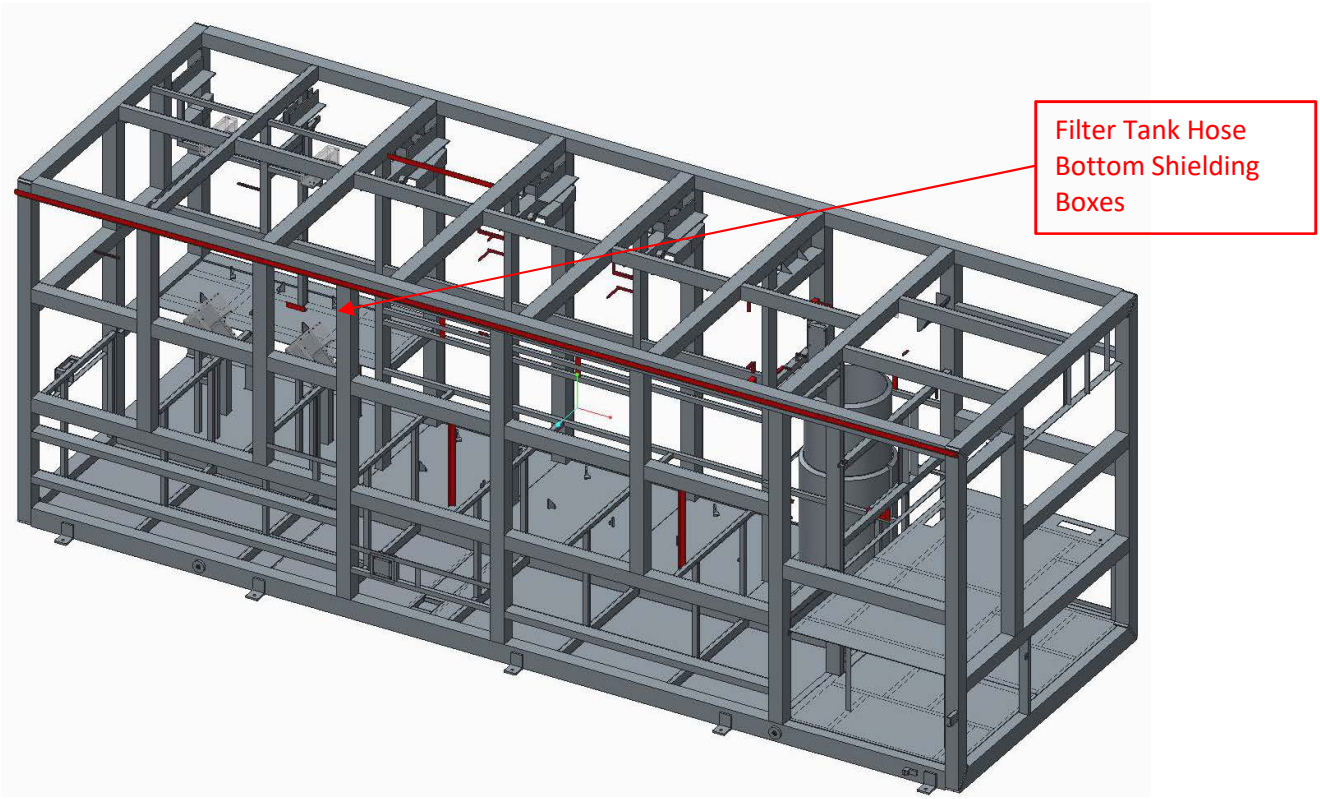


**Table 13.6-1 Seismic Coefficients for Mechanical and Electrical Components**

| MECHANICAL AND ELECTRICAL COMPONENTS | $a_p$[a] | $R_p$[b] | $\Omega_0$[c] |
|---|---|---|---|
| Air-side HVAC, fans, air handlers, air conditioning units, cabinet heaters, air distribution boxes, and other mechanical components constructed of sheet metal framing. | 2½ | 6 | 2½ |
| Wet-side HVAC, boilers, furnaces, atmospheric tanks and bins, chillers, water heaters, heat exchangers, evaporators, air separators, manufacturing or process equipment, and other mechanical components constructed of high-deformability materials. | 1 | 2½ | 2½ |
| Engines, turbines, pumps, compressors, and pressure vessels not supported on skirts and not within the scope of Chapter 15. | 1 | 2½ | 2½ |
| Skirt-supported pressure vessels not within the scope of Chapter 15. | 2½ | 2½ | 2½ |
| Elevator and escalator components. | 1 | 2½ | 2½ |
| Generators, batteries, inverters, motors, transformers, and other electrical components constructed of high-deformability materials. | 1 | 2½ | 2½ |
| Motor control centers, panel boards, switch gear, instrumentation cabinets, and other components constructed of sheet metal framing. | 2½ | 6 | 2½ |
| Communication equipment, computers, instrumentation, and controls. | 1 | 2½ | 2½ |
| Roof-mounted stacks, cooling and electrical towers laterally braced below their center of mass. | 2½ | 3 | 2½ |
| Roof-mounted stacks, cooling and electrical towers laterally braced above their center of mass. | 1 | 2½ | 2½ |
| Lighting fixtures. | 1 | 1½ | 1½ |
| Other mechanical or electrical components. | 1 | 1½ | 1½ |

| | | |
|---|---|---|
| Height to C.G.= | 51.25 in | Filter Bottom Shielding Box |
| Height to Attachment Point= | 51.3 in | Mounted on Angle Framing |
| Total Height from Base "0-0"= | 51.3 in | = 4.27 ft |

# IXC Hose Shielding

| | | | |
|---|---|---|---|
| client | Avantech | by SMV | sheet no. 35 |
| project | TSCR Process Enclosure | date 4/19 | |
| location | Hanford | checked | job no. |
| subject | Filter Hose Bottom Shielding | date | 39001 |

**Hose Shielding Box - Non-Building Component, See ASCE 7-10 Table 13.6-1**

**Seismic Force Calculation** (Per ASCE 7-010)

| | | |
|---|---|---|
| Occupancy Category | IV | Per Table 5, TFC-ENG-STD-06 |
| Site Class | D | Per Site Criteria |
| $\rho$= | 1 | ASCE 7-10 Section 13.3.1 |
| $S_{DS}$= | 0.5940 | Per TFC-ENG-STD-06, For Site Class D |
| $I_p$= | 1.5 | ASCE 7-10 Sect 13.1.3 |
| $R_p$= | 1.5 | ASCE 7-10 Table 13.6-1-Other Mech & Elec Components |
| Limit State "C" Modifier= | 1.2 | TFC-ENG-STD-06 Table 5, SDC-2, Limit State C |
| $R_{pa}$= | 1.25 | ASCE 7-10 Table 13.6-1, Mod. by SDC-2, Limit State C |
| $a_p$= | 1.00 | ASCE 7-10 Table 13.6-1-Motor Control Centers |
| z= | 4.27 ft | Height in structure of Component Attachment |
| h= | 12.50 ft | Average roof height of structure |
| $\Omega_O$= | 1.5 | Will apply for Concrete Anchorage |

**For Nonstructural Components:**

$F_p=0.4a_pS_{DS}W_p/(R_p/I_p)*(1+2z/h)$= **0.480 Wp** $F_p$=ASCE 7-10 Eq 13.3-1] USE

Fp is not required to be taken as greater than

$F_p=1.6S_{DS}I_pW_p$= 1.426 Wp [ASCE 7-10 Eq 13.3-2]

and shall not be taken less than

$F_p=0.3S_{DS}I_pW_p$= 0.267 Wp [ASCE7-10 Eq 13.3-3]

Wp= 270 lbs For WP-ENCL-002

$F_p$= **130 lbs** Apply at C.G.

**Seismic Load Effect:**

$E=E_h+E_v$ [ASCE Eq 12.4-1] $E_h=\rho Q_E$ [ASCE Eq 12.4-3]

$Q_E=F_p$ [ASCE Eq 12.4-3] $E_v=0.2*S_{DS}*D$ [ASCE Eq 13.3]

$\rho$= 1.00 [ASCE Sect 13.3]

**Seismic load combinations:**

Allowable stress design per ASCE Sect 12.4.3.2

| | | | | |
|---|---|---|---|---|
| $(1.0+0.14S_{DS})D+0.7\rho Q_E$ | = 1.08*D | + 0.70*QE | | [ASCE Eq 2.4.1.5] |
| $(1.0+0.10S_{DS})D+0.525\rho Q_E+0.75L$ | = 1.06*D | + 0.53*QE | + 0.75L | [ASCE Eq 2.4.1.6] |
| $(0.6-0.14S_{DS})D+0.7\rho Q_E$ | = 0.52*D | + 0.70*QE | | [ASCE Eq 2.4.1.8] |

Strength design per ASCE Sect 12.4.2.3

| | | | | |
|---|---|---|---|---|
| $(1.2+0.2S_{DS})D+\rho Q_E+1.0L$ | = 1.32*D | + 1.00*QE | + 1.00L | [ASCE Eq 2.3.2.5] |
| $(0.9-0.2S_{DS})D+\rho Q_E$ | = 0.78*D | + 1.00*QE | | [ASCE Eq 2.3.2.7] |

Strength Design with Overstrength Factor Per ASCE Sect 12.4.3.2

| | | | | |
|---|---|---|---|---|
| $(1.2+0.2S_{DS})D+\Omega_O Q_E+1.0L+0.2S$ | = 1.32*D | + 1.50*QE | + 1.00L | + 0.20S |
| $(0.9-0.2S_{DS})D+\Omega_O Q_E$ | = 0.90*D | + 1.50*QE | | |

| | | | |
|---|---|---|---|
| client | Avantech | by SMV | sheet no. 36 |
| project | TSCR Process Enclosure | date 4/19 | |
| location | Hanford | checked | job no. |
| subject | Filter Tank Top Hose Shielding - Seismic Force | date | 39001 |

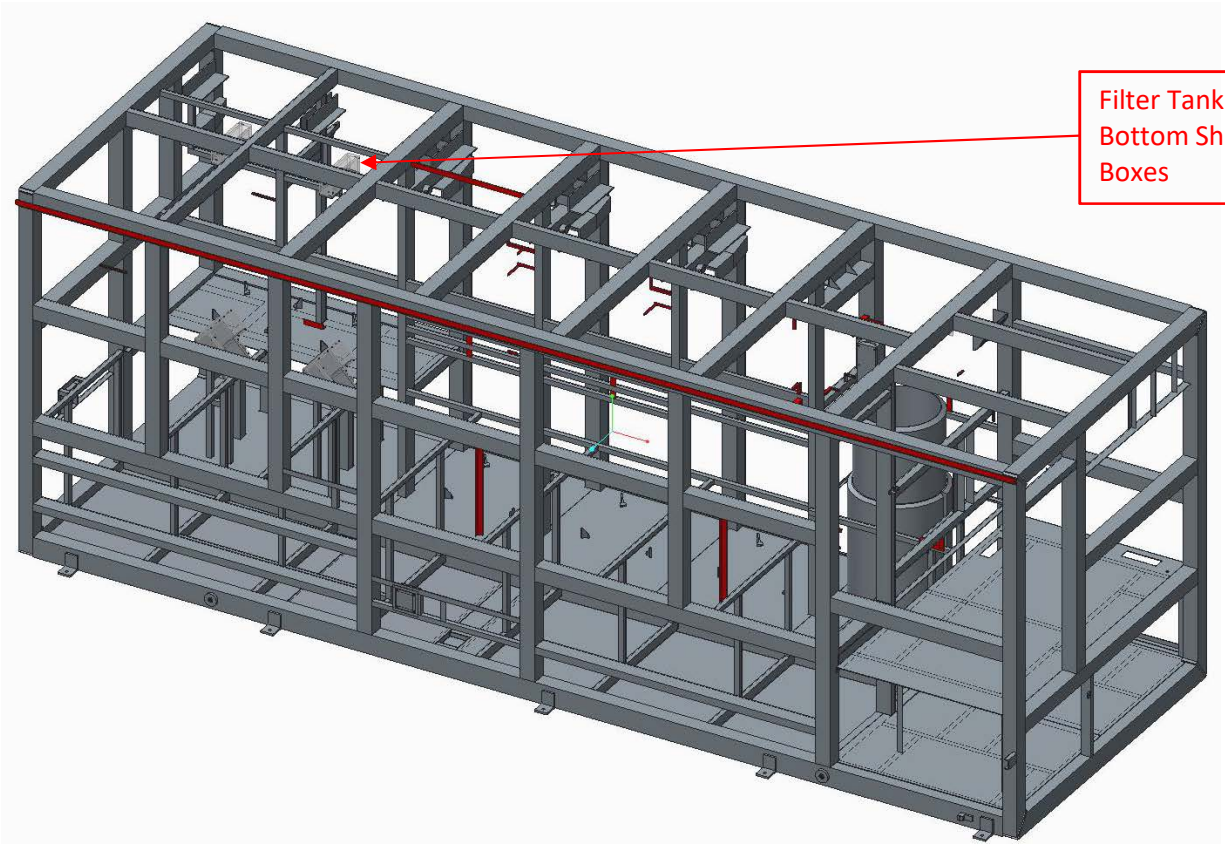


**Table 13.6-1 Seismic Coefficients for Mechanical and Electrical Components**

| MECHANICAL AND ELECTRICAL COMPONENTS | $a_p$[a] | $R_p$[b] | $\Omega_0$[c] |
|---|---|---|---|
| Air-side HVAC, fans, air handlers, air conditioning units, cabinet heaters, air distribution boxes, and other mechanical components constructed of sheet metal framing. | 2½ | 6 | 2½ |
| Wet-side HVAC, boilers, furnaces, atmospheric tanks and bins, chillers, water heaters, heat exchangers, evaporators, air separators, manufacturing or process equipment, and other mechanical components constructed of high-deformability materials. | 1 | 2½ | 2½ |
| Engines, turbines, pumps, compressors, and pressure vessels not supported on skirts and not within the scope of Chapter 15. | 1 | 2½ | 2½ |
| Skirt-supported pressure vessels not within the scope of Chapter 15. | 2½ | 2½ | 2½ |
| Elevator and escalator components. | 1 | 2½ | 2½ |
| Generators, batteries, inverters, motors, transformers, and other electrical components constructed of high-deformability materials. | 1 | 2½ | 2½ |
| Motor control centers, panel boards, switch gear, instrumentation cabinets, and other components constructed of sheet metal framing. | 2½ | 6 | 2½ |
| Communication equipment, computers, instrumentation, and controls. | 1 | 2½ | 2½ |
| Roof-mounted stacks, cooling and electrical towers laterally braced below their center of mass. | 2½ | 3 | 2½ |
| Roof-mounted stacks, cooling and electrical towers laterally braced above their center of mass. | 1 | 2½ | 2½ |
| Lighting fixtures. | 1 | 1½ | 1½ |
| Other mechanical or electrical components. | 1 | 1½ | 1½ |

| | | |
|---|---|---|
| Height to C.G.= | 129.50 in | Filter Bottom Shielding Box |
| Height to Attachment Point= | 129.5 in | Mounted on Angle Framing |
| Total Height from Base "0-0"= | 129.5 in | = 10.79 ft |

# IXC Hose Shielding

| | | | |
|---|---|---|---|
| client | Avantech | by SMV | sheet no. 37 |
| project | TSCR Process Enclosure | date 4/19 | |
| location | Hanford | checked | job no. |
| subject | Filter Tank Top Hose Shielding - Seismic Force | date | 39001 |

**Hose Shielding Box - Non-Building Component, See ASCE 7-10 Table 13.6-1**

**Seismic Force Calculation** (Per ASCE 7-010)

| | | |
|---|---|---|
| Occupancy Category | IV | Per Table 5, TFC-ENG-STD-06 |
| Site Class | D | Per Site Criteria |
| $\rho$= | 1 | ASCE 7-10 Section 13.3.1 |
| $S_{DS}$= | 0.5940 | Per TFC-ENG-STD-06, For Site Class D |
| $I_p$= | 1.5 | ASCE 7-10 Sect 13.1.3 |
| $R_p$= | 1.5 | ASCE 7-10 Table 13.6-1-Other Mech & Elec Components |
| Limit State "C" Modifier= | 1.2 | TFC-ENG-STD-06 Table 5, SDC-2, Limit State C |
| $R_{pa}$= | 1.25 | ASCE 7-10 Table 13.6-1, Mod. by SDC-2, Limit State C |
| $a_p$= | 1.00 | ASCE 7-10 Table 13.6-1-Motor Control Centers |
| z= | 10.79 ft | Height in structure of Component Attachment |
| h= | 12.50 ft | Average roof height of structure |
| $\Omega_O$= | 1.5 | Will apply for Concrete Anchorage |

**For Nonstructural Components:**

$F_p=0.4a_pS_{DS}W_p/(R_p/I_p)*(1+2z/h)$= **0.777 Wp** $F_p$=ASCE 7-10 Eq 13.3-1] USE

Fp is not required to be taken as greater than

$F_p=1.6S_{DS}I_pW_p$= 1.426 Wp [ASCE 7-10 Eq 13.3-2]

and shall not be taken less than

$F_p=0.3S_{DS}I_pW_p$= 0.267 Wp [ASCE7-10 Eq 13.3-3]

Wp= 140 lbs For WP-ENCL-002

$F_p$= **109 lbs** Apply at C.G.

**Seismic Load Effect:**

$E=E_h+E_v$ [ASCE Eq 12.4-1] $E_h=\rho Q_E$ [ASCE Eq 12.4-3]

$Q_E=F_p$ [ASCE Eq 12.4-3] $E_v=0.2*S_{DS}*D$ [ASCE Eq 13.3]

$\rho$= 1.00 [ASCE Sect 13.3]

**Seismic load combinations:**

Allowable stress design per ASCE Sect 12.4.3.2

| | | | | |
|---|---|---|---|---|
| $(1.0+0.14S_{DS})D+0.7\rho Q_E$ | = 1.08*D | + 0.70*QE | | [ASCE Eq 2.4.1.5] |
| $(1.0+0.10S_{DS})D+0.525\rho Q_E+0.75L$ | = 1.06*D | + 0.53*QE | + 0.75L | [ASCE Eq 2.4.1.6] |
| $(0.6-0.14S_{DS})D+0.7\rho Q_E$ | = 0.52*D | + 0.70*QE | | [ASCE Eq 2.4.1.8] |

Strength design per ASCE Sect 12.4.2.3

| | | | | |
|---|---|---|---|---|
| $(1.2+0.2S_{DS})D+\rho Q_E+1.0L$ | = 1.32*D | + 1.00*QE | + 1.00L | [ASCE Eq 2.3.2.5] |
| $(0.9-0.2S_{DS})D+\rho Q_E$ | = 0.78*D | + 1.00*QE | | [ASCE Eq 2.3.2.7] |

Strength Design with Overstrength Factor Per ASCE Sect 12.4.3.2

| | | | | |
|---|---|---|---|---|
| $(1.2+0.2S_{DS})D+\Omega_O Q_E+1.0L+0.2S$ | = 1.32*D | + 1.50*QE | + 1.00L | + 0.20S |
| $(0.9-0.2S_{DS})D+\Omega_O Q_E$ | = 0.90*D | + 1.50*QE | | |

| | | | |
|---|---|---|---|
| client | Avantec | by SMV | sheet no. 38 |
| project | TSCR Process Enclosure | date 5/19 | |
| location | Hanford | checked | job no. |
| subject | Roof Dead Load | date | 39001 |

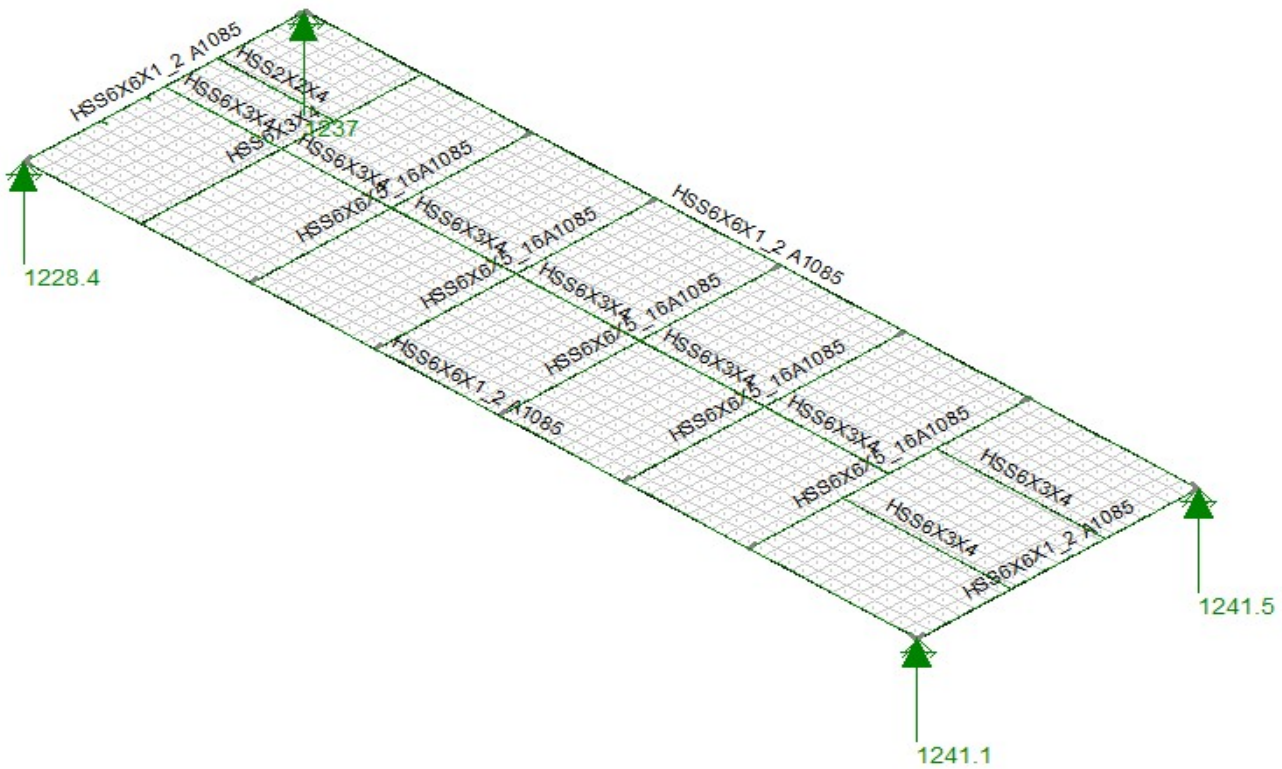


Joint Reactions (By Combination)

| | L... | Joint Label | X [k] | Y [k] | Z [k] | MX [k-in] | MY |
|---|---|---|---|---|---|---|---|
| 1 | 1 | N51 | 0 | 1.228 | 0 | 0 | |
| 2 | 1 | N49 | 0 | 1.237 | 0 | 0 | |
| 3 | 1 | N50 | 0 | 1.242 | 0 | 0 | |
| 4 | 1 | N52 | 0 | 1.241 | 0 | 0 | |
| 5 | 1 | Totals: | 0 | 4.948 | 0 | | |
| 6 | 1 | COG (in): | X: 201.695 | Y: 142 | Z: 63.01 | | |

| | | Weight |
|---|---|---|
| Ceiling Panel - Steel | 0.125 in | 5.10 psf |
| Roof Panel - Aluminum | 0.125 in | 1.76 psf |
| | Subtotal= | 6.86 psf |
| Process Skid Width= | 134.25 in | |
| Process Skid Length= | 408.00 in | |
| Area= | 380.4 ft2 | |

**Perimeter Framing Weight**

| | |
|---|---|
| Weight of Perimeter TS6x6x1/2 | 35.2 lbs/ft |
| Perimeter Dimension in Feet= | 87.7 ft |
| Total Weight of Perimeter TS8x6 = | 3087 lbs |

| | | |
|---|---|---|
| Total Structural Framing= | 4948 lbs | |
| 1/2 Perimeter Weight= | 1544 lbs | |
| Weight Attributed to Roof= | 3404 lbs | |
| Framing Weight Per SF= | 8.95 psf | |
| Total Wt. Per SF Including Roof/Panels= | 15.81 psf | Assume 20 psf to Include Lighting, etc. |

| Beacon Engineers Inc. | client | Avantec | by SMV | sheet no. 39 |
|---|---|---|---|---|
| www.beaconengr.com | project | TSCR Process Enclosure | date 5/19 | |
| | location | Hanford | checked | job no. |
| | subject | Wall Dead Load | date | 39001 |

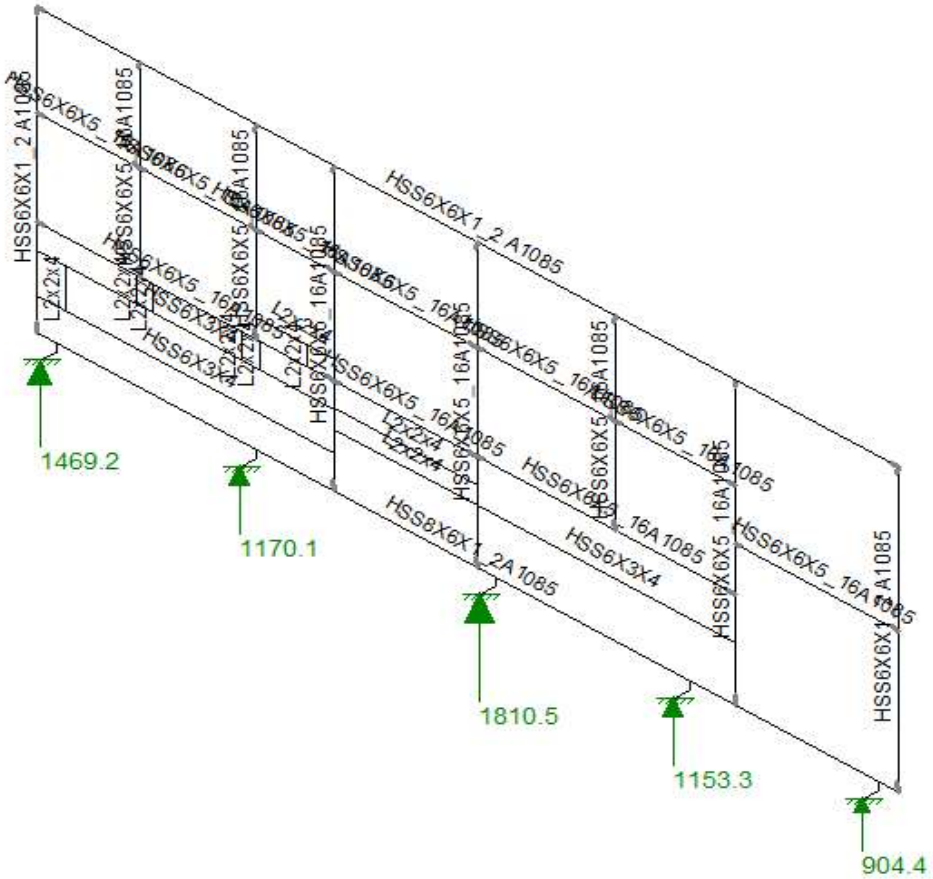


Joint Reactions (By Combination)

| | L... | Joint Label | X [lb] | Y [lb] | Z [lb] | MX [k-in] | MY [k-in] | MZ [k-in] |
|---|---|---|---|---|---|---|---|---|
| 1 | 1 | N5104B | 130.771 | 1170.056 | .279 | 8.194 | -.923 | 17.124 |
| 2 | 1 | N5105A | 44.258 | 1153.256 | 0 | 8.072 | -.31 | 10.848 |
| 3 | 1 | N5106 | -87.087 | 1810.5 | .005 | 12.672 | .612 | -13.597 |
| 4 | 1 | N5107 | -95.968 | 1469.239 | -.275 | 10.283 | .701 | -6.183 |
| 5 | 1 | N5108 | 8.026 | 904.377 | -.008 | 6.33 | -.056 | -.257 |
| 6 | 1 | Totals: | 0 | 6507.428 | 0 | | | |
| 7 | 1 | COG (in): | X: 189.711 | Y: 66.883 | Z: 126.25 | | | |

| | | Weight |
|---|---|---|
| Wall Interior Liner Panel - Steel | 0.125 in | 5.10 psf |
| Wall Exterior Panel - Aluminum | 0.125 in | 1.76 psf |
| | Subtotal= | 6.86 psf |
| Process Skid Height= | 150.00 in | |
| Process Skid Length= | 408.00 in | |
| Area= | 425.0 ft2 | |
| Total Structural Framing= | 6507 lbs | |
| 1/2 Perimeter Weight= | 1704 lbs | |
| Weight Attributed to Wall= | 4803 lbs | |
| Framing Weight Per SF= | 11.30 psf | |
| Total Wt. Per SF Including Wall Panels= | 18.16 psf | Assume 20 psf |

**Perimeter Framing Weight**

| | |
|---|---|
| Weight of HSS 6x6x1/2 Per lin. ft. = | 35.2 lbs/ft |
| Top & Side HSS 6x6 Length = | 57.0 ft |
| Total Weight of Top & Sides HSS6x6 = | 2006 lbs |
| Weight of bottom HSS8x6x1/2 per lineal ft = | 42.1 lbs/ft |
| Lenth of bottom HSS8x6x1/2 | 33.3 ft |
| Total Weight of bottom HSS8x6 = | 1402 lbs |
| Total Wt. of Perimeter Framing = | 3408 lbs |

| Beacon Engineers Inc. www.beaconengr.com | client | Avantec | by SMV | sheet no. 40 |
|---|---|---|---|---|
| | project | TSCR Process Enclosure | date 2/19 | |
| | location | Hanford | checked | job no. |
| | subject | Floor Dead Load | date | 39001 |

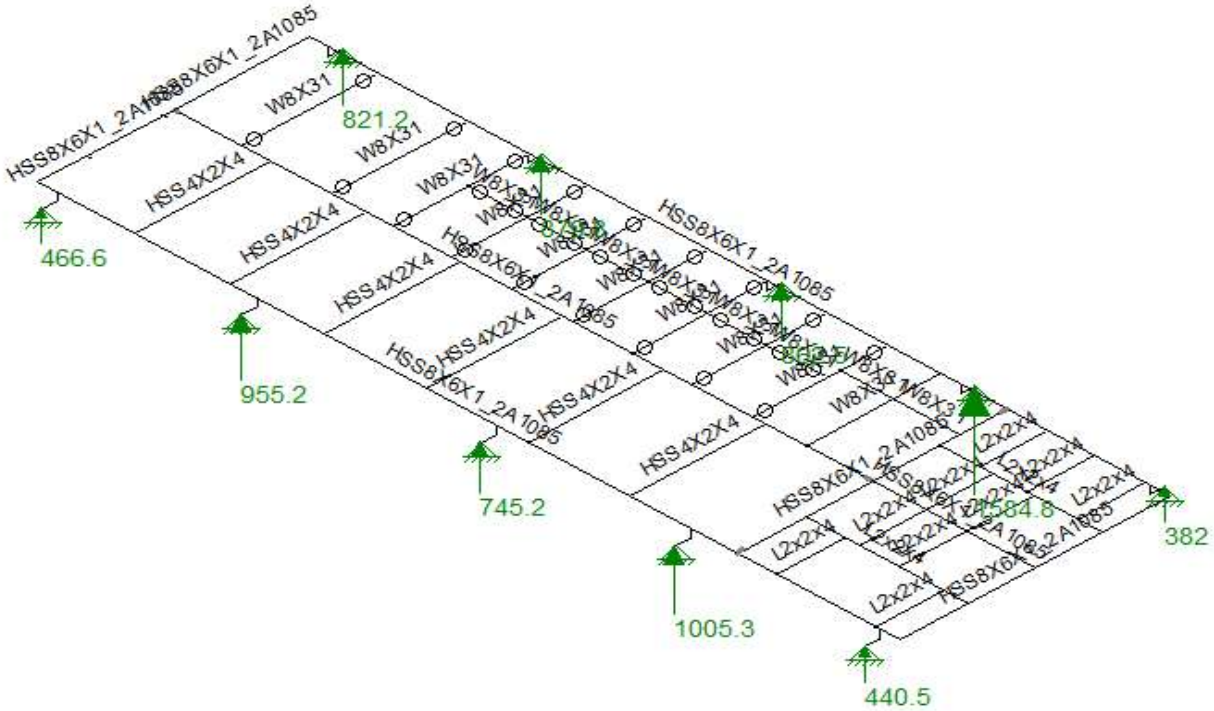


Joint Reactions (By Combination)

| | L... | Joint Label | X [lb] | Y [lb] | Z [lb] | MX [k-in] | MY [k-in] | MZ [k-in] |
|---|---|---|---|---|---|---|---|---|
| 1 | 1 | N5104B | -543.614 | 955.16 | -2289.015 | 0 | 0 | 0 |
| 2 | 1 | N5105A | 335.23 | 1005.327 | -2192.672 | 0 | 0 | 0 |
| 3 | 1 | N5106 | 211.879 | 745.177 | -2272.946 | 0 | 0 | 0 |
| 4 | 1 | N5107 | 113.499 | 466.617 | -2486.832 | 0 | 0 | 0 |
| 5 | 1 | N5108 | -103.391 | 440.456 | -1394.404 | 0 | 0 | 0 |
| 6 | 1 | N5109 | -196.789 | 879.783 | 2277.267 | 0 | 0 | 0 |
| 7 | 1 | N5110 | -54.52 | 1584.8 | 2421.904 | 0 | 0 | 0 |
| 8 | 1 | N5111 | -101.796 | 862.483 | 2105.366 | 0 | 0 | 0 |
| 9 | 1 | N5112 | 105.073 | 821.25 | 2516.05 | 0 | 0 | 0 |
| 10 | 1 | N5113 | 234.429 | 381.973 | 1315.281 | 0 | 0 | 0 |
| 11 | 1 | Totals: | 0 | 8143.024 | 0 | | | |
| 12 | 1 | COG (in): | X: 203.204 | Y: 0 | Z: 55.224 | | | |

**Perimeter Framing Weight**

| | | | |
|---|---|---|---|
| Process Skid Width= | 134.25 in | Weight of Perimeter HSS8x6x1/2= | 42.1 lbs/ft |
| Process Skid Length= | 408.00 in | Perimeter Dimension in Feet= | 87.7 ft |
| Area= | 380.4 ft2 | Total Weight of Perimeter HSS8x6 = | 3688 lbs |

| | | |
|---|---|---|
| Total Structural Framing= | 8143 lbs | |
| 1/2 Perimeter Weight= | 1844 lbs | |
| Weight Attributed to Floor Level= | 6299 lbs | |
| Framing Weight Per SF= | 16.56 psf | |
| Total Wt. Per SF Including Roof/Panels= | 16.56 psf | Assume 20 psf to Include Sump Pan, etc. |

| | | | |
|---|---|---|---|
| client | Avantech | by SMV | sheet no. 41 |
| project | TSCR Process Enclosure | date 2/19 | |
| location | Hanford | checked | job no. |
| subject | Process Enclosure Vertical Seismic Force Distribution | date | 39001 |

**12.8.3 Vertical Distribution of Seismic Forces.** The lateral seismic force ($F_x$) (kip or kN) induced at any level shall be determined from the following equations:

$$F_x = C_{vx}V \qquad (12.8\text{-}11)$$

and

$$C_{vx} = \frac{w_x h_x^k}{\sum_{i=1}^{n} w_i h_i^k} \qquad (12.8\text{-}12)$$

where

$C_{vx}$ = vertical distribution factor
$V$ = total design lateral force or shear at the base of the structure (kip or kN)
$w_i$ and $w_x$ = the portion of the total effective seismic weight of the structure ($W$) located or assigned to level $i$ or $x$
$h_i$ and $h_x$ = the height (ft or m) from the base to level $i$ or $x$
$k$ = an exponent related to the structure period as follows:
for structures having a period of 0.5 s or less, $k = 1$
for structures having a period of 2.5 s or more, $k = 2$
for structures having a period between 0.5 and 2.5 s, $k$ shall be 2 or shall be determined by linear interpolation between 1 and 2

Check approximate fundamental period using ASCE Eq 12.8-7:

| | | | | |
|---|---|---|---|---|
| $C_t$= | 0.028 | | $h_h$= | 12.5 ft |
| x= | 0.8 | | | |
| $T=C_t*h_n^x$= | 0.21 sec | | | |
| k= | 1.00 | ASCE 12.8.3 | | |
| Risa Natural Frequency= | 0.27 sec | See Next Page | | |
| Process Encl Oper Weight "W"= | 165.00 kips | From Avantech Drawing H-14-111244 Rev B | | |
| $C_S$= | 0.43 | | | |
| Total Base Shear "V"= | 70.95 kips | Total Base Shear with Operating Equipment | | |
| IXC-150 Operating Weight= | 26.79 kips | Ion Exchange Column Operating Weight | | |
| Count IXC-150= | 3 Total | | | |
| Total IXC-150 Mass= | 80.37 kips | Total Weight Ion Exchange Columms | | |
| WP-TK-550 Operating Weight= | 4.69 kips | Delay Tank Operating Weight | | |
| Count WP-TK-550= | 1 Total | | | |
| Total Wp-TK-550 Mass= | 4.69 kips | Total Weight Delay Tank | | |
| WP-FLT-325 Operating Weights= | 8.39 kips | Filter Tank Operating Weight | | |
| Count WP-FLT-325= | 2 Total | | | |
| Total WP-FLT-325 Mass= | 16.78 kips | | | |
| Total Vessel/Tank Weights= | 101.83 kips | Total Vessel Operating Weights | | |

| | | | |
|---|---|---|---|
| client | Avantech | by SMV | sheet no. 42 |
| project | TSCR Process Enclosure | date 2/19 | |
| location | Hanford | checked | job no. |
| subject | Process Enclosure Vertical Seismic Force Distribution | date | 39001 |

| | | |
|---|---|---|
| Process Encl Oper Weight "W"= | 165.00 kips | |
| Total Vessel/Tank Weights= | 101.83 kips | |
| Piping Weight= | 9.60 kips | |
| Gamma Monitors= | 0.93 kips | |
| WP-ENCL-002= | 0.75 kips | |
| WP-ENCL-004= | 0.30 kips | |
| Air Receiver Tank= | 0.21 kips | |
| Building Weight without Equip/Comp= | 51.38 kips | |
| $C_S$= | 0.43 | |
| Base Shear Building Only $V=C_SW$= | 22.09 kips | |
| | | |
| Unit Dead Load Roof= | 20.00 psf | |
| Skid Length= | 34.00 ft | |
| Skid Width= | 11.19 ft | |
| Roof Area= | 380.4 ft2 | |
| Roof Seismic Mass= | 7.61 kips | |
| Unit Dead Load Walls= | 20.00 psf | |
| Wall Height= | 12.50 ft | |
| Wall Seismic Mass= | 22.59 kips | Perimeter x Height x Unit DL Walls |
| Unit Dead Load Floor= | 20.00 psf | |
| Floor Seismic Mass= | 7.61 kips | |
| Roof Weight= | 7.61 kips | |
| 1/2 Wall Weight= | 11.30 kips | |
| ***Effective Seismic Weight @ Roof=*** | ***18.90 kips*** | |
| | | |
| Floor Weight= | 7.61 kips | |
| 1/2 Wall Weight= | 11.30 kips | |
| ***Effective Seismic Weight @ Floor=*** | ***18.90 kips*** | |
| | | |
| ***Eff. Seismic Weight @ Platform=*** | ***13.57 kips*** | |
| Platform Area= | 251.00 ft2 | |
| Area Load on Platform Level= | 54.08 psf | |

Lengths and Width in Risa 3D, based on Center to Center Members

| | |
|---|---|
| Length= | 33.33 ft |
| Width= | 10.52 ft |
| | 350.6 ft2 |

| Level | Weight "$w_x$" | Height "$h_x$" | $w_xh_x^k$ | $C_{vx} = w_xh_x/(\Sigma w_xh_x^k)$ | $F_x=C_{vx}V$ | Risa 3D Area Load |
|---|---|---|---|---|---|---|
| Roof | 18.90 kips | 12.50 ft | 236.3 | 0.80 | 17.59 kips | 50.16 psf |
| Platform | 13.57 kips | 4.00 ft | 54.3 | 0.18 | 4.04 kips | 16.10 psf |
| 1st Floor | 18.90 kips | 0.33 ft | 6.2 | 0.02 | 0.46 kips | 1.32 psf |
| Building Only Weight= | 51.38 kips | | | Total Base Shear Building Only= | 22.09 kips | |

| | | | |
|---|---|---|---|
| client | Avantech | by SMV | sheet no. 43 |
| project | TSCR Process Enclosure | date 2/19 | |
| location | Hanford | checked | job no. |
| subject | Process Enclosure Vertical Seismic Force Distribution | date | 39001 |

| | | Equipment Fp or Cs | Shear |
|---|---|---|---|
| Total IXC-150 Mass= | 80.37 kips | 0.46 | 36.7 kips |
| IXC 400 A/B/C Hose Shielding= | 3.60 kips | 0.75 | 2.7 kips |
| Total Wp-TK-550 Mass= | 4.69 kips | 0.53 | 2.48 kips |
| WP-TK-550 Shielding= | 6.60 kips | 0.53 | 3.50 kips |
| Total WP-FLT-325 Mass= | 16.78 kips | 0.45 | 7.55 kips |
| WP-FLT Top Hose Shielding= | 0.28 kips | 0.78 | 0.22 kips |
| WP-FLT Bot Hose Shielding= | 0.54 kips | 0.48 | 0.26 kips |
| Piping Weight= | 9.60 kips | 0.35 | 3.36 kips |
| Gamma Monitors= | 0.93 kips | 0.62 | 0.58 kips |
| WP-ENCL-002= | 0.75 kips | 0.42 | 0.32 kips |
| WP-ENCL-004= | 0.30 kips | 0.42 | 0.13 kips |
| Air Receiver Tank= | 0.21 kips | 0.43 | 0.09 kips |
| | | Equipment Shear= | 57.9 kips |
| | | Building Only Shear= | 22.1 kips |
| | | Total Shear= | 80.0 kips |

**For Seismic Force Parallel to Enclosure Width (East-West Direction)**

| | | |
|---|---|---|
| Roof Accidental Torsion= | 29.90 ft-kips | Based on Story Shear x 5% of Length |
| Platform Accidental Torsion= | 6.87 ft-kips | " " |
| 1st Floor Accidental Torsion= | 0.79 ft-kips | " " |

**For Seismic Force Parallel to Enclosure Length (North-South Direction)**

| | | |
|---|---|---|
| Roof Accidental Torsion= | 9.84 ft-kips | Based on Story Shear x 5% of Width |
| Platform Accidental Torsion= | 2.26 ft-kips | " " |
| 1st Floor Accidental Torsion= | 0.26 ft-kips | " " |

## ASCE 7-10 Wind Load on MWFRS Per Directional Procedure Section 27.4

| | | | | | | | | | | | |
|---|---|---|---|---|---|---|---|---|---|---|---|
| | Risk Category | IV | Assumed; IBC Table 1604.5, ASCE 7-10 Table1.5-1 | | | | | | | | |
| | V= | 115 mph | Exposure C, TFC-END-STD-06, Table 4, WDC-2 | | | | | | | | |
| | $q_z=0.00256K_zK_{zt}K_dV^2I$ | | (Eqn 6-15) | | | | | | | | |
| | $K_z$= | 0.85 | Exposure C, Table 29.3-1, Ht= 0-15 ft | | | | | | | | |
| | $K_{zt}$= | 1 | Flat Terrain Assumed | | | | | | | | |
| | $K_d$= | 0.85 | ASCE 7-10 Table 26.6-1, Building MWFRS Assumed | | | | | | | | |
| | $V^2$= | 13225 | | | | | | | | | |
| | I= | 1.00 | Does not vary by Occupancy Category in IBC 2015 | | | | | | | | |
| | $q_z$= | **24.5 psf** | | | | | | | | | |
| Design Wind Loads on Partially Enclosed Building; 6.5.12 | | | | | | | | | | | |
| | $p=qGC_P-q_i(Gcpi)$ | | (Eqn 27.4-1) Let $q=q_i=q_h=q_z$ | | | | | | | | |
| | G= | 0.85 | ASCE 7-10 Section 26.9.4 | | | | | | | | |
| | **North-South Wind Direction - Parallel to Length of Process Enclosure** | | | | | | | | | | |
| | L= | 34.00 ft | Hrz Dim Measured Parallel to Wind Direction | | | | + = towards surface | | | L/B= | 3.04 |
| | B= | 11.19 ft | Hrz Dim Measured Normal to Wind Direction | | | | -- = away from surface | | | h/L= | 0.37 |
| | h= | 12.50 ft | Roof angle | | | | 0.00 deg | | | | |
| | | **Windward Wall** | | **Roof** | | | | | **Leeward Wall** | | **Side Wall** |
| | | | | (0-h/2) | (h/2-h) | (h-2h) | (>2h) | | | | |
| | | L/B=All Values | | 6.25 ft | 6.25 ft | 12.50 ft | 9.00 ft | | L/B= 3.04 | | L/B=All Values |
| From ASCE 7-10 Figure 27.4-1 | | $C_P$ | $GC_{Pi}$ | $C_P$ (0-h/2) | $C_P$ (h/2-h) | $C_P$ (h-2h) | $C_P$ (>2h) | $GC_{Pi}$ | $C_P$ | $GC_{Pi}$ | $C_P$ | $GC_{Pi}$ |
| Load Case A (Pos Int Press)= | | 0.8 | 0.55 | -0.90 | -0.90 | -0.50 | -0.30 | 0.55 | -0.25 | 0.55 | -0.70 | 0.55 |
| | | | | -0.18 | -0.18 | -0.18 | -0.18 | 0.55 | | | | |
| Load Case B (Neg Int Press)= | | 0.8 | -0.55 | -0.90 | -0.90 | -0.50 | -0.30 | -0.55 | -0.25 | -0.55 | -0.70 | -0.55 |
| | | | | -0.18 | -0.18 | -0.18 | -0.18 | -0.55 | | | | |
| | $p_A$= | 3.2 psf | | -32.2 psf | -32.2 psf | -23.8 psf | -19.7 psf | | -18.7 psf | | -28.0 psf | |
| | | | | -17.2 psf | -17.2 psf | -17.2 psf | -17.2 psf | | | | | |
| | $p_B$= | 30.1 psf | | -5.3 psf | -5.3 psf | 3.1 psf | 7.2 psf | | 8.3 psf | | -1.1 psf | |
| | | | | 9.7 psf | 9.7 psf | 9.7 psf | 9.7 psf | | | | | |
| | | **Forces on MWFRS Areas** | | | | | | | | | | |
| | | Windward Wall | Leeward Wall | Total Wall Shear | Side Walls | Roof Forces Per Zone | | | | | | |
| | | | | | | (0-h/2) | (h/2-h) | (h-2h) | (>2h) | | | |
| | | | | | | Ltrib=6.3 ft | Ltrib=6.3 ft | Ltrib=12.5 ft | Ltrib=9.0 ft | Total | | |
| | Wall/Roof Areas= | 139.9 ft2 | 139.9 ft2 | | 425.0 ft2 | 69.9 ft2 | 69.9 ft2 | 139.9 ft2 | 100.7 ft2 | | | |
| Load Case A (Pos Int Press)= | | 445 lbs | -2609 lbs | 3054 lbs | -11903 lbs | -2250 lbs | -2250 lbs | -3336 lbs | -1983 lbs | -9818 lbs | | |
| | | | | | | -1203 lbs | -1203 lbs | -2405 lbs | -1732 lbs | -6542 lbs | | |
| Load Case B (Neg Int Press)= | | 4208 lbs | 1155 lbs | 3054 lbs | -468 lbs | -368 lbs | -368 lbs | 428 lbs | 727 lbs | 419 lbs | | |
| | | | | | | 679 lbs | 679 lbs | 1358 lbs | 978 lbs | 3695 lbs | | |
| | **East-West Wind - Parallel to Width of Process Enclosure** | | | | | | | | | | | |
| | L= | 11.19 ft | Hrz Dim Measured Parallel to Wind Direction | | | | + = towards surface | | | L/B= | 0.34 |
| | B= | 33.33 ft | Hrz Dim Measured Normal to Wind Direction | | | | -- = away from surface | | | h/L= | 1.12 |
| | h= | 12.50 ft | Roof angle | | | | 0.00 deg | | | | |
| | | Windward Wall | | Roof | | | | | Leeward Wall | | Side Wall |
| | | | | (0-h/2) | (h/2-h) | (h-2h) | (>2h) | | | | |
| | | L/B=All Values | | 6.25 ft | 4.94 ft | 0.00 ft | 0.00 ft | | L/B= 0.34 | | L/B=All Values |
| From ASCE 7-10 Figure 27.4-1 | | $C_P$ | $GC_{Pi}$ | $C_P$ (0-h/2) | $C_P$ (h/2-h) | $C_P$ (h-2h) | $C_P$ (>2h) | $GC_{Pi}$ | $C_P$ | $GC_{Pi}$ | $C_P$ | $GC_{Pi}$ |
| Load Case A (Pos Int Press)= | | 0.8 | 0.55 | -1.30 | -0.70 | -0.70 | -0.70 | 0.55 | -0.50 | 0.55 | -0.70 | 0.55 |
| | | | | -0.18 | -0.18 | -0.18 | -0.18 | 0.55 | | | | |
| Load Case B (Neg Int Press)= | | 0.8 | -0.55 | -1.30 | -0.70 | -0.70 | -0.70 | -0.55 | -0.50 | -0.55 | -0.70 | -0.55 |
| | | | | -0.18 | -0.18 | -0.18 | -0.18 | -0.55 | | | | |
| | $p_A$= | 3.2 psf | | -40.5 psf | -28.0 psf | -28.0 psf | -28.0 psf | | -23.8 psf | | -28.0 psf | |
| | | | | -17.2 psf | -17.2 psf | -17.2 psf | -17.2 psf | | | | | |
| | $p_B$= | 30.1 psf | | -13.6 psf | -1.1 psf | -1.1 psf | -1.1 psf | | 3.1 psf | | -1.1 psf | |
| | | | | 9.7 psf | 9.7 psf | 9.7 psf | 9.7 psf | | | | | |
| | | **Forces on MWFRS Areas** | | | | | | | | | | |
| | | Windward Wall | Leeward Wall | Total Wall Shear | Side Walls | Roof Forces Per Zone | | | | | | |
| | | | | | | (0-h/2) | (h/2-h) | (h-2h) | (>2h) | | | |
| | | | | | | Ltrib=6.3 ft | Ltrib=4.9 ft | Ltrib=0.0 ft | Ltrib=0.0 ft | Total | | |
| | Wall/Roof Areas= | 416.6 ft2 | 416.6 ft2 | | 139.9 ft2 | 208.3 ft2 | 164.7 ft2 | 0.0 ft2 | 0.0 ft2 | | | |
| Load Case A (Pos Int Press)= | | 1325 lbs | -9936 lbs | 11261 lbs | -3918 lbs | -8433 lbs | -4611 lbs | 0 lbs | 0 lbs | -13045 lbs | | |
| | | | | | | -3582 lbs | -2831 lbs | 0 lbs | 0 lbs | -6413 lbs | | |
| Load Case B (Neg Int Press)= | | 12535 lbs | 1274 lbs | 11261 lbs | -154 lbs | -2828 lbs | -181 lbs | 0 lbs | 0 lbs | -3009 lbs | | |
| | | | | | | 2023 lbs | 1599 lbs | 0 lbs | 0 lbs | 3622 lbs | | |

| | | | |
|---|---|---|---|
| client | Avantech | by SMV | sheet no. 45 |
| project | TSCR Demonstration Project | date 5/19 | |
| location | Hanford | checked | job no. |
| subject | Process Enclosure Wind Design | date | 39001 |

**Components and Cladding – Method 1** | **h ≤ 60 ft.**

**Figure30.5-1** | **Design Wind Pressures** | **Walls & Roofs**

**Enclosed Buildings**

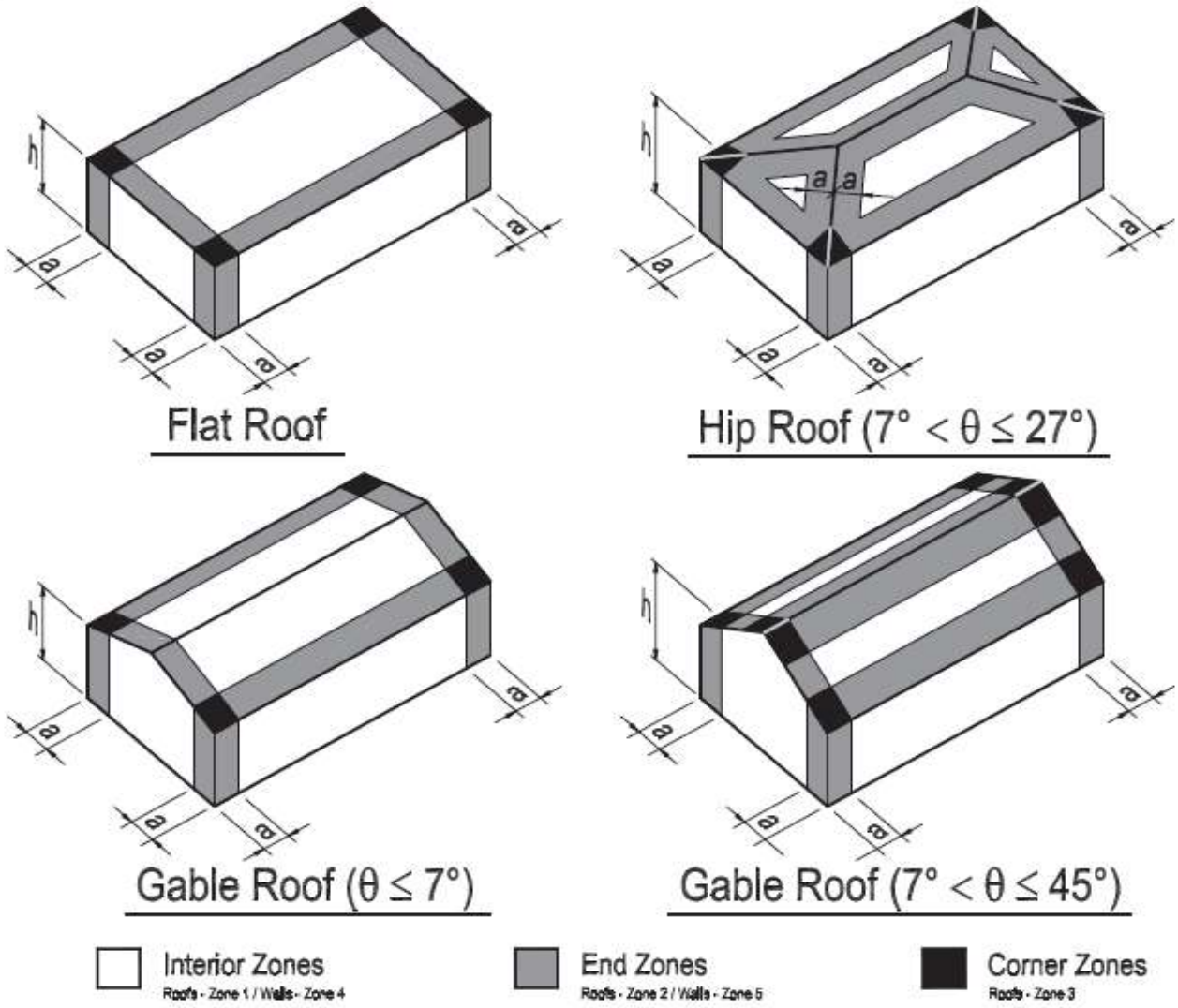


Notes:

1. Pressures shown are applied normal to the surface, for exposure B, at h=30 ft (9.1m). Adjust to other conditions using Equation 30.5-1.
2. Plus and minus signs signify pressures acting toward and away from the surfaces, respectively.
3. For hip roofs with $\theta \leq 25°$, Zone 3 shall be treated as Zone 2.
4. For effective wind areas between those given, value may be interpolated, otherwise use the value associated with the lower effective wind area.
5. Notation:
   *a:* 10 percent of least horizontal dimension or 0.4h, whichever is smaller, but not less than either 4% of least horizontal dimension or 3 ft (0.9 m).
   *h:* Mean roof height, in feet (meters), except that eave height shall be used for roof angles <10°.
   *θ:* Angle of plane of roof from horizontal, in degrees.

## PART 2: LOW-RISE BUILDINGS (SIMPLIFIED)

### 30.5 BUILDING TYPES

The provisions of Section 30.5 are applicable to an enclosed

- Low-rise building (see definition in Section 26.2) or
- Building with $h \leq 60$ ft (18.3 m).

The building has a flat roof, gable roof, or hip roof. The steps required for the determination of wind loads on components and cladding for these building types are shown in Table 30.5-1.

**30.5.1 Conditions.** For the design of components and cladding the building shall comply with all the following conditions:

1. The mean roof height $h$ must be less than or equal to 60 ft (18.3 m) [$h \leq 60$ ft (18.3 m)].
2. The building is enclosed as defined in Section 26.2 and conforms to the wind-borne debris provisions of Section 26.10.3.
3. The building is a regular-shaped building or structure as defined in Section 26.2.
4. The building does not have response characteristics making it subject to across-wind loading, vortex shedding, or instability due to galloping or flutter; and it does not have a site location for which channeling effects or buffeting in the wake of upwind obstructions warrant special consideration.
5. The building has either a flat roof, a gable roof with $\theta \leq 45°$, or a hip roof with $\theta \leq 27°$.

**30.5.2 Design Wind Pressures.** Net design wind pressures, $p_{net}$, for component and cladding of buildings designed using the procedure specified herein represent the net pressures (sum of internal and external) that shall be applied normal to each building surface as shown in Fig. 30.5-1. $p_{net}$ shall be determined by the following equation:

$$p_{net} = \lambda K_{zt} p_{net30} \qquad (30.5\text{-}1)$$

where

$\lambda$ = adjustment factor for building height and exposure from Fig. 30.5-1

$K_{zt}$ = topographic factor as defined in Section 26.8 evaluated at 0.33 mean roof height, $0.33h$

$p_{net30}$ = net design wind pressure for Exposure B, at $h = 30$ ft (9.1 m), from Fig. 30.5-1

**User Note:** Part 2 of Chapter 30 is a simplified method to determine wind pressures on C&C of *enclosed low-rise buildings* having flat, gable, or hip roof shapes. The provisions of Part 2 are based on the envelope procedure of Part 1 with *wind pressures determined from a table* and adjusted as appropriate.

**Table 30.5-1 Steps to Determine C&C Wind Loads for Enclosed Low-Rise Buildings (Simplified Method)**

**Step 1:** Determine risk category, see Table 1.5-1

**Step 2:** Determine the basic wind speed, $V$, for applicable risk category see Figure 26.5-1A, B, or C

**Step 3:** Determine wind load parameters:
- ➢ Exposure category B, C, or D, see Section 26.7
- ➢ Topographic factor, $K_{zt}$, see Section 26.8 and Figure 26.8-1

**Step 4:** Enter figure to determine wind pressures at h = 30 ft., $p_{net30}$, see Fig. 30.5-1

**Step 5:** Enter figure to determine adjustment for building height and exposure, $\lambda$, see Fig. 30.5-1

**Step 6:** Determine adjusted wind pressures, $p_{net}$, see Eq. 30.5-1.

**Adjustment Factor for Building Height and Exposure, $\lambda$**

| Mean roof height (ft) | Exposure B | Exposure C | Exposure D |
|---|---|---|---|
| 15 | 1.00 | 1.21 | 1.47 |
| 20 | 1.00 | 1.29 | 1.55 |
| 25 | 1.00 | 1.35 | 1.61 |
| 30 | 1.00 | 1.40 | 1.66 |
| 35 | 1.05 | 1.45 | 1.70 |
| 40 | 1.09 | 1.49 | 1.74 |
| 45 | 1.12 | 1.53 | 1.78 |
| 50 | 1.16 | 1.56 | 1.81 |
| 55 | 1.19 | 1.59 | 1.84 |
| 60 | 1.22 | 1.62 | 1.87 |

| | | | |
|---|---|---|---|
| client | Avantech | by SMV | sheet no. 47 |
| project | TSCR Demonstration Project | date 5/19 | |
| location | Hanford | checked | job no. |
| subject | Process Enclosure Wind Design | date | 39001 |

**Components and Cladding – Method 1** | **h ≤ 60 ft.**

**Figure 30.5-1 (cont'd)** | **Design Wind Pressures**

**Enclosed Buildings** | **Walls & Roofs**

**Net Design Wind Pressure, $p_{net30}$ (psf)** *(Exposure B at h = 30 ft.)*

| | Zone | Effective wind area (sf) | Basic Wind Speed V (mph) | | | | | | | | | | | | | | | | | |
|---|---|---|---|---|---|---|---|---|---|---|---|---|---|---|---|---|---|---|---|---|
| | | | 110 | | 115 | | 120 | | 130 | | 140 | | 150 | | 160 | | 180 | | 200 | |
| Roof 0 to 7 degrees | 1 | 10 | 8.9 | -21.8 | 9.7 | -23.8 | 10.5 | -25.9 | 12.4 | -30.4 | 14.3 | -35.3 | 16.5 | -40.5 | 18.7 | -46.1 | 23.7 | -58.3 | 29.3 | -72.0 |
| | 1 | 20 | 8.3 | -21.2 | 9.1 | -23.2 | 9.9 | -25.2 | 11.6 | -29.6 | 13.4 | -34.4 | 15.4 | -39.4 | 17.6 | -44.9 | 22.2 | -56.8 | 27.4 | -70.1 |
| | 1 | 50 | 7.6 | -20.5 | 8.3 | -22.4 | 9.0 | -24.4 | 10.6 | -28.6 | 12.3 | -33.2 | 14.1 | -38.1 | 16.0 | -43.3 | 20.3 | -54.8 | 25.0 | -67.7 |
| | 1 | 100 | 7.0 | -19.9 | 7.7 | -21.8 | 8.3 | -23.7 | 9.8 | -27.8 | 11.4 | -32.3 | 13.0 | -37.0 | 14.8 | -42.1 | 18.8 | -53.3 | 23.2 | -65.9 |
| | 2 | 10 | 8.9 | -36.5 | 9.7 | -39.9 | 10.5 | -43.5 | 12.4 | -51.0 | 14.3 | -59.2 | 16.5 | -67.9 | 18.7 | -77.3 | 23.7 | -97.8 | 29.3 | -120.7 |
| | 2 | 20 | 8.3 | -32.6 | 9.1 | -35.7 | 9.9 | -38.8 | 11.6 | -45.6 | 13.4 | -52.9 | 15.4 | -60.7 | 17.6 | -69.0 | 22.2 | -87.4 | 27.4 | -107.9 |
| | 2 | 50 | 7.6 | -27.5 | 8.3 | -30.1 | 9.0 | -32.7 | 10.6 | -38.4 | 12.3 | -44.5 | 14.1 | -51.1 | 16.0 | -58.2 | 20.3 | -73.6 | 25.0 | -90.9 |
| | 2 | 100 | 7.0 | -23.6 | 7.7 | -25.8 | 8.3 | -28.1 | 9.8 | -33.0 | 11.4 | -38.2 | 13.0 | -43.9 | 14.8 | -50.0 | 18.8 | -63.2 | 23.2 | -78.1 |
| | 3 | 10 | 8.9 | -55.0 | 9.7 | -60.1 | 10.5 | -65.4 | 12.4 | -76.8 | 14.3 | -89.0 | 16.5 | -102.2 | 18.7 | -116.3 | 23.7 | -147.2 | 29.3 | -181.7 |
| | 3 | 20 | 8.3 | -45.5 | 9.1 | -49.8 | 9.9 | -54.2 | 11.6 | -63.6 | 13.4 | -73.8 | 15.4 | -84.7 | 17.6 | -96.3 | 22.2 | -121.9 | 27.4 | -150.5 |
| | 3 | 50 | 7.6 | -33.1 | 8.3 | -36.1 | 9.0 | -39.3 | 10.6 | -46.2 | 12.3 | -53.5 | 14.1 | -61.5 | 16.0 | -69.9 | 20.3 | -88.5 | 25.0 | -109.3 |
| | 3 | 100 | 7.0 | -23.6 | 7.7 | -25.8 | 8.3 | -28.1 | 9.8 | -33.0 | 11.4 | -38.2 | 13.0 | -43.9 | 14.8 | -50.0 | 18.8 | -63.2 | 23.2 | -78.1 |
| Wall | 4 | 10 | 21.8 | -23.6 | 23.8 | -25.8 | 25.9 | -28.1 | 30.4 | -33.0 | 35.3 | -38.2 | 40.5 | -43.9 | 46.1 | -50.0 | 58.3 | -63.2 | 72.0 | -78.1 |
| | 4 | 20 | 20.8 | -22.6 | 22.7 | -24.7 | 24.7 | -26.9 | 29.0 | -31.6 | 33.7 | -36.7 | 38.7 | -42.1 | 44.0 | -47.9 | 55.7 | -60.6 | 68.7 | -74.8 |
| | 4 | 50 | 19.5 | -21.3 | 21.3 | -23.3 | 23.2 | -25.4 | 27.2 | -29.8 | 31.6 | -34.6 | 36.2 | -39.7 | 41.2 | -45.1 | 52.2 | -57.1 | 64.4 | -70.5 |
| | 4 | 100 | 18.5 | -20.4 | 20.2 | -22.2 | 22.0 | -24.2 | 25.9 | -28.4 | 30.0 | -33.0 | 34.4 | -37.8 | 39.2 | -43.1 | 49.6 | -54.5 | 61.2 | -67.3 |
| | 4 | 500 | 16.2 | -18.1 | 17.7 | -19.8 | 19.3 | -21.5 | 22.7 | -25.2 | 26.3 | -29.3 | 30.2 | -33.6 | 34.3 | -38.2 | 43.5 | -48.4 | 53.7 | -59.8 |
| | 5 | 10 | 21.8 | -29.1 | 23.8 | -31.9 | 25.9 | -34.7 | 30.4 | -40.7 | 35.3 | -47.2 | 40.5 | -54.2 | 46.1 | -61.7 | 58.3 | -78.0 | 72.0 | -96.3 |
| | 5 | 20 | 20.8 | -27.2 | 22.7 | -29.7 | 24.7 | -32.4 | 29.0 | -38.0 | 33.7 | -44.0 | 38.7 | -50.5 | 44.0 | -57.5 | 55.7 | -72.8 | 68.7 | -89.9 |
| | 5 | 50 | 19.5 | -24.6 | 21.3 | -26.9 | 23.2 | -29.3 | 27.2 | -34.3 | 31.6 | -39.8 | 36.2 | -45.7 | 41.2 | -52.0 | 52.2 | -65.8 | 64.4 | -81.3 |
| | 5 | 100 | 18.5 | -22.6 | 20.2 | -24.7 | 22.0 | -26.9 | 25.9 | -31.6 | 30.0 | -36.7 | 34.4 | -42.1 | 39.2 | -47.9 | 49.6 | -60.6 | 61.2 | -74.8 |
| | 5 | 500 | 16.2 | -18.1 | 17.7 | -19.8 | 19.3 | -21.5 | 22.7 | -25.2 | 26.3 | -29.3 | 30.2 | -33.6 | 34.3 | -38.2 | 43.5 | -48.4 | 53.7 | -59.8 |

**Note:** For effective areas between the those given above the load may be interpolated, otherwise use the load associated with the lower effective area.

14 Gage Corner Plate

| | | |
|---|---|---|
| Height= | 95.50 in | |
| Width= | 71.00 in | |
| Area= | 47. ft2 | Total Panel Area |
| Wall Corner Zone 5 Pressure Width= | 3.0 ft | Min Width Per ASCE Figure 30-5.1 |
| Wall Corner Zone 5 Pressure Height= | 8.0 ft | |
| Wall Corner Zone 5 Area= | 24. ft2 | |
| Wall Corner Zone 5 (-) Pressure= | -29.30 psf | Negative Pressure |
| Wall Corner Zone 5 (+) Pressure= | 22.50 psf | Positive Pressure |
| Wall Interior Zone 4 Area= | 23. ft2 | |
| Wall Interior Zone 4 (-) Pressure= | -24.56 psf | Negative Pressure |
| Wall Interior Zone 4 (+) Pressure= | 22.56 psf | Positive Pressure |

| | | | |
|---|---|---|---|
| client | Avantech | by SMV | sheet no. 48 |
| project | TSCR Demonstration Project | date 5/19 | |
| location | Hanford | checked | job no. |
| subject | Process Enclosure Wind Design | date | 39001 |

**Components and Cladding – Method 1** | **h ≤ 60 ft.**

**Figure 30.5-1 (cont'd)** | **Design Wind Pressures**

**Enclosed Buildings** | **Walls & Roofs**

**Net Design Wind Pressure, $p_{net30}$ (psf)** *(Exposure B at h = 30 ft.)*

| | Zone | Effective wind area (sf) | Basic Wind Speed V (mph) | | | | | | | | | | | | | | | | | |
|---|---|---|---|---|---|---|---|---|---|---|---|---|---|---|---|---|---|---|---|---|
| | | | 110 | | 115 | | 120 | | 130 | | 140 | | 150 | | 160 | | 180 | | 200 | |
| Roof 0 to 7 degrees | 1 | 10 | 8.9 | -21.8 | 9.7 | -23.8 | 10.5 | -25.9 | 12.4 | -30.4 | 14.3 | -35.3 | 16.5 | -40.5 | 18.7 | -46.1 | 23.7 | -58.3 | 29.3 | -72.0 |
| | 1 | 20 | 8.3 | -21.2 | 9.1 | -23.2 | 9.9 | -25.2 | 11.6 | -29.6 | 13.4 | -34.4 | 15.4 | -39.4 | 17.6 | -44.9 | 22.2 | -56.8 | 27.4 | -70.1 |
| | 1 | 50 | 7.6 | -20.5 | 8.3 | -22.4 | 9.0 | -24.4 | 10.6 | -28.6 | 12.3 | -33.2 | 14.1 | -38.1 | 16.0 | -43.3 | 20.3 | -54.8 | 25.0 | -67.7 |
| | 1 | 100 | 7.0 | -19.9 | 7.7 | -21.8 | 8.3 | -23.7 | 9.8 | -27.8 | 11.4 | -32.3 | 13.0 | -37.0 | 14.8 | -42.1 | 18.8 | -53.3 | 23.2 | -65.9 |
| | 2 | 10 | 8.9 | -36.5 | 9.7 | -39.9 | 10.5 | -43.5 | 12.4 | -51.0 | 14.3 | -59.2 | 16.5 | -67.9 | 18.7 | -77.3 | 23.7 | -97.8 | 29.3 | -120.7 |
| | 2 | 20 | 8.3 | -32.6 | 9.1 | -35.7 | 9.9 | -38.8 | 11.6 | -45.6 | 13.4 | -52.9 | 15.4 | -60.7 | 17.6 | -69.0 | 22.2 | -87.4 | 27.4 | -107.9 |
| | 2 | 50 | 7.6 | -27.5 | 8.3 | -30.1 | 9.0 | -32.7 | 10.6 | -38.4 | 12.3 | -44.5 | 14.1 | -51.1 | 16.0 | -58.2 | 20.3 | -73.6 | 25.0 | -90.9 |
| | 2 | 100 | 7.0 | -23.6 | 7.7 | -25.8 | 8.3 | -28.1 | 9.8 | -33.0 | 11.4 | -38.2 | 13.0 | -43.9 | 14.8 | -50.0 | 18.8 | -63.2 | 23.2 | -78.1 |
| | 3 | 10 | 8.9 | -55.0 | 9.7 | -60.1 | 10.5 | -65.4 | 12.4 | -76.8 | 14.3 | -89.0 | 16.5 | -102.2 | 18.7 | -116.3 | 23.7 | -147.2 | 29.3 | -181.7 |
| | 3 | 20 | 8.3 | -45.5 | 9.1 | -49.8 | 9.9 | -54.2 | 11.6 | -63.6 | 13.4 | -73.8 | 15.4 | -84.7 | 17.6 | -96.3 | 22.2 | -121.9 | 27.4 | -150.5 |
| | 3 | 50 | 7.6 | -33.1 | 8.3 | -36.1 | 9.0 | -39.3 | 10.6 | -46.2 | 12.3 | -53.5 | 14.1 | -61.5 | 16.0 | -69.9 | 20.3 | -88.5 | 25.0 | -109.3 |
| | 3 | 100 | 7.0 | -23.6 | 7.7 | -25.8 | 8.3 | -28.1 | 9.8 | -33.0 | 11.4 | -38.2 | 13.0 | -43.9 | 14.8 | -50.0 | 18.8 | -63.2 | 23.2 | -78.1 |
| Wall | 4 | 10 | 21.8 | -23.6 | 23.8 | -25.8 | 25.9 | -28.1 | 30.4 | -33.0 | 35.3 | -38.2 | 40.5 | -43.9 | 46.1 | -50.0 | 58.3 | -63.2 | 72.0 | -78.1 |
| | 4 | 20 | 20.8 | -22.6 | 22.7 | -24.7 | 24.7 | -26.9 | 29.0 | -31.6 | 33.7 | -36.7 | 38.7 | -42.1 | 44.0 | -47.9 | 55.7 | -60.6 | 68.7 | -74.8 |
| | 4 | 50 | 19.5 | -21.3 | 21.3 | -23.3 | 23.2 | -25.4 | 27.2 | -29.8 | 31.6 | -34.6 | 36.2 | -39.7 | 41.2 | -45.1 | 52.2 | -57.1 | 64.4 | -70.5 |
| | 4 | 100 | 18.5 | -20.4 | 20.2 | -22.2 | 22.0 | -24.2 | 25.9 | -28.4 | 30.0 | -33.0 | 34.4 | -37.8 | 39.2 | -43.1 | 49.6 | -54.5 | 61.2 | -67.3 |
| | 4 | 500 | 16.2 | -18.1 | 17.7 | -19.8 | 19.3 | -21.5 | 22.7 | -25.2 | 26.3 | -29.3 | 30.2 | -33.6 | 34.3 | -38.2 | 43.5 | -48.4 | 53.7 | -59.8 |
| | 5 | 10 | 21.8 | -29.1 | 23.8 | -31.9 | 25.9 | -34.7 | 30.4 | -40.7 | 35.3 | -47.2 | 40.5 | -54.2 | 46.1 | -61.7 | 58.3 | -78.0 | 72.0 | -96.3 |
| | 5 | 20 | 20.8 | -27.2 | 22.7 | -29.7 | 24.7 | -32.4 | 29.0 | -38.0 | 33.7 | -44.0 | 38.7 | -50.5 | 44.0 | -57.5 | 55.7 | -72.8 | 68.7 | -89.9 |
| | 5 | 50 | 19.5 | -24.6 | 21.3 | -26.9 | 23.2 | -29.3 | 27.2 | -34.3 | 31.6 | -39.8 | 36.2 | -45.7 | 41.2 | -52.0 | 52.2 | -65.8 | 64.4 | -81.3 |
| | 5 | 100 | 18.5 | -22.6 | 20.2 | -24.7 | 22.0 | -26.9 | 25.9 | -31.6 | 30.0 | -36.7 | 34.4 | -42.1 | 39.2 | -47.9 | 49.6 | -60.6 | 61.2 | -74.8 |
| | 5 | 500 | 16.2 | -18.1 | 17.7 | -19.8 | 19.3 | -21.5 | 22.7 | -25.2 | 26.3 | -29.3 | 30.2 | -33.6 | 34.3 | -38.2 | 43.5 | -48.4 | 53.7 | -59.8 |

**Note:** For effective areas between the those given above the load may be interpolated, otherwise use the load associated with the lower effective area.

14 Gage Corner Plate

| | | |
|---|---|---|
| Length= | 47.15 in | Roof Typical Panel Length |
| Width= | 29.24 in | Roof Typical Panel Width |
| Area= | 9.6. ft2 | Total Typical Panel Area |
| Roof Corner Zone 3 (-) Pressure= | -60.10 psf | |
| Roof Corner Zone 3 (+) Pressure= | 9.70 psf | |
| Roof End Zone 2 (-) Pressure= | -39.90 psf | |
| Roof End Zone 2 (+) Pressure= | 9.70 psf | |
| Roof Interior Zone 1 (-) Pressure= | -23.80 psf | |
| Roof Interior Zone 1 (+) Pressure= | 9.70 psf | |

| | | | |
|---|---|---|---|
| client | Avantech | by SMV | sheet no. 49 |
| project | TSCR Demonstration Project | date 5/19 | |
| location | Hanford | checked | job no. |
| subject | Process Enclosure Wind Component Design Pressures | date | 39001 |

$$p_{net} = \lambda K_{zt} p_{net30} \qquad (30.5\text{-}1)$$

where

$\lambda$ = adjustment factor for building height and exposure from Fig. 30.5-1

$K_{zt}$ = topographic factor as defined in Section 26.8 evaluated at 0.33 mean roof height, $0.33h$

$p_{net30}$ = net design wind pressure for Exposure B, at $h$ = 30 ft (9.1 m), from Fig. 30.5-1

$\lambda$= 1.21

$K_{ZT}$= 1.00 Flat, no hills or escarpments

**Adjustment Factor for Building Height and Exposure, $\lambda$**

| Mean roof height (ft) | Exposure B | Exposure C | Exposure D |
|---|---|---|---|
| 15 | 1.00 | 1.21 | 1.47 |
| 20 | 1.00 | 1.29 | 1.55 |
| 25 | 1.00 | 1.35 | 1.61 |
| 30 | 1.00 | 1.40 | 1.66 |
| 35 | 1.05 | 1.45 | 1.70 |
| 40 | 1.09 | 1.49 | 1.74 |
| 45 | 1.12 | 1.53 | 1.78 |
| 50 | 1.16 | 1.56 | 1.81 |
| 55 | 1.19 | 1.59 | 1.84 |
| 60 | 1.22 | 1.62 | 1.87 |

**Strength Level Design Pressures**

Wall Corner Zone 5 (-) Pressure= -35.45 psf
Wall Corner Zone 5 (+) Pressure= 27.23 psf
Wall Interior Zone 4 (-) Pressure= -29.72 psf
Wall Interior Zone 4 (+) Pressure= 27.30 psf
Roof Corner Zone 3 (-) Pressure= -72.72 psf
Roof Corner Zone 3 (+) Pressure= 11.74 psf
Roof End Zone 2 (-) Pressure= -48.28 psf
Roof End Zone 2 (+) Pressure= 11.74 psf
Roof Interior Zone 1 (-) Pressure= -28.80 psf
Roof Interior Zone 1 (+) Pressure= 11.74 psf

+ = towards surface

-- = away from surface

**ASD Level Design Pressures**

Wall Corner Zone 5 (-) Pressure= -21.27 psf
Wall Corner Zone 5 (+) Pressure= 16.34 psf
Wall Interior Zone 4 (-) Pressure= -17.83 psf
Wall Interior Zone 4 (+) Pressure= 16.38 psf
Roof Corner Zone 3 (-) Pressure= -43.63 psf
Roof Corner Zone 3 (+) Pressure= 7.04 psf
Roof End Zone 2 (-) Pressure= -28.97 psf
Roof End Zone 2 (+) Pressure= 7.04 psf
Roof Interior Zone 1 (-) Pressure= -17.28 psf
Roof Interior Zone 1 (+) Pressure= 7.04 psf

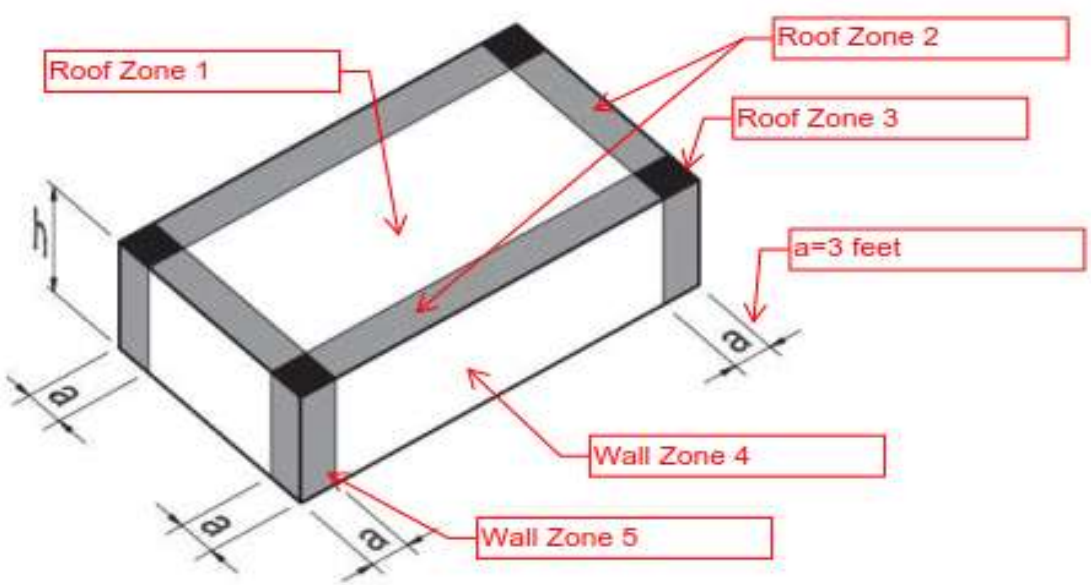


Flat Roof

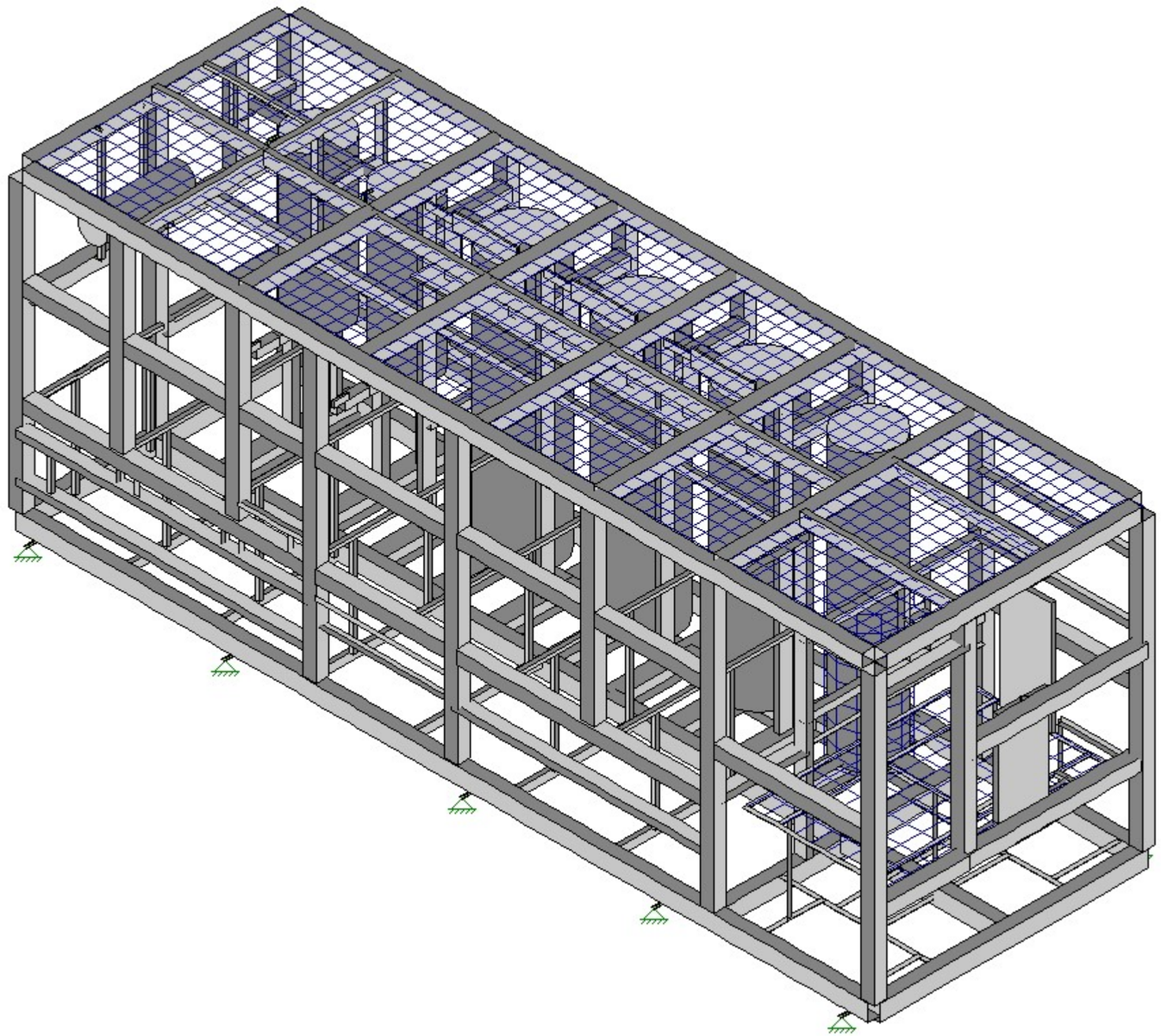

**TSCR PROCESS ENCLOSURE SKID – RISA 3D MODEL**

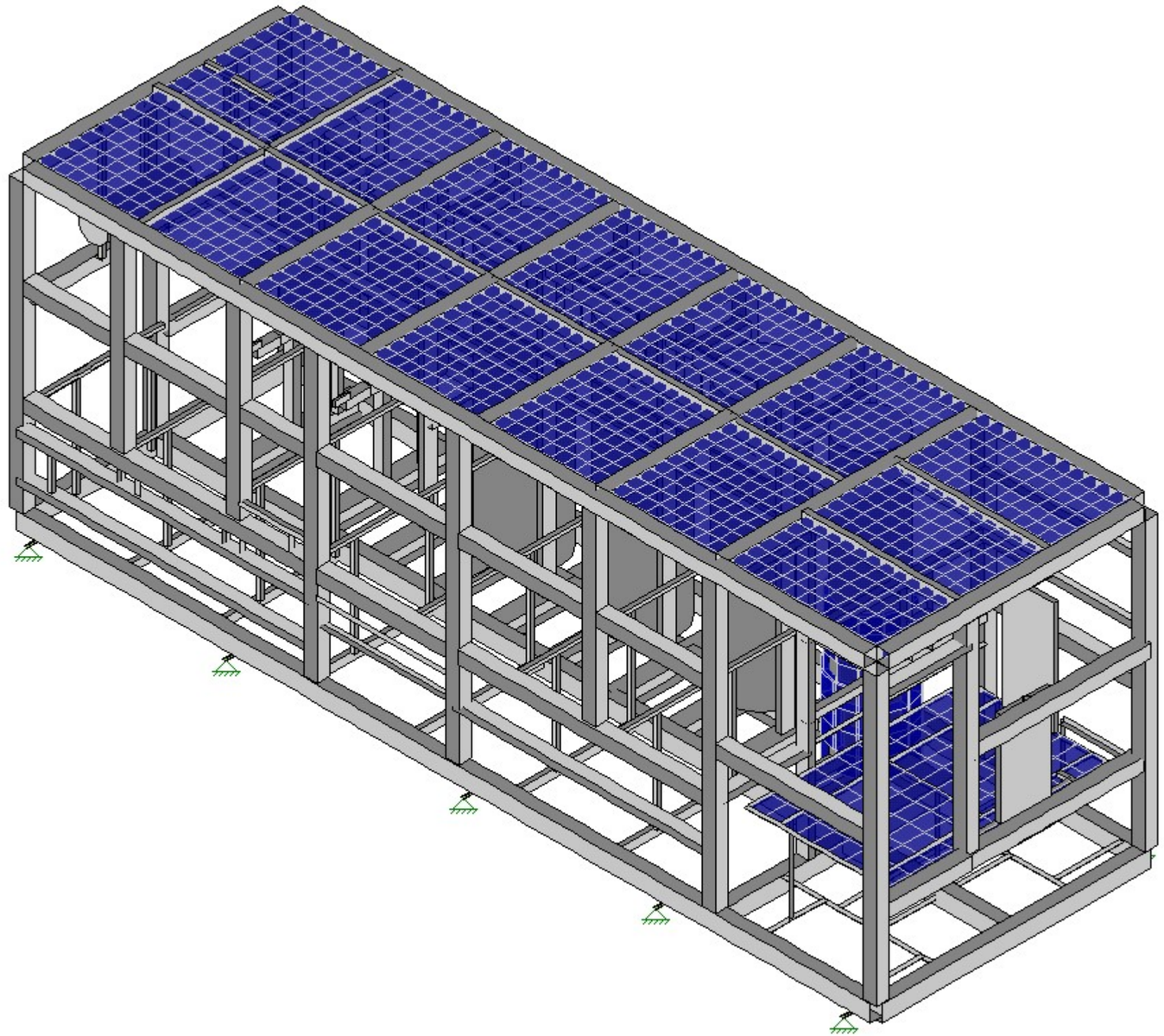

**TSCR PROCESS ENCLOSURE SKID – RISA 3D MODEL**

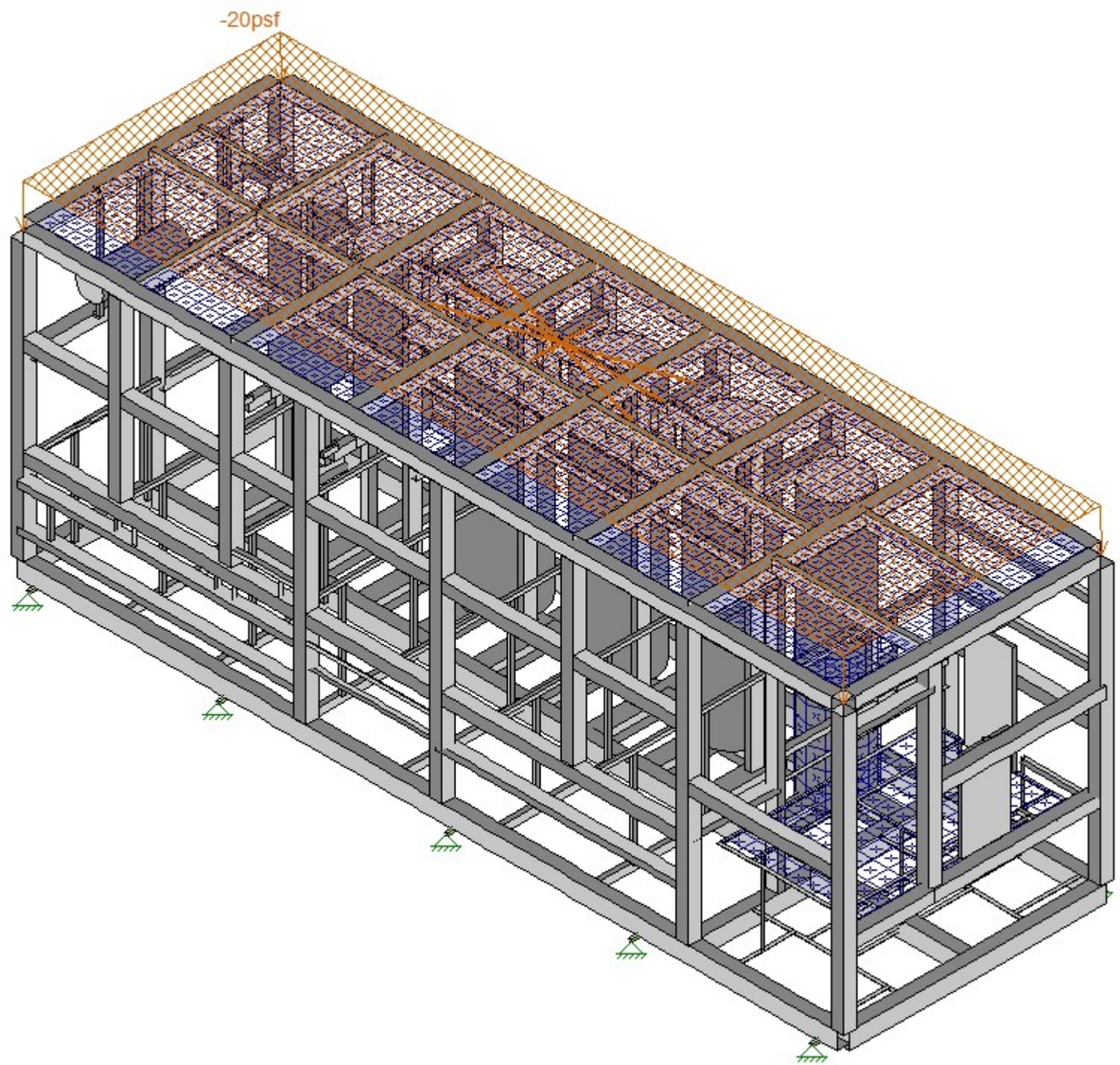


**TSCR PROCESS ENCLOSURE SKID – ROOF LIVE LOAD**

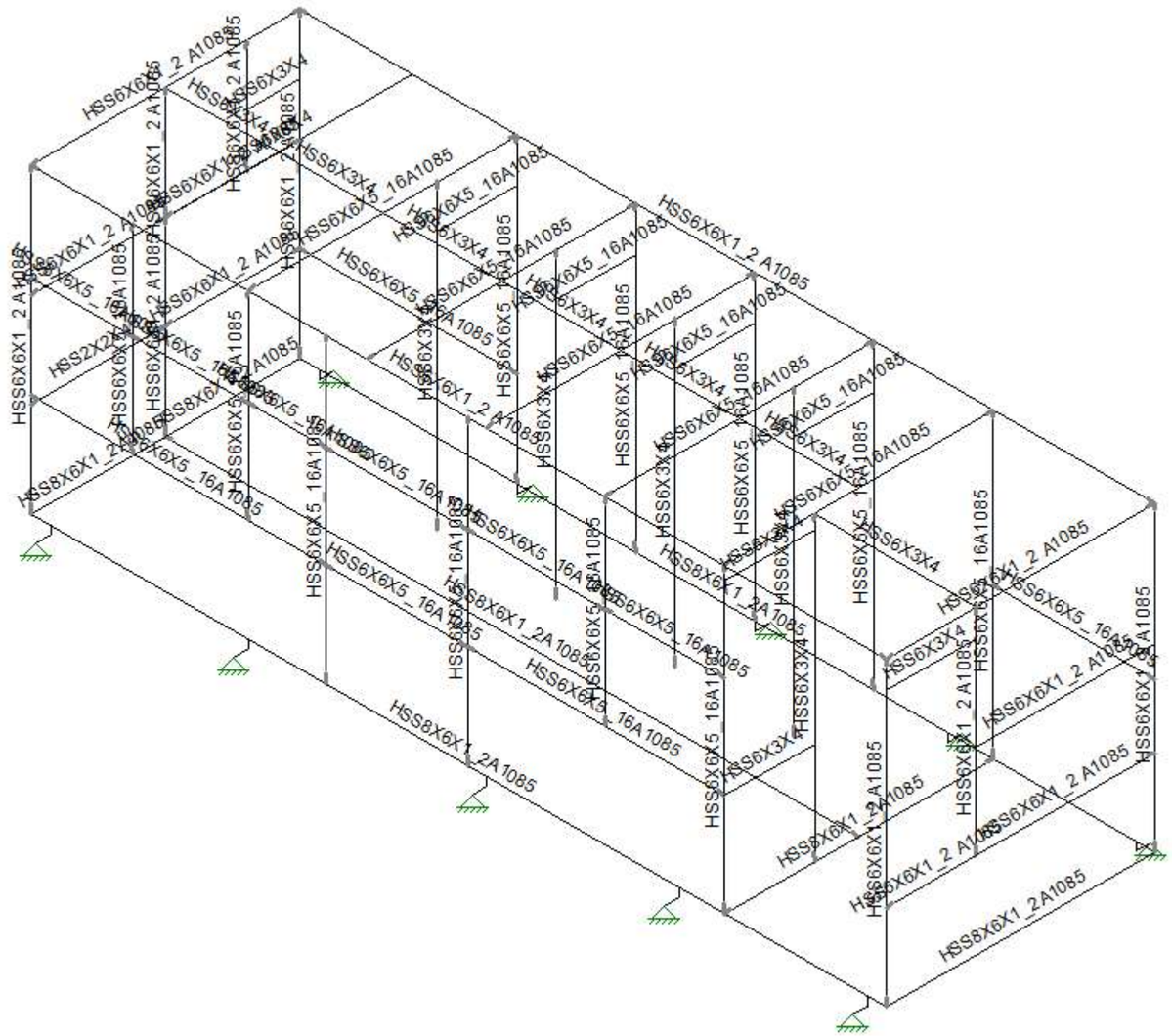


**TSCR PROCESS ENCLOSURE SKID – MAJOR FRAMING SIZES**

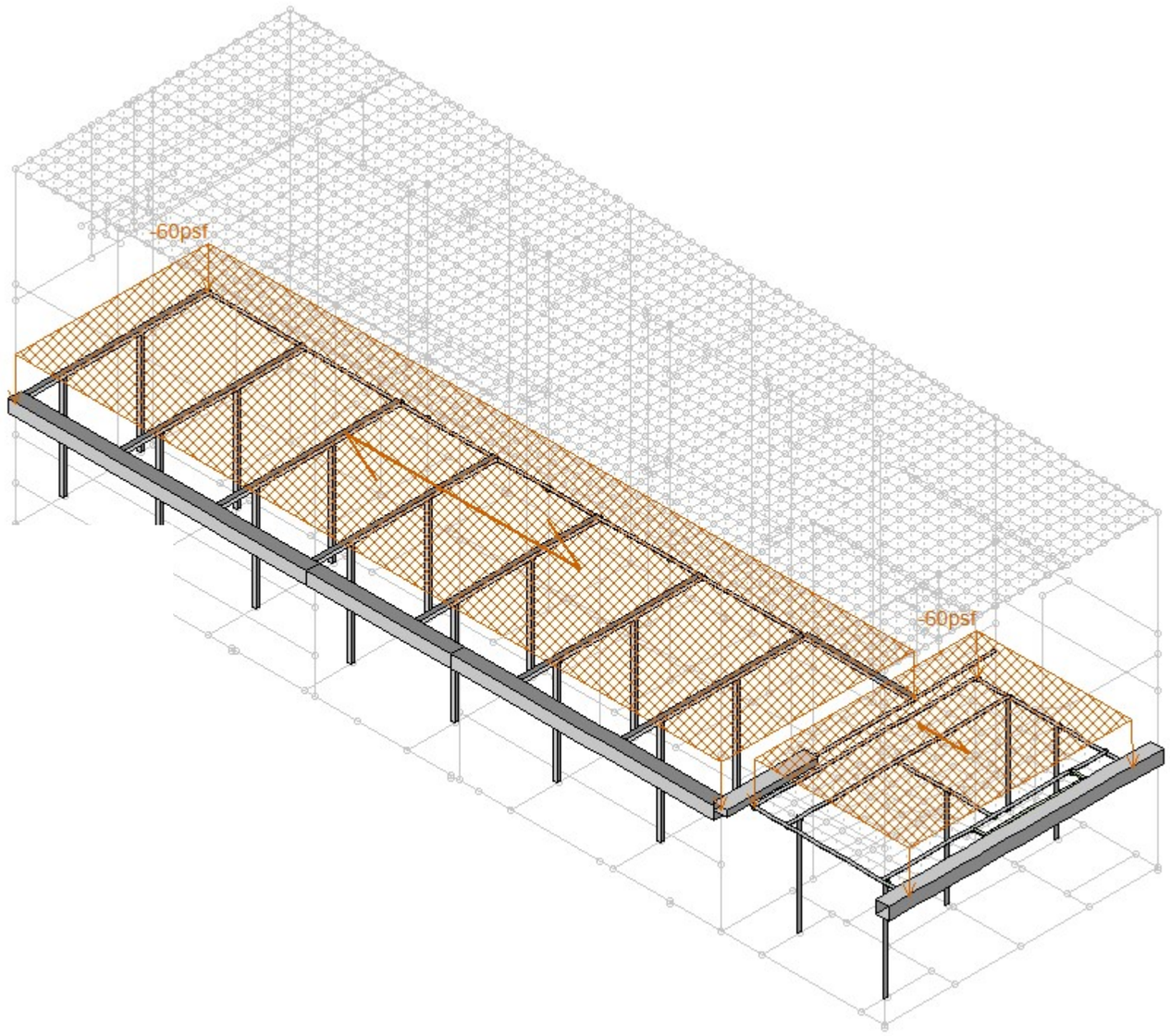


**TSCR PROCESS ENCLOSURE SKID – PLATFORM LEVEL LIVE LOADS**

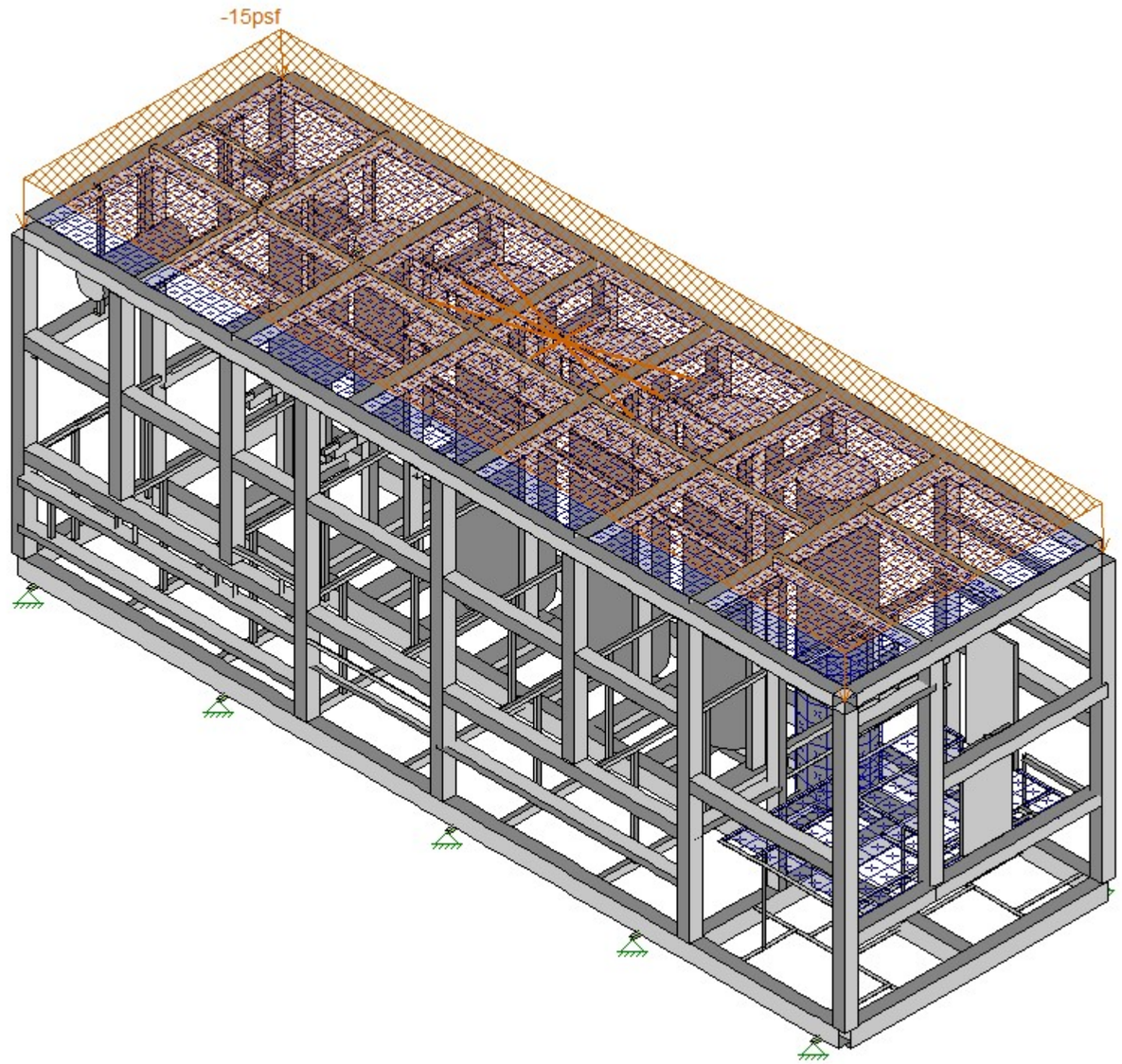


**TSCR PROCESS ENCLOSURE SKID – ROOF SNOW LOAD**

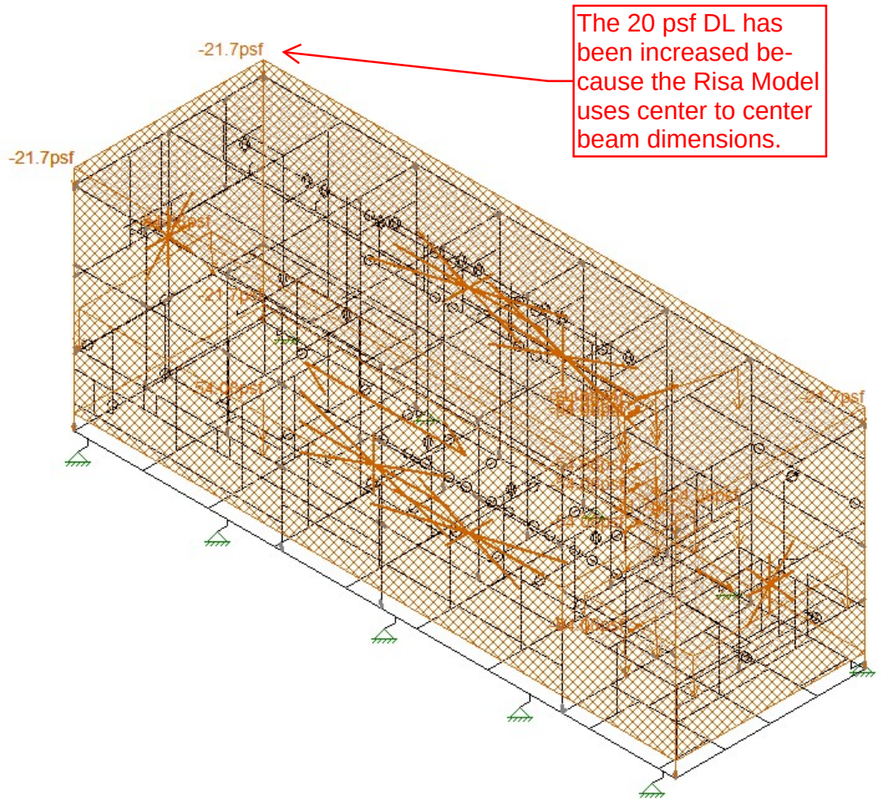


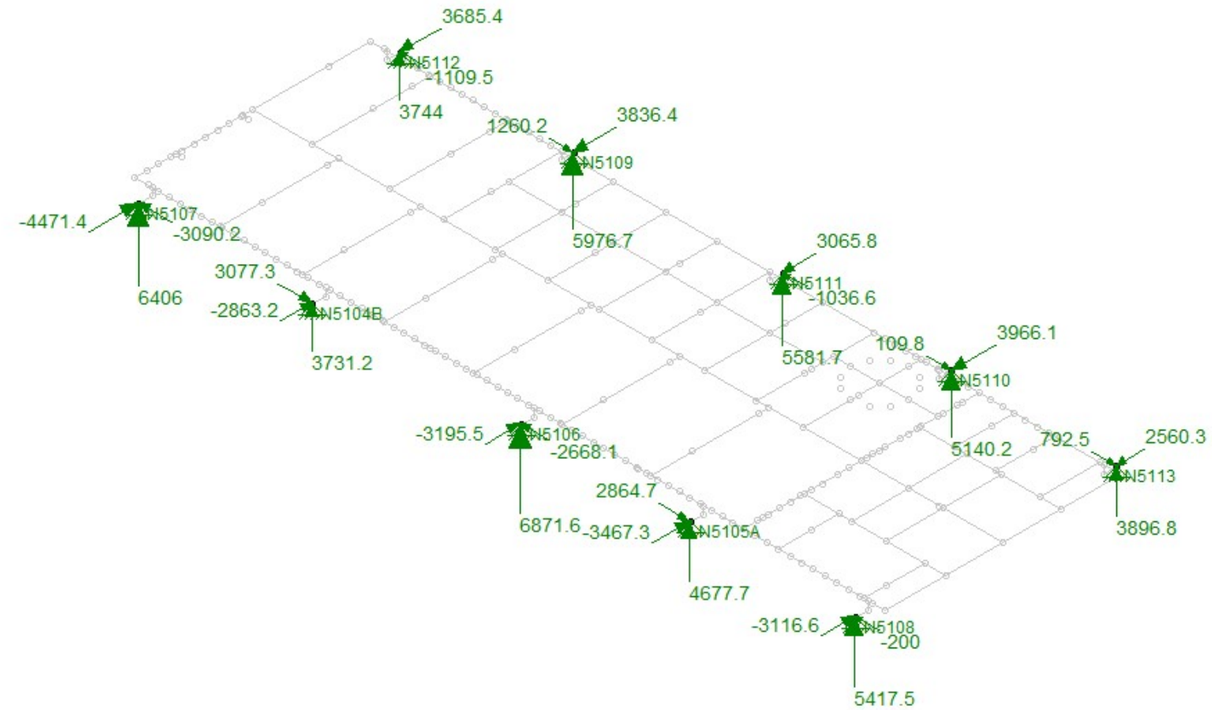


Joint Reactions (By Combination)

| | L... | Joint Label | X [lb] | Y [lb] | Z [lb] | MX [k-in] | MY [k-in] | MZ [k-in] |
|---|---|---|---|---|---|---|---|---|
| 1 | 3 | N5104B | 3077.292 | 3731.213 | -2863.221 | 0 | 0 | 0 |
| 2 | 3 | N5105A | 2864.722 | 4677.718 | -3467.289 | 0 | 0 | 0 |
| 3 | 3 | N5106 | -2668.096 | 6871.579 | -3195.543 | 0 | 0 | 0 |
| 4 | 3 | N5107 | -3090.243 | 6405.969 | -4471.415 | 0 | 0 | 0 |
| 5 | 3 | N5108 | -200.029 | 5417.534 | -3116.609 | 0 | 0 | 0 |
| 6 | 3 | N5109 | 1260.154 | 5976.739 | 3836.412 | 0 | 0 | 0 |
| 7 | 3 | N5110 | 109.81 | 5140.214 | 3966.079 | 0 | 0 | 0 |
| 8 | 3 | N5111 | -1036.628 | 5581.739 | 3065.82 | 0 | 0 | 0 |
| 9 | 3 | N5112 | -1109.48 | 3743.961 | 3685.421 | 0 | 0 | 0 |
| 10 | 3 | N5113 | 792.498 | 3896.791 | 2560.343 | 0 | 0 | 0 |
| 11 | 3 | Totals: | 0 | 51443.456 | -.003 | | | |
| 12 | 3 | COG (in): | X: 202.095 | Y: 64.532 | Z: 66.924 | | | |

**TSCR PROCESS ENCLOSURE – BUILDING DEAD LOAD**

Four Different Wind Cases for the X Direction:

1. Wind +X, Positive Internal Pressure.
2. Wind +X, Negative Internal Pressure
3. Wind -X, Positive Internal Pressure
4.) Wind -X, Negative Internal Pressure

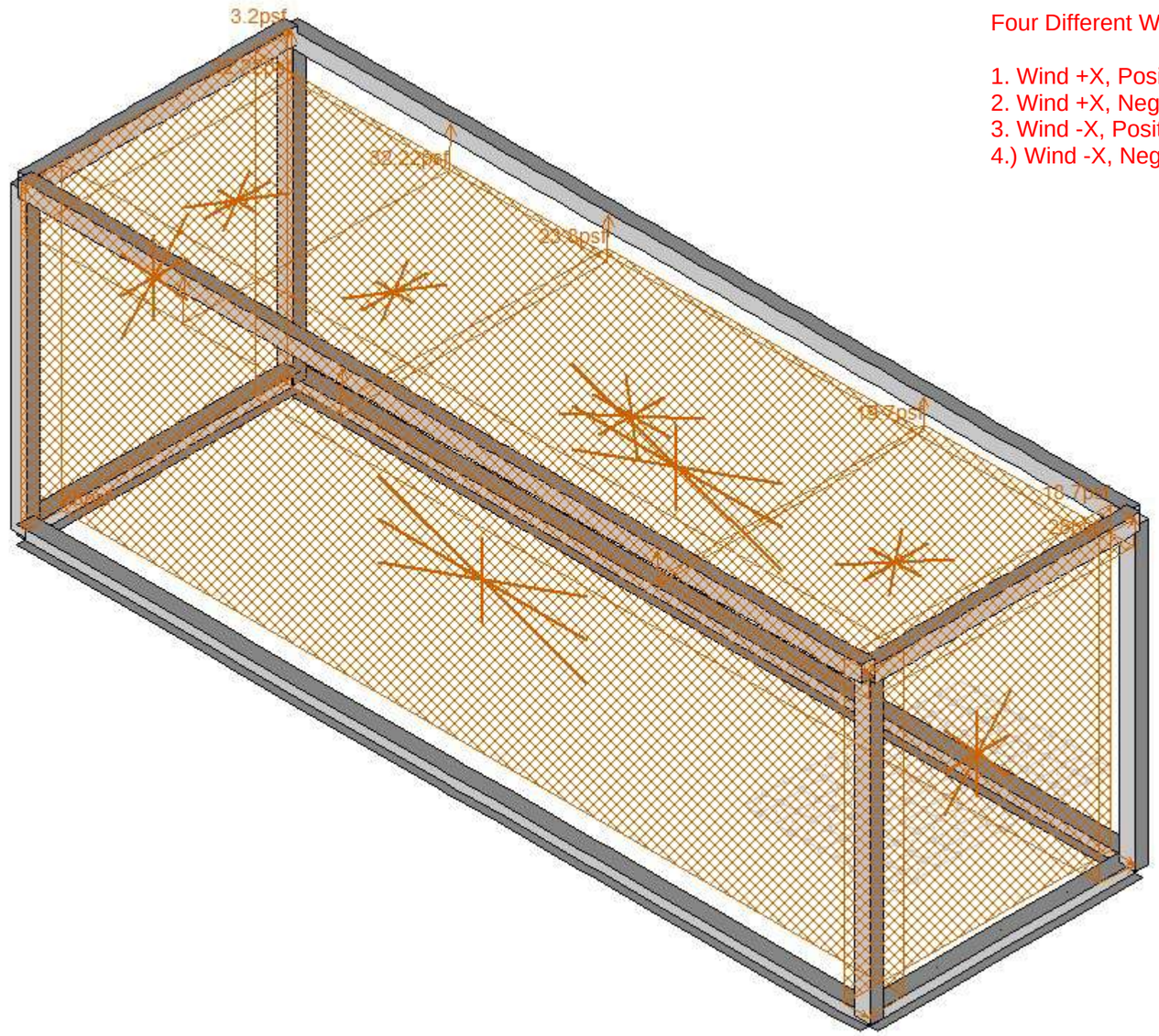


**TSCR PROCESS ENCLOSURE SKID – WIND LOAD + X DIRN, POS INTERNAL PRESSURE**

Four Different Wind Cases for the Z Direction:

1. Wind +Z, Positive Internal Pressure.
2. Wind +Z, Negative Internal Pressure
3. Wind -Z, Positive Internal Pressure
4.) Wind -Z, Negative Internal Pressure

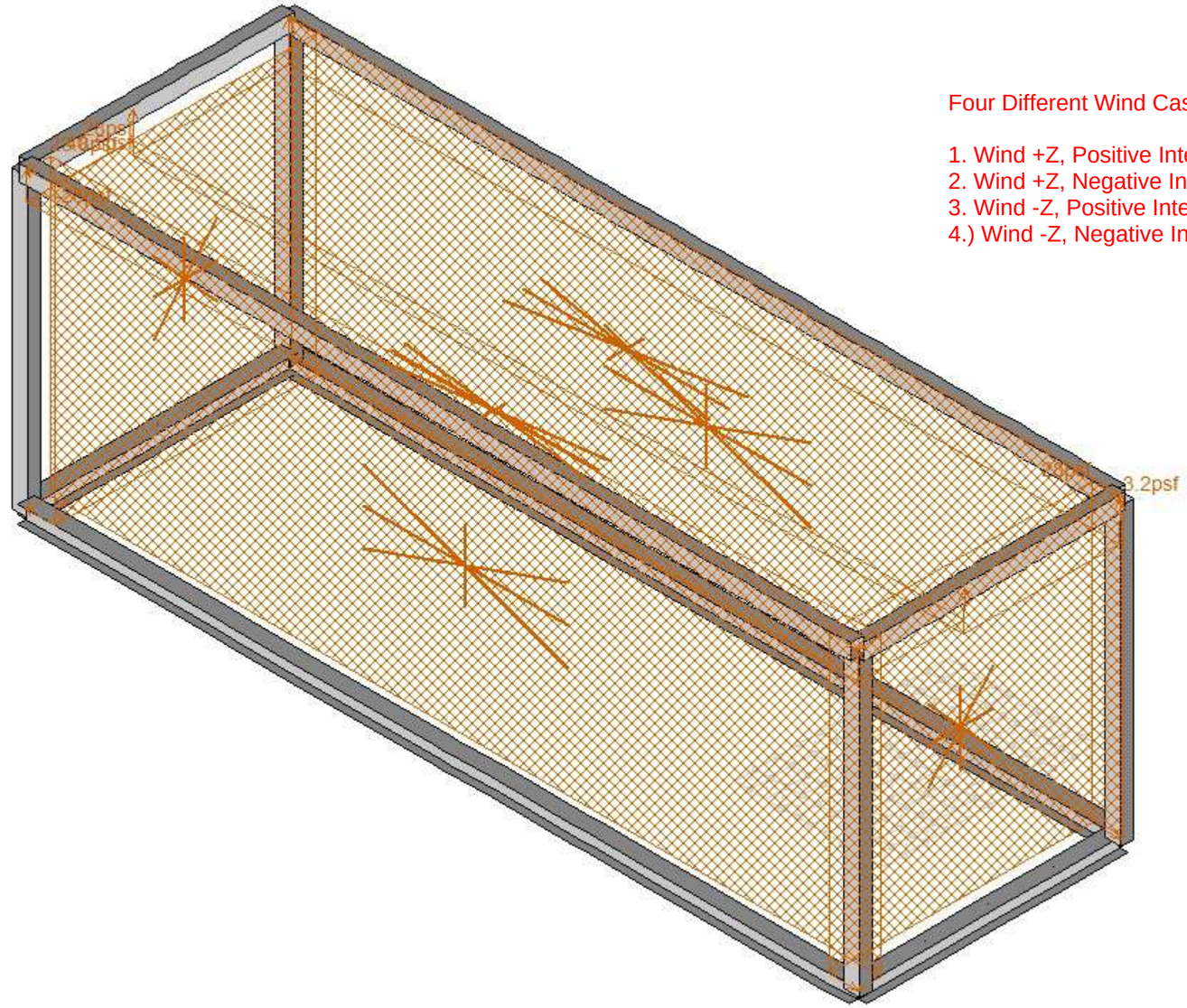


**TSCR PROCESS ENCLOSURE SKID – WIND LOAD +Z DIRN, POS INTERNAL PRESSURE**

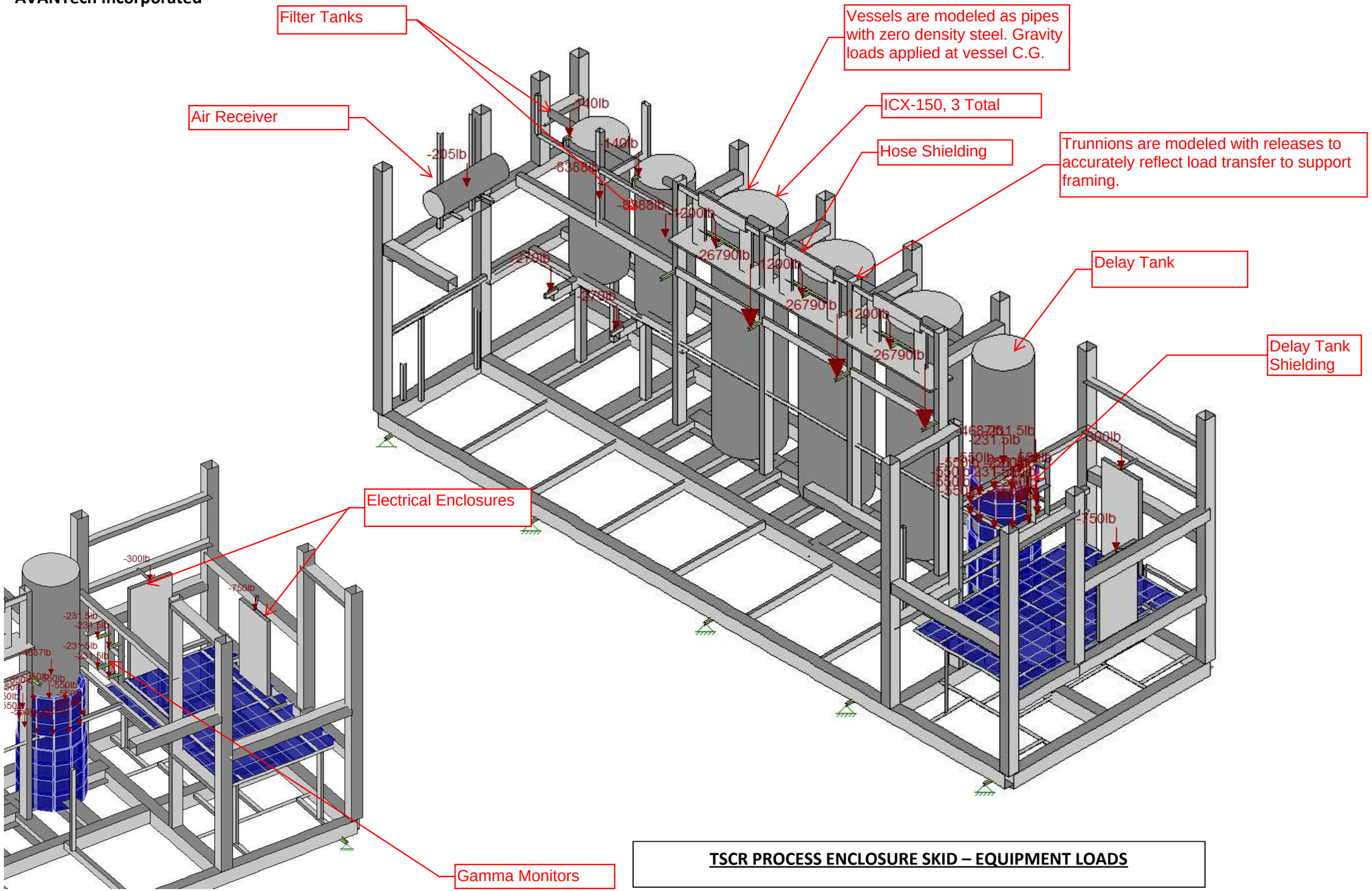


**TSCR PROCESS ENCLOSURE SKID – EQUIPMENT LOADS**

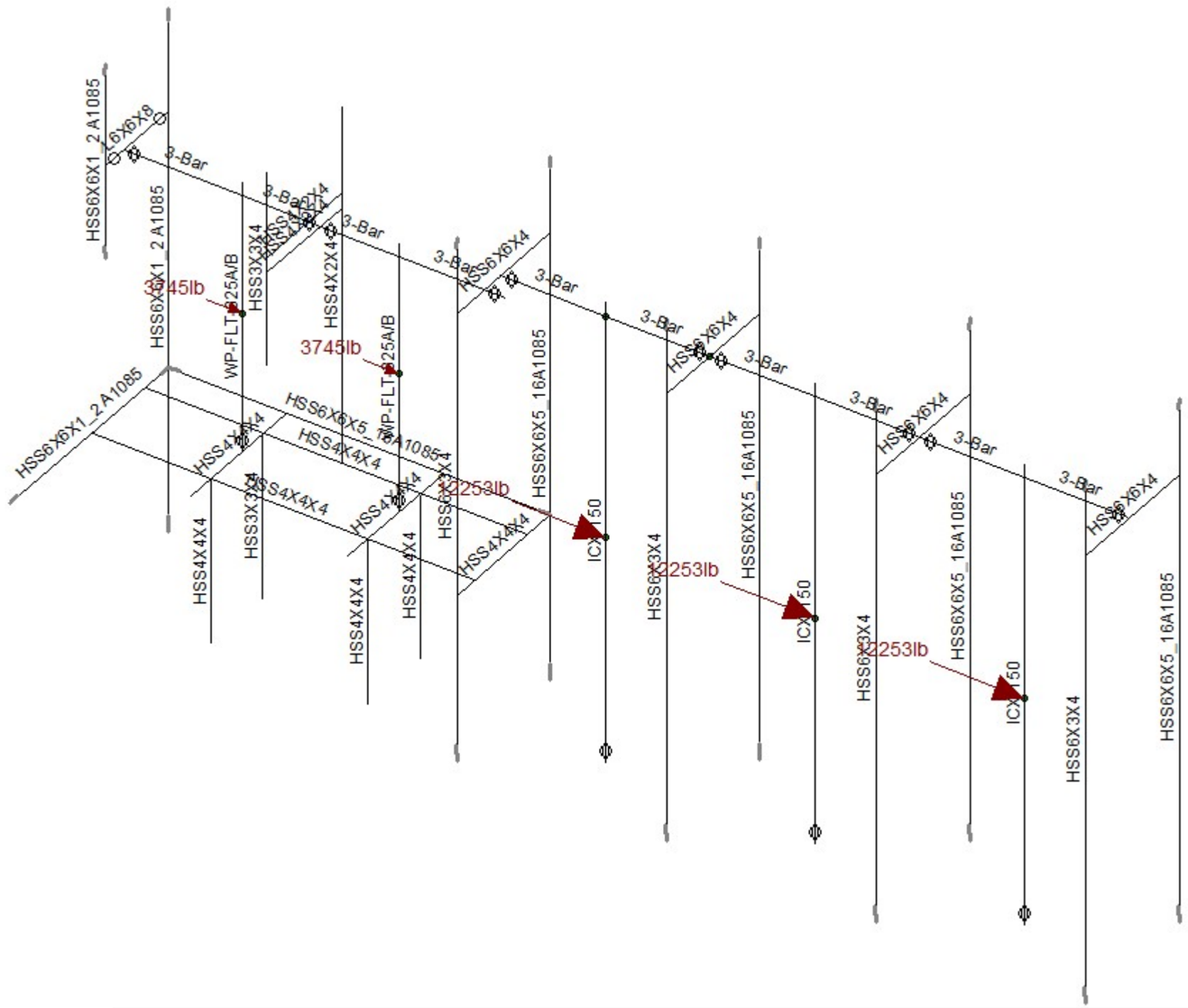


**TSCR PROCESS ENCLOSURE SKID – VESSEL SUPPORT FRAMING**

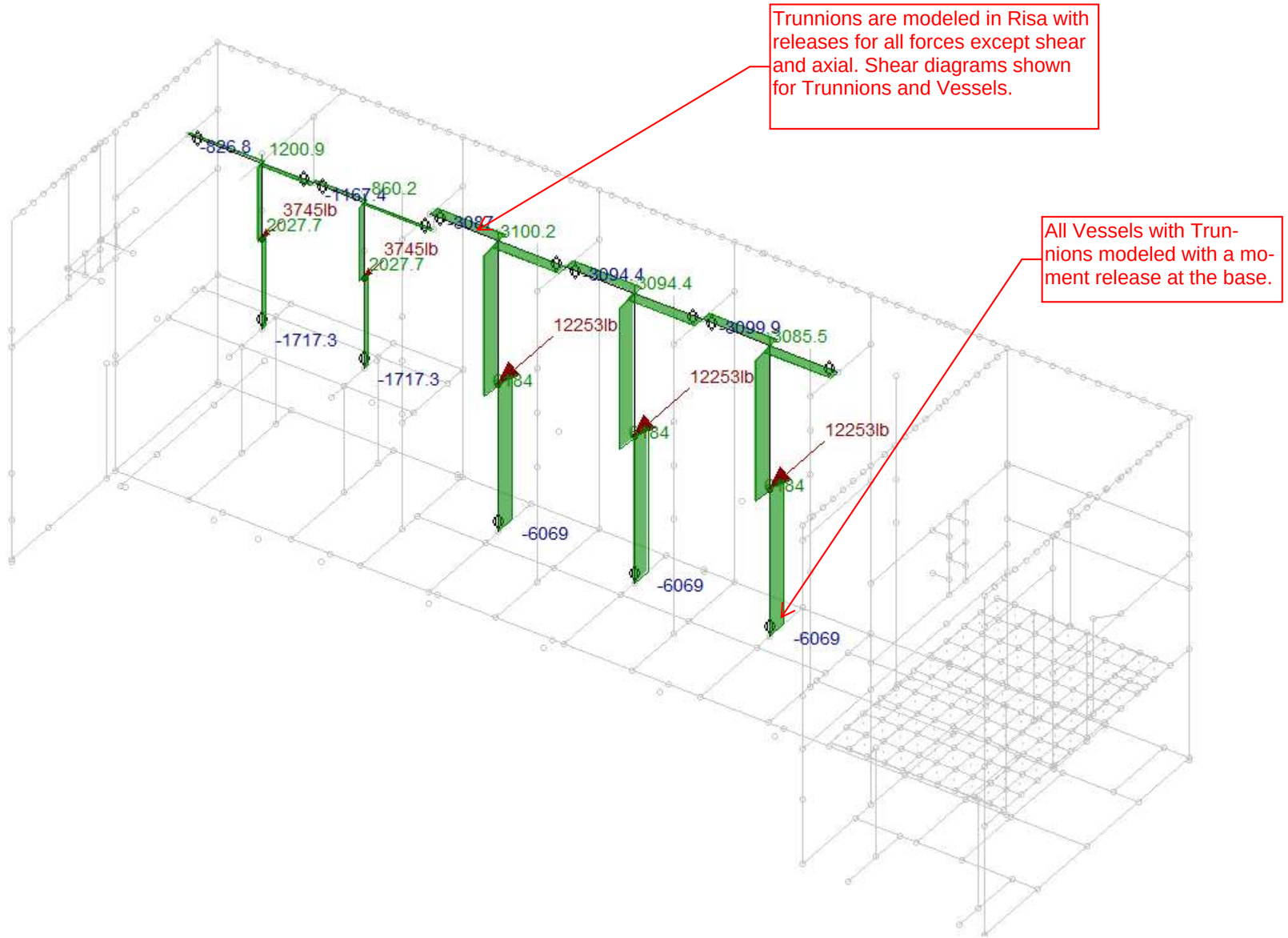


**TSCR PROCESS ENCLOSURE SKID – SEISMIC +Z DIRECTION FORCES FROM VESSELS TO TRUNNIONS**

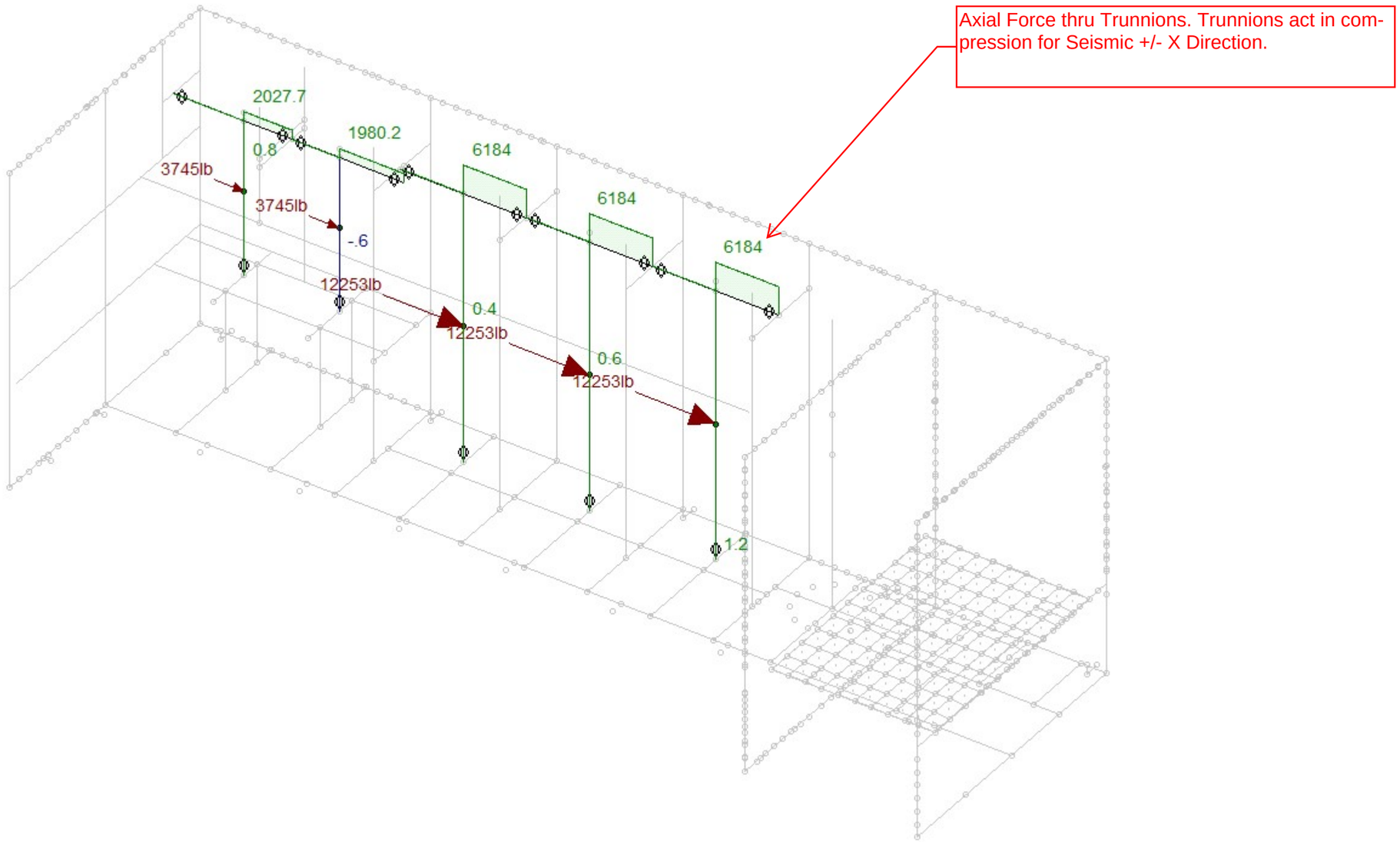


**TSCR PROCESS ENCLOSURE SKID – SEISMIC +X DIRECTION FORCES FROM VESSELS TO TRUNNIONS**

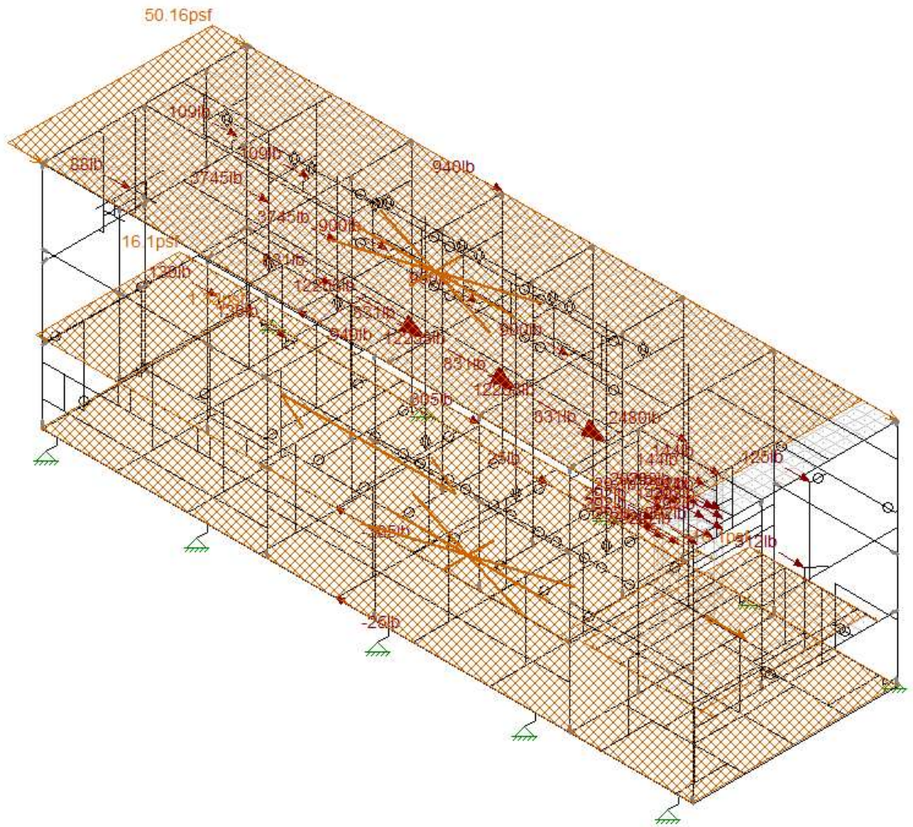


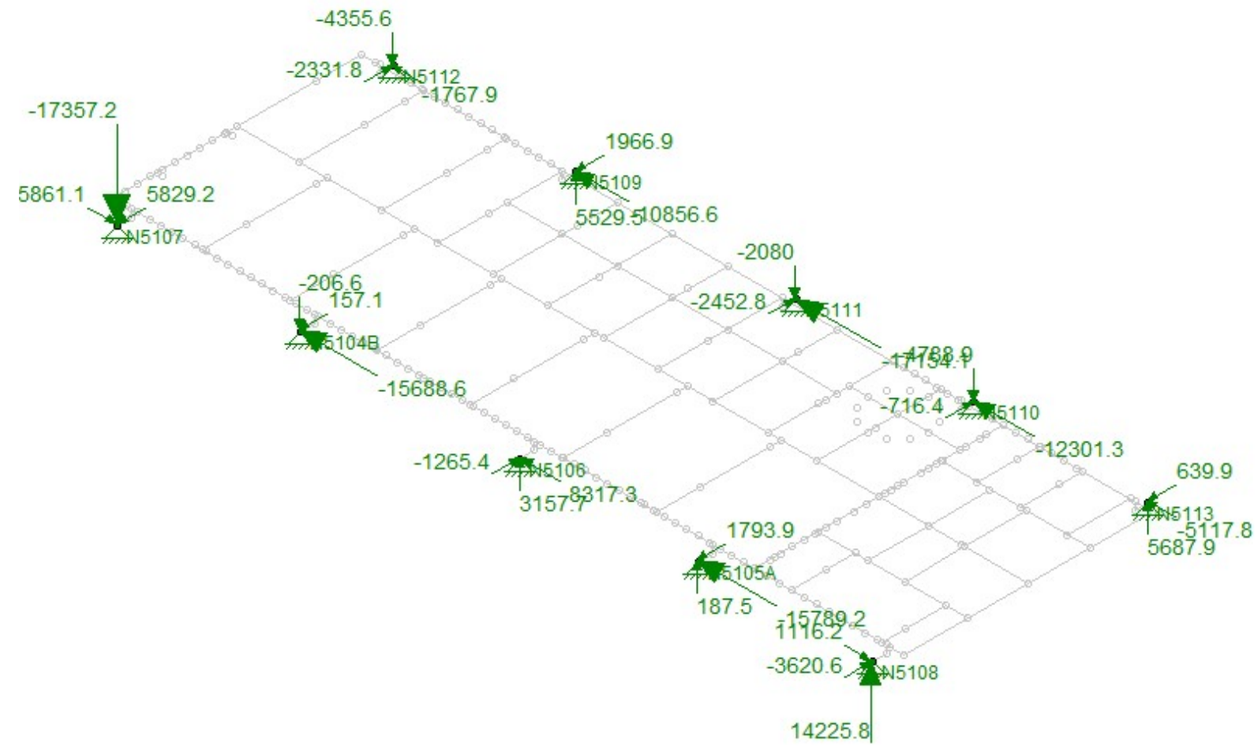


Joint Reactions (By Combination)

| | L... | Joint Label | X [lb] | Y [lb] | Z [lb] | MX [k-in] | MY [k-in] | MZ [k-in] |
|---|---|---|---|---|---|---|---|---|
| 1 | 7 | N5104B | -15688.58 | -206.603 | 157.137 | 0 | 0 | 0 |
| 2 | 7 | N5105A | -15789.15 | 187.472 | 1793.866 | 0 | 0 | 0 |
| 3 | 7 | N5106 | -8317.304 | 3157.742 | -1265.449 | 0 | 0 | 0 |
| 4 | 7 | N5107 | 5861.141 | -17357.245 | 5829.233 | 0 | 0 | 0 |
| 5 | 7 | N5108 | 1116.205 | 14225.752 | -3620.611 | 0 | 0 | 0 |
| 6 | 7 | N5109 | -10856.55 | 5529.526 | 1966.937 | 0 | 0 | 0 |
| 7 | 7 | N5110 | -12301.25 | -4788.886 | -716.442 | 0 | 0 | 0 |
| 8 | 7 | N5111 | -17154.11 | -2079.994 | -2452.764 | 0 | 0 | 0 |
| 9 | 7 | N5112 | -1767.927 | -4355.629 | -2331.832 | 0 | 0 | 0 |
| 10 | 7 | N5113 | -5117.758 | 5687.864 | 639.918 | 0 | 0 | 0 |
| 11 | 7 | Totals: | -80015.30 | -.002 | -.007 | | | |
| 12 | 7 | COG (in): | NC | NC | NC | | | |

**TSCR PROCESS ENCLOSURE SKID – BUILDING & EQUIPMENT SEISMIC LOAD +X DIRECTION**

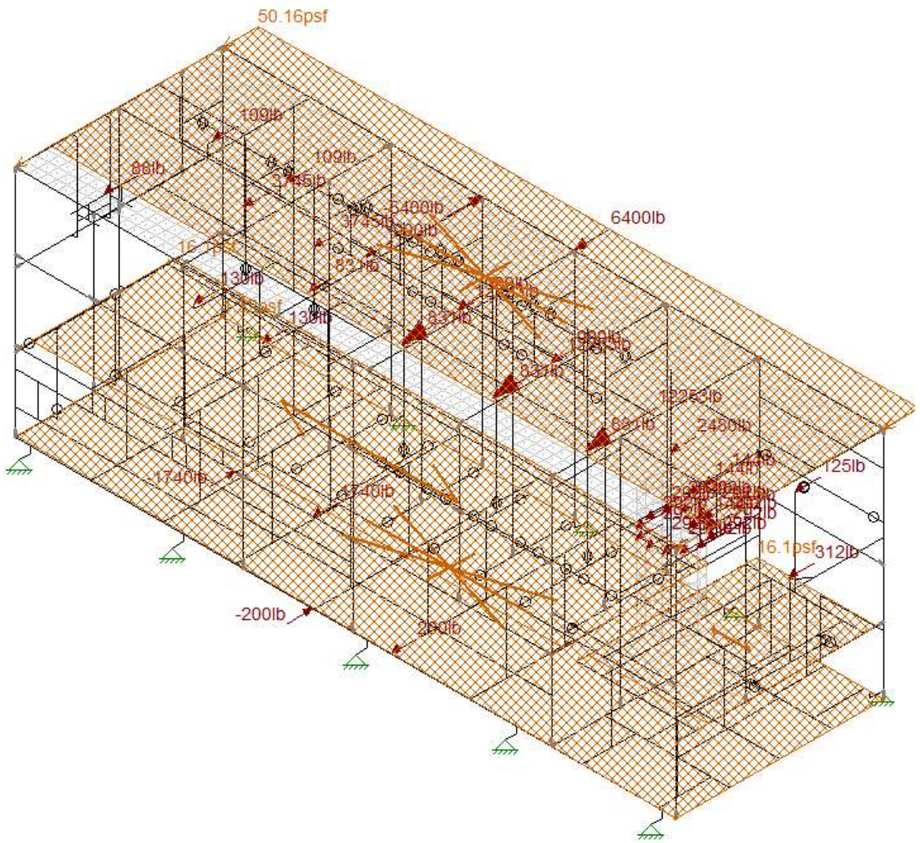


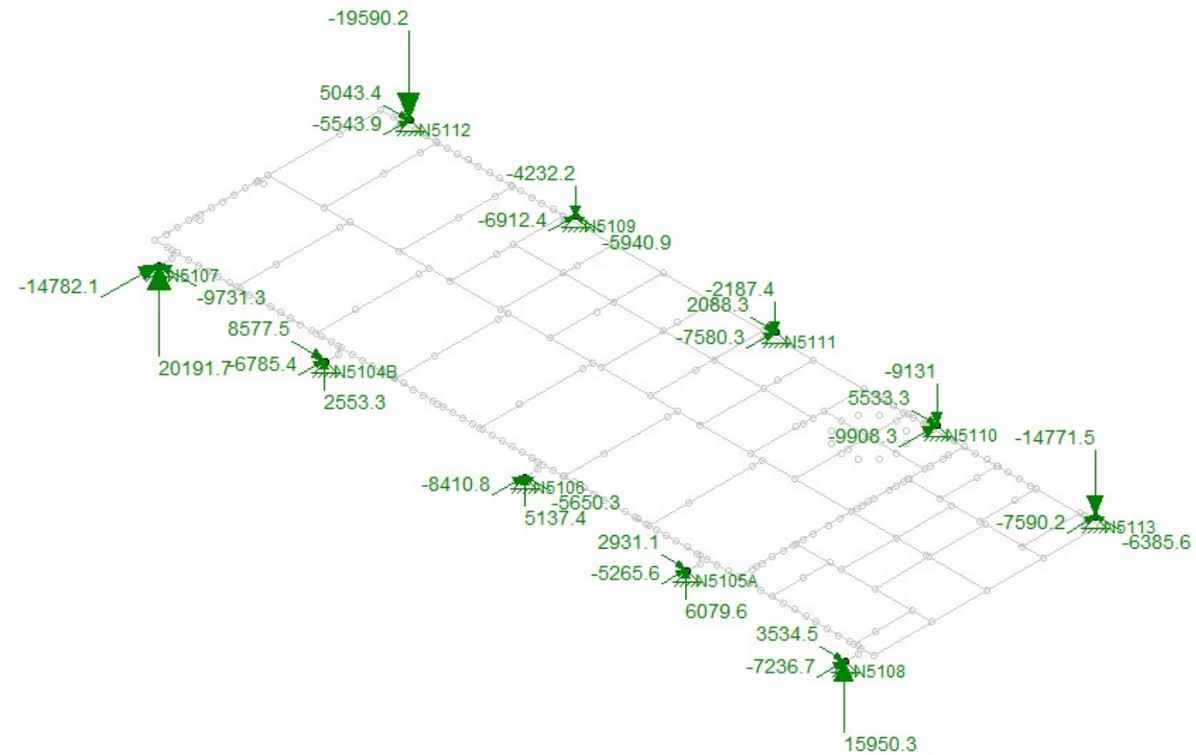


Joint Reactions (By Combination)

| | L... | Joint Label | X [lb] | Y [lb] | Z [lb] | MX [k-in] | MY [k-in] | MZ [k-in] |
|---|---|---|---|---|---|---|---|---|
| 1 | 8 | N5104B | 8577.497 | 2553.266 | -6785.389 | 0 | 0 | 0 |
| 2 | 8 | N5105A | 2931.149 | 6079.585 | -5265.607 | 0 | 0 | 0 |
| 3 | 8 | N5106 | -5650.309 | 5137.384 | -8410.787 | 0 | 0 | 0 |
| 4 | 8 | N5107 | -9731.3 | 20191.704 | -14782.07 | 0 | 0 | 0 |
| 5 | 8 | N5108 | 3534.53 | 15950.303 | -7236.65 | 0 | 0 | 0 |
| 6 | 8 | N5109 | -5940.936 | -4232.185 | -6912.4 | 0 | 0 | 0 |
| 7 | 8 | N5110 | 5533.341 | -9130.952 | -9908.27 | 0 | 0 | 0 |
| 8 | 8 | N5111 | 2088.302 | -2187.363 | -7580.258 | 0 | 0 | 0 |
| 9 | 8 | N5112 | 5043.352 | -19590.223 | -5543.887 | 0 | 0 | 0 |
| 10 | 8 | N5113 | -6385.628 | -14771.521 | -7590.155 | 0 | 0 | 0 |
| 11 | 8 | Totals: | -.001 | -.002 | -80015.47 | | | |
| 12 | 8 | COG (in): | NC | NC | NC | | | |

**TSCR PROCESS ENCLOSURE SKID – BUILDING & EQUIPMENT SEISMIC LOAD +Z DIRECTION**

## Basic Load Cases

| | BLC Description | Category | X Gravity | Y Gravity | Z Gravity | Joint | Point | Distributed | Area(Member) | Surface(Plate/... |
|---|---|---|---|---|---|---|---|---|---|---|
| 1 | Framing Selfweight | DL | | | | | | | | |
| 2 | Building Applied Dead Load | DL | | | | | | | 17 | |
| 3 | Equipment Loads | DL | | | | 32 | | | | |
| 4 | Piping Loads | DL | | | | | | 8 | | |
| 5 | Live Load | LL | | | | | | | 2 | |
| 6 | BLC 2 Transient Area Loads | None | | | | | | 724 | | |
| 7 | Roof Live Load | RLL | | | | | | | 1 | |
| 8 | Snow Load | SL | | | | | | | 1 | |
| 9 | Live Load | LL | | | | | | | | |
| 10 | Earthquake +X | ELX | | | | 42 | | | 4 | |
| 11 | Earthquake +Z | ELZ | | | | 42 | | | 4 | |
| 12 | Wind +X, Pos | None | | | | | | | 8 | |
| 13 | Wind -X, Pos | None | | | | | | | 8 | |
| 14 | Wind +Z, Pos | None | | | | | | | 6 | |
| 15 | Wind -Z, Pos | None | | | | | | | 6 | |
| 16 | Wind+X, Neg | None | | | | | | | 8 | |
| 17 | Wind -X, Neg | None | | | | | | | 8 | |
| 18 | Wind +Z, Neg | None | | | | | | | 6 | |
| 19 | Wind -Z, Neg | None | | | | | | | 6 | |
| 20 | BLC 5 Transient Area Loads | None | | | | | | 66 | | |
| 22 | BLC 7 Transient Area Loads | None | | | | | | 120 | | |
| 23 | BLC 8 Transient Area Loads | None | | | | | | 120 | | |
| 24 | | None | | | | | | 507 | | |
| 25 | BLC 10 Transient Area Loads | None | | | | | | 413 | | |
| 26 | BLC 11 Transient Area Loads | None | | | | | | 413 | | |
| 27 | BLC 12 Transient Area Loads | None | | | | | | 515 | | |
| 28 | BLC 14 Transient Area Loads | None | | | | | | 529 | | |
| 29 | BLC 13 Transient Area Loads | None | | | | | | 498 | | |
| 30 | BLC 15 Transient Area Loads | None | | | | | | 522 | | |
| 31 | BLC 16 Transient Area Loads | None | | | | | | 515 | | |
| 32 | BLC 18 Transient Area Loads | None | | | | | | 529 | | |
| 33 | BLC 17 Transient Area Loads | None | | | | | | 498 | | |
| 34 | BLC 19 Transient Area Loads | None | | | | | | 522 | | |

## Load Combinations

| | Description | Solve | PD... | SR... | BLC | Factor | BLC | Factor | BLC | Factor | BLC | Factor | BLC | Factor | BLC | Factor | BLC | Factor | BLC | Factor | BLC | Factor | BLC | Factor |
|---|---|---|---|---|---|---|---|---|---|---|---|---|---|---|---|---|---|---|---|---|---|---|---|---|
| 1 | Selfweight | | Y | | 1 | 1 | | | | | | | | | | | | | | | | | | |
| 2 | Building, Equipment, & Piping Dead Load | | Y | | DL | 1 | | | | | | | | | | | | | | | | | | |
| 3 | Building Only Dead Load | | Y | | 2 | 1 | | | | | | | | | | | | | | | | | | |
| 4 | Not Used | | Y | | 4 | 1 | | | | | | | | | | | | | | | | | | |
| 5 | Total Equipment Deadload | | Y | | 2 | 1 | | | | | | | | | | | | | | | | | | |
| 6 | Live Load | | Y | | LL | 1 | | | | | | | | | | | | | | | | | | |
| 7 | Earthquake +X | | Y | | ELX | 1 | | | | | | | | | | | | | | | | | | |
| 8 | Earthquake +Z | | Y | | ELZ | 1 | | | | | | | | | | | | | | | | | | |
| 9 | Wind +X, Pos | | Y | | 12 | 1 | | | | | | | | | | | | | | | | | | |
| 10 | Wind -X, Pos | | Y | | 13 | 1 | | | | | | | | | | | | | | | | | | |
| 11 | Wind +Z, Pos | | Y | | 14 | 1 | | | | | | | | | | | | | | | | | | |
| 12 | Wind -Z, Pos | | Y | | 15 | 1 | | | | | | | | | | | | | | | | | | |
| 13 | Wind +X, Neg | | Y | | 16 | 1 | | | | | | | | | | | | | | | | | | |
| 14 | Wind +X, Neg | | Y | | 17 | 1 | | | | | | | | | | | | | | | | | | |
| 15 | Wind +Z, Neg | | Y | | 18 | 1 | | | | | | | | | | | | | | | | | | |
| 16 | Wind -Z, Neg | | Y | | 19 | 1 | | | | | | | | | | | | | | | | | | |
| 17 | Selfweight + Equipment Dead Load | | Y | | 1 | 1 | 2 | 1 | | | | | | | | | | | | | | | | |
| 18 | Natural Frequency Runs | | Y | | DL | 1 | | | | | | | | | | | | | | | | | | |
| 19 | | | Y | | 3 | 1 | | | | | | | | | | | | | | | | | | |
| 20 | Test Load | | Y | | 21 | 1 | | | | | | | | | | | | | | | | | | |
| 21 | | | | | | | | | | | | | | | | | | | | | | | | |
| 22 | | | | | | | | | | | | | | | | | | | | | | | | |
| 23 | Gravity Strength Combinations | | | | | | | | | | | | | | | | | | | | | | | |
| 24 | ASCE Strength 1 | Yes | Y | | DL | 1.4 | | | | | | | | | | | | | | | | | | |
| 25 | ASCE Strength 2 (a) | Yes | Y | | DL | 1.2 | LL | 1.6 | LLS | 1.6 | RLL | .5 | | | | | | | | | | | | |
| 26 | ASCE Strength 2 (b) | Yes | Y | | DL | 1.2 | LL | 1.6 | LLS | 1.6 | SL | .5 | SLN | .5 | | | | | | | | | | |
| 27 | ASCE Strength 2 (c) | Yes | Y | | DL | 1.2 | LL | 1.6 | LLS | 1.6 | | | | | | | | | | | | | | |
| 28 | ASCE Strength 3 (a) | Yes | Y | | DL | 1.2 | RLL | 1.6 | LL | .5 | LLS | 1 | | | | | | | | | | | | |
| 29 | ASCE Strength 3 (c) | Yes | Y | | DL | 1.2 | SL | 1.6 | SLN | 1.6 | LL | .5 | LLS | 1 | | | | | | | | | | |
| 30 | | | | | | | | | | | | | | | | | | | | | | | | |
| 31 | Seismic Strength Combinations | | | | | | | | | | | | | | | | | | | | | | | |
| 32 | ASCE Strength 5 (a) | Yes | Y | | DL | 1.2 | Sds*DL | .2 | Rho*ELX | 1 | LL | .5 | LLS | 1 | SL | .2 | SLN | .2 | | | | | | |
| 33 | ASCE Strength 5 (b) | Yes | Y | | DL | 1.2 | Sds*DL | .2 | Rho*ELZ | 1 | LL | .5 | LLS | 1 | SL | .2 | SLN | .2 | | | | | | |
| 34 | ASCE Strength 5 (c) | Yes | Y | | DL | 1.2 | Sds*DL | .2 | Rho*ELX | -1 | LL | .5 | LLS | 1 | SL | .2 | SLN | .2 | | | | | | |
| 35 | ASCE Strength 5 (d) | Yes | Y | | DL | 1.2 | Sds*DL | .2 | Rho*ELZ | -1 | LL | .5 | LLS | 1 | SL | .2 | SLN | .2 | | | | | | |
| 36 | ASCE Strength 7 (a) | Yes | Y | | DL | .9 | Sds*DL | -.2 | Rho*ELX | 1 | | | | | | | | | | | | | | |
| 37 | ASCE Strength 7 (b) | Yes | Y | | DL | .9 | Sds*DL | -.2 | Rho*ELZ | 1 | | | | | | | | | | | | | | |
| 38 | ASCE Strength 7 (c) | Yes | Y | | DL | .9 | Sds*DL | -.2 | Rho*ELX | -1 | | | | | | | | | | | | | | |
| 39 | ASCE Strength 7 (d) | Yes | Y | | DL | .9 | Sds*DL | -.2 | Rho*ELZ | -1 | | | | | | | | | | | | | | |
| 40 | | | | | | | | | | | | | | | | | | | | | | | | |

## Load Combinations (Continued)

| | Description | Solve | PD... | SR... | BLC | Factor | BLC | Factor | BLC | Factor | BLC | Factor | BLC | Factor | BLC | Factor | BLC | Factor | BLC | Factor | BLC | Factor | BLC | Factor |
|---|---|---|---|---|---|---|---|---|---|---|---|---|---|---|---|---|---|---|---|---|---|---|---|---|
| 41 | Orthogonal Seismic Strength Combinations | | | | | | | | | | | | | | | | | | | | | | | |
| 42 | ASCE Strength 5 (a) | Yes | Y | | DL | 1.2 | Sds*DL | .2 | Rho*ELX | 1 | Rho*ELZ | .3 | LL | .5 | LLS | 1 | SL | .2 | SLN | .2 | | | | |
| 43 | ASCE Strength 5 (b) | Yes | Y | | DL | 1.2 | Sds*DL | .2 | Rho*ELZ | 1 | Rho*ELX | .3 | LL | .5 | LLS | 1 | SL | .2 | SLN | .2 | | | | |
| 44 | ASCE Strength 5 (c) | Yes | Y | | DL | 1.2 | Sds*DL | .2 | Rho*ELX | 1 | Rho*ELZ | -.3 | LL | .5 | LLS | 1 | SL | .2 | SLN | .2 | | | | |
| 45 | ASCE Strength 5 (d) | Yes | Y | | DL | 1.2 | Sds*DL | .2 | Rho*ELZ | 1 | Rho*ELX | -.3 | LL | .5 | LLS | 1 | SL | .2 | SLN | .2 | | | | |
| 46 | ASCE Strength 5 (e) | Yes | Y | | DL | 1.2 | Sds*DL | .2 | Rho*ELX | -1 | Rho*ELZ | -.3 | LL | .5 | LLS | 1 | SL | .2 | SLN | .2 | | | | |
| 47 | ASCE Strength 5 (f) | Yes | Y | | DL | 1.2 | Sds*DL | .2 | Rho*ELZ | -1 | Rho*ELX | -.3 | LL | .5 | LLS | 1 | SL | .2 | SLN | .2 | | | | |
| 48 | ASCE Strength 5 (g) | Yes | Y | | DL | 1.2 | Sds*DL | .2 | Rho*ELX | -1 | Rho*ELZ | .3 | LL | .5 | LLS | 1 | SL | .2 | SLN | .2 | | | | |
| 49 | ASCE Strength 5 (h) | Yes | Y | | DL | 1.2 | Sds*DL | .2 | Rho*ELZ | -1 | Rho*ELX | .3 | LL | .5 | LLS | 1 | SL | .2 | SLN | .2 | | | | |
| 50 | ASCE Strength 7 (a) | Yes | Y | | DL | .9 | Sds*DL | -.2 | Rho*ELX | 1 | Rho*ELZ | .3 | | | | | | | | | | | | |
| 51 | ASCE Strength 7 (b) | Yes | Y | | DL | .9 | Sds*DL | -.2 | Rho*ELZ | 1 | Rho*ELX | .3 | | | | | | | | | | | | |
| 52 | ASCE Strength 7 (c) | Yes | Y | | DL | .9 | Sds*DL | -.2 | Rho*ELX | 1 | Rho*ELZ | -.3 | | | | | | | | | | | | |
| 53 | ASCE Strength 7 (d) | Yes | Y | | DL | .9 | Sds*DL | -.2 | Rho*ELZ | 1 | Rho*ELX | -.3 | | | | | | | | | | | | |
| 54 | ASCE Strength 7 (e) | Yes | Y | | DL | .9 | Sds*DL | -.2 | Rho*ELX | -1 | Rho*ELZ | -.3 | | | | | | | | | | | | |
| 55 | ASCE Strength 7 (f) | Yes | Y | | DL | .9 | Sds*DL | -.2 | Rho*ELZ | -1 | Rho*ELX | -.3 | | | | | | | | | | | | |
| 56 | ASCE Strength 7 (g) | Yes | Y | | DL | .9 | Sds*DL | -.2 | Rho*ELX | -1 | Rho*ELZ | .3 | | | | | | | | | | | | |
| 57 | ASCE Strength 7 (h) | Yes | Y | | DL | .9 | Sds*DL | -.2 | Rho*ELZ | -1 | Rho*ELX | .3 | | | | | | | | | | | | |
| 58 | | | | | | | | | | | | | | | | | | | | | | | | |
| 59 | Seismic Strength Comb with Overstrength Factor | | | | | | | | | | | | | | | | | | | | | | | |
| 60 | ASCE Strength 5 (os-a) | | Y | | DL | 1.2 | Sds*DL | .2 | Om*ELX | 1 | LL | .5 | LLS | 1 | SL | .2 | SLN | .2 | | | | | | |
| 61 | ASCE Strength 5 (os-b) | | Y | | DL | 1.2 | Sds*DL | .2 | Om*ELZ | 1 | LL | .5 | LLS | 1 | SL | .2 | SLN | .2 | | | | | | |
| 62 | ASCE Strength 5 (os-c) | | Y | | DL | 1.2 | Sds*DL | .2 | Om*ELX | -1 | LL | .5 | LLS | 1 | SL | .2 | SLN | .2 | | | | | | |
| 63 | ASCE Strength 5 (os-d) | | Y | | DL | 1.2 | Sds*DL | .2 | Om*ELZ | -1 | LL | .5 | LLS | 1 | SL | .2 | SLN | .2 | | | | | | |
| 64 | ASCE Strength 7 (os-a) | | Y | | DL | .9 | Sds*DL | -.2 | Om*ELX | 1 | | | | | | | | | | | | | | |
| 65 | ASCE Strength 7 (os-b) | | Y | | DL | .9 | Sds*DL | -.2 | Om*ELZ | 1 | | | | | | | | | | | | | | |
| 66 | ASCE Strength 7 (os-c) | | Y | | DL | .9 | Sds*DL | -.2 | Om*ELX | -1 | | | | | | | | | | | | | | |
| 67 | ASCE Strength 7 (os-d) | | Y | | DL | .9 | Sds*DL | -.2 | Om*ELZ | -1 | | | | | | | | | | | | | | |
| 68 | | | | | | | | | | | | | | | | | | | | | | | | |
| 69 | Orthog Seismic Strength Comb with Overstrength | | | | | | | | | | | | | | | | | | | | | | | |
| 70 | ASCE Strength 5 (os-a) | | Y | | DL | 1.2 | Sds*DL | .2 | Om*ELX | 1 | Om*ELZ | .3 | LL | .5 | LLS | 1 | SL | .2 | SLN | .2 | | | | |
| 71 | ASCE Strength 5 (os-b) | | Y | | DL | 1.2 | Sds*DL | .2 | Om*ELZ | 1 | Om*ELX | .3 | LL | .5 | LLS | 1 | SL | .2 | SLN | .2 | | | | |
| 72 | ASCE Strength 5 (os-c) | | Y | | DL | 1.2 | Sds*DL | .2 | Om*ELX | 1 | Om*ELZ | -.3 | LL | .5 | LLS | 1 | SL | .2 | SLN | .2 | | | | |
| 73 | ASCE Strength 5 (os-d) | | Y | | DL | 1.2 | Sds*DL | .2 | Om*ELZ | 1 | Om*ELX | -.3 | LL | .5 | LLS | 1 | SL | .2 | SLN | .2 | | | | |
| 74 | ASCE Strength 5 (os-e) | | Y | | DL | 1.2 | Sds*DL | .2 | Om*ELX | -1 | Om*ELZ | -.3 | LL | .5 | LLS | 1 | SL | .2 | SLN | .2 | | | | |
| 75 | ASCE Strength 5 (os-f) | | Y | | DL | 1.2 | Sds*DL | .2 | Om*ELZ | -1 | Om*ELX | -.3 | LL | .5 | LLS | 1 | SL | .2 | SLN | .2 | | | | |
| 76 | ASCE Strength 5 (os-g) | | Y | | DL | 1.2 | Sds*DL | .2 | Om*ELX | -1 | Om*ELZ | .3 | LL | .5 | LLS | 1 | SL | .2 | SLN | .2 | | | | |
| 77 | ASCE Strength 5 (os-h) | | Y | | DL | 1.2 | Sds*DL | .2 | Om*ELZ | -1 | Om*ELX | .3 | LL | .5 | LLS | 1 | SL | .2 | SLN | .2 | | | | |
| 78 | ASCE Strength 7 (os-a) | | Y | | DL | .9 | Sds*DL | -.2 | Om*ELX | 1 | Om*ELZ | .3 | | | | | | | | | | | | |
| 79 | ASCE Strength 7 (os-b) | | Y | | DL | .9 | Sds*DL | -.2 | Om*ELZ | 1 | Om*ELX | .3 | | | | | | | | | | | | |
| 80 | ASCE Strength 7 (os-c) | | Y | | DL | .9 | Sds*DL | -.2 | Om*ELX | 1 | Om*ELZ | -.3 | | | | | | | | | | | | |

## Load Combinations (Continued)

| | Description | Solve | PD... | SR... | BLC | Factor | BLC | Factor | BLC | Factor | BLC | Factor | BLC | Factor | BLC | Factor | BLC | Factor | BLC | Factor | BLC | Factor | BLC | Factor |
|---|---|---|---|---|---|---|---|---|---|---|---|---|---|---|---|---|---|---|---|---|---|---|---|---|
| 81 | ASCE Strength 7 (os-d) | | Y | | DL | .9 | Sds*DL | -.2 | Om*ELZ | 1 | Om*ELX | -.3 | | | | | | | | | | | | |
| 82 | ASCE Strength 7 (os-e) | | Y | | DL | .9 | Sds*DL | -.2 | Om*ELX | -1 | Om*ELZ | -.3 | | | | | | | | | | | | |
| 83 | ASCE Strength 7 (os-f) | | Y | | DL | .9 | Sds*DL | -.2 | Om*ELZ | -1 | Om*ELX | -.3 | | | | | | | | | | | | |
| 84 | ASCE Strength 7 (os-g) | | Y | | DL | .9 | Sds*DL | -.2 | Om*ELX | -1 | Om*ELZ | .3 | | | | | | | | | | | | |
| 85 | ASCE Strength 7 (os-h) | | Y | | DL | .9 | Sds*DL | -.2 | Om*ELZ | -1 | Om*ELX | .3 | | | | | | | | | | | | |
| 86 | | | Y | | | | | | | | | | | | | | | | | | | | | |
| 87 | Drift Cases | | | | | | | | | | | | | | | | | | | | | | | |
| 88 | | | | | | | | | | | | | | | | | | | | | | | | |
| 89 | ASCE Strength 5 (a) | | Y | | DL | 1.2 | Sds*DL | .2 | ELX | 1 | LL | .5 | LLS | 1 | SL | .2 | SLN | .2 | | | | | | |
| 90 | ASCE Strength 5 (b) | | Y | | DL | 1.2 | Sds*DL | .2 | ELZ | 1 | LL | .5 | LLS | 1 | SL | .2 | SLN | .2 | | | | | | |
| 91 | ASCE Strength 5 (c) | | Y | | DL | 1.2 | Sds*DL | .2 | ELX | -1 | LL | .5 | LLS | 1 | SL | .2 | SLN | .2 | | | | | | |
| 92 | ASCE Strength 5 (d) | | Y | | DL | 1.2 | Sds*DL | .2 | ELZ | -1 | LL | .5 | LLS | 1 | SL | .2 | SLN | .2 | | | | | | |
| 93 | ASCE Strength 7 (a) | | Y | | DL | .9 | Sds*DL | -.2 | ELX | 1 | | | | | | | | | | | | | | |
| 94 | ASCE Strength 7 (b) | | Y | | DL | .9 | Sds*DL | -.2 | ELZ | 1 | | | | | | | | | | | | | | |
| 95 | ASCE Strength 7 (c) | | Y | | DL | .9 | Sds*DL | -.2 | ELX | -1 | | | | | | | | | | | | | | |
| 96 | ASCE Strength 7 (d) | | Y | | DL | .9 | Sds*DL | -.2 | ELZ | -1 | | | | | | | | | | | | | | |
| 97 | | | | | | | | | | | | | | | | | | | | | | | | |
| 98 | Wind Strength Cases +X & +Z Directions-Pos | | | | | | | | | | | | | | | | | | | | | | | |
| 99 | | | | | | | | | | | | | | | | | | | | | | | | |
| 100 | ASCE Strength 3 (b) (a) | Yes | Y | | DL | 1.2 | RLL | 1.6 | 12 | .5 | | | | | | | | | | | | | | |
| 101 | ASCE Strength 3 (b) (b) | Yes | Y | | DL | 1.2 | RLL | 1.6 | 14 | .5 | | | | | | | | | | | | | | |
| 102 | ASCE Strength 3 (b) (c) | Yes | Y | | DL | 1.2 | RLL | 1.6 | 12 | -.5 | | | | | | | | | | | | | | |
| 103 | ASCE Strength 3 (b) (d) | Yes | Y | | DL | 1.2 | RLL | 1.6 | 14 | -.5 | | | | | | | | | | | | | | |
| 104 | ASCE Strength 3 (d) (a) | Yes | Y | | DL | 1.2 | SL | 1.6 | SLN | 1.6 | 12 | .5 | | | | | | | | | | | | |
| 105 | ASCE Strength 3 (d) (b) | Yes | Y | | DL | 1.2 | SL | 1.6 | SLN | 1.6 | 14 | .5 | | | | | | | | | | | | |
| 106 | ASCE Strength 3 (d) (c) | Yes | Y | | DL | 1.2 | SL | 1.6 | SLN | 1.6 | 12 | -.5 | | | | | | | | | | | | |
| 107 | ASCE Strength 3 (d) (d) | Yes | Y | | DL | 1.2 | SL | 1.6 | SLN | 1.6 | 14 | -.5 | | | | | | | | | | | | |
| 108 | ASCE Strength 3 (f) (a) | Yes | Y | | DL | 1.2 | 12 | .5 | | | | | | | | | | | | | | | | |
| 109 | ASCE Strength 3 (f) (b) | Yes | Y | | DL | 1.2 | 14 | .5 | | | | | | | | | | | | | | | | |
| 110 | ASCE Strength 3 (f) (c) | Yes | Y | | DL | 1.2 | 12 | -.5 | | | | | | | | | | | | | | | | |
| 111 | ASCE Strength 3 (f) (d) | Yes | Y | | DL | 1.2 | 14 | -.5 | | | | | | | | | | | | | | | | |
| 112 | ASCE Strength 4 (a) (a) | Yes | Y | | DL | 1.2 | 12 | 1 | LL | .5 | LLS | 1 | RLL | .5 | | | | | | | | | | |
| 113 | ASCE Strength 4 (a) (b) | Yes | Y | | DL | 1.2 | 14 | 1 | LL | .5 | LLS | 1 | RLL | .5 | | | | | | | | | | |
| 114 | ASCE Strength 4 (a) (c) | Yes | Y | | DL | 1.2 | 12 | -1 | LL | .5 | LLS | 1 | RLL | .5 | | | | | | | | | | |
| 115 | ASCE Strength 4 (a) (d) | Yes | Y | | DL | 1.2 | 14 | -1 | LL | .5 | LLS | 1 | RLL | .5 | | | | | | | | | | |
| 116 | ASCE Strength 4 (b) (a) | Yes | Y | | DL | 1.2 | 12 | 1 | LL | .5 | LLS | 1 | SL | .5 | SLN | .5 | | | | | | | | |
| 117 | ASCE Strength 4 (b) (b) | Yes | Y | | DL | 1.2 | 14 | 1 | LL | .5 | LLS | 1 | SL | .5 | SLN | .5 | | | | | | | | |
| 118 | ASCE Strength 4 (b) (c) | Yes | Y | | DL | 1.2 | 12 | -1 | LL | .5 | LLS | 1 | SL | .5 | SLN | .5 | | | | | | | | |
| 119 | ASCE Strength 4 (b) (d) | Yes | Y | | DL | 1.2 | 14 | -1 | LL | .5 | LLS | 1 | SL | .5 | SLN | .5 | | | | | | | | |
| 120 | ASCE Strength 4 (c) (a) | Yes | Y | | DL | 1.2 | 12 | 1 | LL | .5 | LLS | 1 | | | | | | | | | | | | |

## Load Combinations (Continued)

| | Description | Solve | PD... | SR... | BLC | Factor | BLC | Factor | BLC | Factor | BLC | Factor | BLC | Factor | BLC | Factor | BLC | Factor | BLC | Factor | BLC | Factor | BLC | Factor |
|---|---|---|---|---|---|---|---|---|---|---|---|---|---|---|---|---|---|---|---|---|---|---|---|---|
| 121 | ASCE Strength 4 (c) (b) | Yes | Y | | DL | 1.2 | 14 | 1 | LL | .5 | LLS | 1 | | | | | | | | | | | | |
| 122 | ASCE Strength 4 (c) (c) | Yes | Y | | DL | 1.2 | 12 | -1 | LL | .5 | LLS | 1 | | | | | | | | | | | | |
| 123 | ASCE Strength 4 (c) (d) | Yes | Y | | DL | 1.2 | 14 | -1 | LL | .5 | LLS | 1 | | | | | | | | | | | | |
| 124 | ASCE Strength 6 (a) | Yes | Y | | DL | .9 | 12 | 1 | | | | | | | | | | | | | | | | |
| 125 | ASCE Strength 6 (b) | Yes | Y | | DL | .9 | 14 | 1 | | | | | | | | | | | | | | | | |
| 126 | ASCE Strength 6 (c) | Yes | Y | | DL | .9 | 12 | -1 | | | | | | | | | | | | | | | | |
| 127 | ASCE Strength 6 (d) | Yes | Y | | DL | .9 | 14 | -1 | | | | | | | | | | | | | | | | |
| 128 | | | | | | | | | | | | | | | | | | | | | | | | |
| 129 | Wind Strength Cases -X & -Z Directions -POS | | | | | | | | | | | | | | | | | | | | | | | |
| 130 | | | | | | | | | | | | | | | | | | | | | | | | |
| 131 | ASCE Strength 3 (b) (a) | Yes | Y | | DL | 1.2 | RLL | 1.6 | 13 | .5 | | | | | | | | | | | | | | |
| 132 | ASCE Strength 3 (b) (b) | Yes | Y | | DL | 1.2 | RLL | 1.6 | 15 | .5 | | | | | | | | | | | | | | |
| 133 | ASCE Strength 3 (b) (c) | Yes | Y | | DL | 1.2 | RLL | 1.6 | 13 | -.5 | | | | | | | | | | | | | | |
| 134 | ASCE Strength 3 (b) (d) | Yes | Y | | DL | 1.2 | RLL | 1.6 | 15 | -.5 | | | | | | | | | | | | | | |
| 135 | ASCE Strength 3 (d) (a) | Yes | Y | | DL | 1.2 | SL | 1.6 | SLN | 1.6 | 13 | .5 | | | | | | | | | | | | |
| 136 | ASCE Strength 3 (d) (b) | Yes | Y | | DL | 1.2 | SL | 1.6 | SLN | 1.6 | 15 | .5 | | | | | | | | | | | | |
| 137 | ASCE Strength 3 (d) (c) | Yes | Y | | DL | 1.2 | SL | 1.6 | SLN | 1.6 | 13 | -.5 | | | | | | | | | | | | |
| 138 | ASCE Strength 3 (d) (d) | Yes | Y | | DL | 1.2 | SL | 1.6 | SLN | 1.6 | 15 | -.5 | | | | | | | | | | | | |
| 139 | ASCE Strength 3 (f) (a) | Yes | Y | | DL | 1.2 | 13 | .5 | | | | | | | | | | | | | | | | |
| 140 | ASCE Strength 3 (f) (b) | Yes | Y | | DL | 1.2 | 15 | .5 | | | | | | | | | | | | | | | | |
| 141 | ASCE Strength 3 (f) (c) | Yes | Y | | DL | 1.2 | 13 | -.5 | | | | | | | | | | | | | | | | |
| 142 | ASCE Strength 3 (f) (d) | Yes | Y | | DL | 1.2 | 15 | -.5 | | | | | | | | | | | | | | | | |
| 143 | ASCE Strength 4 (a) (a) | Yes | Y | | DL | 1.2 | 13 | 1 | LL | .5 | LLS | 1 | RLL | .5 | | | | | | | | | | |
| 144 | ASCE Strength 4 (a) (b) | Yes | Y | | DL | 1.2 | 15 | 1 | LL | .5 | LLS | 1 | RLL | .5 | | | | | | | | | | |
| 145 | ASCE Strength 4 (a) (c) | Yes | Y | | DL | 1.2 | 13 | -1 | LL | .5 | LLS | 1 | RLL | .5 | | | | | | | | | | |
| 146 | ASCE Strength 4 (a) (d) | Yes | Y | | DL | 1.2 | 15 | -1 | LL | .5 | LLS | 1 | RLL | .5 | | | | | | | | | | |
| 147 | ASCE Strength 4 (b) (a) | Yes | Y | | DL | 1.2 | 13 | 1 | LL | .5 | LLS | 1 | SL | .5 | SLN | .5 | | | | | | | | |
| 148 | ASCE Strength 4 (b) (b) | Yes | Y | | DL | 1.2 | 15 | 1 | LL | .5 | LLS | 1 | SL | .5 | SLN | .5 | | | | | | | | |
| 149 | ASCE Strength 4 (b) (c) | Yes | Y | | DL | 1.2 | 13 | -1 | LL | .5 | LLS | 1 | SL | .5 | SLN | .5 | | | | | | | | |
| 150 | ASCE Strength 4 (b) (d) | Yes | Y | | DL | 1.2 | 15 | -1 | LL | .5 | LLS | 1 | SL | .5 | SLN | .5 | | | | | | | | |
| 151 | ASCE Strength 4 (c) (a) | Yes | Y | | DL | 1.2 | 13 | 1 | LL | .5 | LLS | 1 | | | | | | | | | | | | |
| 152 | ASCE Strength 4 (c) (b) | Yes | Y | | DL | 1.2 | 15 | 1 | LL | .5 | LLS | 1 | | | | | | | | | | | | |
| 153 | ASCE Strength 4 (c) (c) | Yes | Y | | DL | 1.2 | 13 | -1 | LL | .5 | LLS | 1 | | | | | | | | | | | | |
| 154 | ASCE Strength 4 (c) (d) | Yes | Y | | DL | 1.2 | 15 | -1 | LL | .5 | LLS | 1 | | | | | | | | | | | | |
| 155 | ASCE Strength 6 (a) | Yes | Y | | DL | .9 | 13 | 1 | | | | | | | | | | | | | | | | |
| 156 | ASCE Strength 6 (b) | Yes | Y | | DL | .9 | 15 | 1 | | | | | | | | | | | | | | | | |
| 157 | ASCE Strength 6 (c) | Yes | Y | | DL | .9 | 13 | -1 | | | | | | | | | | | | | | | | |
| 158 | ASCE Strength 6 (d) | Yes | Y | | DL | .9 | 15 | -1 | | | | | | | | | | | | | | | | |
| 159 | | | | | | | | | | | | | | | | | | | | | | | | |
| 160 | Wind Strength Cases +X &+ Z Directions-Neg | | | | | | | | | | | | | | | | | | | | | | | |

## Load Combinations (Continued)

| | Description | Solve | PD... | SR... | BLC | Factor | BLC | Factor | BLC | Factor | BLC | Factor | BLC | Factor | BLC | Factor | BLC | Factor | BLC | Factor | BLC | Factor | BLC | Factor |
|---|---|---|---|---|---|---|---|---|---|---|---|---|---|---|---|---|---|---|---|---|---|---|---|---|
| 161 | ASCE Strength 3 (b) (a) | Yes | Y | | DL | 1.2 | RLL | 1.6 | 16 | .5 | | | | | | | | | | | | | | |
| 162 | ASCE Strength 3 (b) (b) | Yes | Y | | DL | 1.2 | RLL | 1.6 | 18 | .5 | | | | | | | | | | | | | | |
| 163 | ASCE Strength 3 (b) (c) | Yes | Y | | DL | 1.2 | RLL | 1.6 | 16 | -.5 | | | | | | | | | | | | | | |
| 164 | ASCE Strength 3 (b) (d) | Yes | Y | | DL | 1.2 | RLL | 1.6 | 18 | -.5 | | | | | | | | | | | | | | |
| 165 | ASCE Strength 3 (d) (a) | Yes | Y | | DL | 1.2 | SL | 1.6 | SLN | 1.6 | 16 | .5 | | | | | | | | | | | | |
| 166 | ASCE Strength 3 (d) (b) | Yes | Y | | DL | 1.2 | SL | 1.6 | SLN | 1.6 | 18 | .5 | | | | | | | | | | | | |
| 167 | ASCE Strength 3 (d) (c) | Yes | Y | | DL | 1.2 | SL | 1.6 | SLN | 1.6 | 16 | -.5 | | | | | | | | | | | | |
| 168 | ASCE Strength 3 (d) (d) | Yes | Y | | DL | 1.2 | SL | 1.6 | SLN | 1.6 | 18 | -.5 | | | | | | | | | | | | |
| 169 | ASCE Strength 3 (f) (a) | Yes | Y | | DL | 1.2 | 16 | .5 | | | | | | | | | | | | | | | | |
| 170 | ASCE Strength 3 (f) (b) | Yes | Y | | DL | 1.2 | 18 | .5 | | | | | | | | | | | | | | | | |
| 171 | ASCE Strength 3 (f) (c) | Yes | Y | | DL | 1.2 | 16 | -.5 | | | | | | | | | | | | | | | | |
| 172 | ASCE Strength 3 (f) (d) | Yes | Y | | DL | 1.2 | 18 | -.5 | | | | | | | | | | | | | | | | |
| 173 | ASCE Strength 4 (a) (a) | Yes | Y | | DL | 1.2 | 16 | 1 | LL | .5 | LLS | 1 | RLL | .5 | | | | | | | | | | |
| 174 | ASCE Strength 4 (a) (b) | Yes | Y | | DL | 1.2 | 18 | 1 | LL | .5 | LLS | 1 | RLL | .5 | | | | | | | | | | |
| 175 | ASCE Strength 4 (a) (c) | Yes | Y | | DL | 1.2 | 16 | -1 | LL | .5 | LLS | 1 | RLL | .5 | | | | | | | | | | |
| 176 | ASCE Strength 4 (a) (d) | Yes | Y | | DL | 1.2 | 18 | -1 | LL | .5 | LLS | 1 | RLL | .5 | | | | | | | | | | |
| 177 | ASCE Strength 4 (b) (a) | Yes | Y | | DL | 1.2 | 16 | 1 | LL | .5 | LLS | 1 | SL | .5 | SLN | .5 | | | | | | | | |
| 178 | ASCE Strength 4 (b) (b) | Yes | Y | | DL | 1.2 | 18 | 1 | LL | .5 | LLS | 1 | SL | .5 | SLN | .5 | | | | | | | | |
| 179 | ASCE Strength 4 (b) (c) | Yes | Y | | DL | 1.2 | 16 | -1 | LL | .5 | LLS | 1 | SL | .5 | SLN | .5 | | | | | | | | |
| 180 | ASCE Strength 4 (b) (d) | Yes | Y | | DL | 1.2 | 18 | -1 | LL | .5 | LLS | 1 | SL | .5 | SLN | .5 | | | | | | | | |
| 181 | ASCE Strength 4 (c) (a) | Yes | Y | | DL | 1.2 | 16 | 1 | LL | .5 | LLS | 1 | | | | | | | | | | | | |
| 182 | ASCE Strength 4 (c) (b) | Yes | Y | | DL | 1.2 | 18 | 1 | LL | .5 | LLS | 1 | | | | | | | | | | | | |
| 183 | ASCE Strength 4 (c) (c) | Yes | Y | | DL | 1.2 | 16 | -1 | LL | .5 | LLS | 1 | | | | | | | | | | | | |
| 184 | ASCE Strength 4 (c) (d) | Yes | Y | | DL | 1.2 | 18 | -1 | LL | .5 | LLS | 1 | | | | | | | | | | | | |
| 185 | ASCE Strength 6 (a) | Yes | Y | | DL | .9 | 16 | 1 | | | | | | | | | | | | | | | | |
| 186 | ASCE Strength 6 (b) | Yes | Y | | DL | .9 | 18 | 1 | | | | | | | | | | | | | | | | |
| 187 | ASCE Strength 6 (c) | Yes | Y | | DL | .9 | 16 | -1 | | | | | | | | | | | | | | | | |
| 188 | ASCE Strength 6 (d) | Yes | Y | | DL | .9 | 18 | -1 | | | | | | | | | | | | | | | | |
| 189 | | | | | | | | | | | | | | | | | | | | | | | | |
| 190 | Wind Strength Cases -X & -Z Directions -NEG | | | | | | | | | | | | | | | | | | | | | | | |
| 191 | ASCE Strength 3 (b) (a) | Yes | Y | | DL | 1.2 | RLL | 1.6 | 13 | .5 | | | | | | | | | | | | | | |
| 192 | ASCE Strength 3 (b) (b) | Yes | Y | | DL | 1.2 | RLL | 1.6 | 15 | .5 | | | | | | | | | | | | | | |
| 193 | ASCE Strength 3 (b) (c) | Yes | Y | | DL | 1.2 | RLL | 1.6 | 13 | -.5 | | | | | | | | | | | | | | |
| 194 | ASCE Strength 3 (b) (d) | Yes | Y | | DL | 1.2 | RLL | 1.6 | 15 | -.5 | | | | | | | | | | | | | | |
| 195 | ASCE Strength 3 (d) (a) | Yes | Y | | DL | 1.2 | SL | 1.6 | SLN | 1.6 | 13 | .5 | | | | | | | | | | | | |
| 196 | ASCE Strength 3 (d) (b) | Yes | Y | | DL | 1.2 | SL | 1.6 | SLN | 1.6 | 15 | .5 | | | | | | | | | | | | |
| 197 | ASCE Strength 3 (d) (c) | Yes | Y | | DL | 1.2 | SL | 1.6 | SLN | 1.6 | 13 | -.5 | | | | | | | | | | | | |
| 198 | ASCE Strength 3 (d) (d) | Yes | Y | | DL | 1.2 | SL | 1.6 | SLN | 1.6 | 15 | -.5 | | | | | | | | | | | | |
| 199 | ASCE Strength 3 (f) (a) | Yes | Y | | DL | 1.2 | 13 | .5 | | | | | | | | | | | | | | | | |
| 200 | ASCE Strength 3 (f) (b) | Yes | Y | | DL | 1.2 | 15 | .5 | | | | | | | | | | | | | | | | |

## Load Combinations (Continued)

| | Description | Solve | PD... | SR... | BLC | Factor | BLC | Factor | BLC | Factor | BLC | Factor | BLC | Factor | BLC | Factor | BLC | Factor | BLC | Factor | BLC | Factor | BLC | Factor |
|---|---|---|---|---|---|---|---|---|---|---|---|---|---|---|---|---|---|---|---|---|---|---|---|---|
| 201 | ASCE Strength 3 (f) (c) | Yes | Y | | DL | 1.2 | 13 | -.5 | | | | | | | | | | | | | | | | |
| 202 | ASCE Strength 3 (f) (d) | Yes | Y | | DL | 1.2 | 15 | -.5 | | | | | | | | | | | | | | | | |
| 203 | ASCE Strength 4 (a) (a) | Yes | Y | | DL | 1.2 | 13 | 1 | LL | .5 | LLS | 1 | RLL | .5 | | | | | | | | | | |
| 204 | ASCE Strength 4 (a) (b) | Yes | Y | | DL | 1.2 | 15 | 1 | LL | .5 | LLS | 1 | RLL | .5 | | | | | | | | | | |
| 205 | ASCE Strength 4 (a) (c) | Yes | Y | | DL | 1.2 | 13 | -1 | LL | .5 | LLS | 1 | RLL | .5 | | | | | | | | | | |
| 206 | ASCE Strength 4 (a) (d) | Yes | Y | | DL | 1.2 | 15 | -1 | LL | .5 | LLS | 1 | RLL | .5 | | | | | | | | | | |
| 207 | ASCE Strength 4 (b) (a) | Yes | Y | | DL | 1.2 | 13 | 1 | LL | .5 | LLS | 1 | SL | .5 | SLN | .5 | | | | | | | | |
| 208 | ASCE Strength 4 (b) (b) | Yes | Y | | DL | 1.2 | 15 | 1 | LL | .5 | LLS | 1 | SL | .5 | SLN | .5 | | | | | | | | |
| 209 | ASCE Strength 4 (b) (c) | Yes | Y | | DL | 1.2 | 13 | -1 | LL | .5 | LLS | 1 | SL | .5 | SLN | .5 | | | | | | | | |
| 210 | ASCE Strength 4 (b) (d) | Yes | Y | | DL | 1.2 | 15 | -1 | LL | .5 | LLS | 1 | SL | .5 | SLN | .5 | | | | | | | | |
| 211 | ASCE Strength 4 (c) (a) | Yes | Y | | DL | 1.2 | 13 | 1 | LL | .5 | LLS | 1 | | | | | | | | | | | | |
| 212 | ASCE Strength 4 (c) (b) | Yes | Y | | DL | 1.2 | 15 | 1 | LL | .5 | LLS | 1 | | | | | | | | | | | | |
| 213 | ASCE Strength 4 (c) (c) | Yes | Y | | DL | 1.2 | 13 | -1 | LL | .5 | LLS | 1 | | | | | | | | | | | | |
| 214 | ASCE Strength 4 (c) (d) | Yes | Y | | DL | 1.2 | 15 | -1 | LL | .5 | LLS | 1 | | | | | | | | | | | | |
| 215 | ASCE Strength 6 (a) | Yes | Y | | DL | .9 | 13 | 1 | | | | | | | | | | | | | | | | |
| 216 | ASCE Strength 6 (b) | Yes | Y | | DL | .9 | 15 | 1 | | | | | | | | | | | | | | | | |
| 217 | ASCE Strength 6 (c) | Yes | Y | | DL | .9 | 13 | -1 | | | | | | | | | | | | | | | | |
| 218 | ASCE Strength 6 (d) | Yes | Y | | DL | .9 | 15 | -1 | | | | | | | | | | | | | | | | |
| 219 | | | | | | | | | | | | | | | | | | | | | | | | |
| 220 | Wind Strength Cases +X &+ Z Directions-Neg | | | | | | | | | | | | | | | | | | | | | | | |
| 221 | ASCE Strength 3 (b) (a) | Yes | Y | | DL | 1.2 | RLL | 1.6 | 17 | .5 | | | | | | | | | | | | | | |
| 222 | ASCE Strength 3 (b) (b) | Yes | Y | | DL | 1.2 | RLL | 1.6 | 19 | .5 | | | | | | | | | | | | | | |
| 223 | ASCE Strength 3 (b) (c) | Yes | Y | | DL | 1.2 | RLL | 1.6 | 17 | -.5 | | | | | | | | | | | | | | |
| 224 | ASCE Strength 3 (b) (d) | Yes | Y | | DL | 1.2 | RLL | 1.6 | 19 | -.5 | | | | | | | | | | | | | | |
| 225 | ASCE Strength 3 (d) (a) | Yes | Y | | DL | 1.2 | SL | 1.6 | SLN | 1.6 | 17 | .5 | | | | | | | | | | | | |
| 226 | ASCE Strength 3 (d) (b) | Yes | Y | | DL | 1.2 | SL | 1.6 | SLN | 1.6 | 19 | .5 | | | | | | | | | | | | |
| 227 | ASCE Strength 3 (d) (c) | Yes | Y | | DL | 1.2 | SL | 1.6 | SLN | 1.6 | 17 | -.5 | | | | | | | | | | | | |
| 228 | ASCE Strength 3 (d) (d) | Yes | Y | | DL | 1.2 | SL | 1.6 | SLN | 1.6 | 19 | -.5 | | | | | | | | | | | | |
| 229 | ASCE Strength 3 (f) (a) | Yes | Y | | DL | 1.2 | 17 | .5 | | | | | | | | | | | | | | | | |
| 230 | ASCE Strength 3 (f) (b) | Yes | Y | | DL | 1.2 | 19 | .5 | | | | | | | | | | | | | | | | |
| 231 | ASCE Strength 3 (f) (c) | Yes | Y | | DL | 1.2 | 17 | -.5 | | | | | | | | | | | | | | | | |
| 232 | ASCE Strength 3 (f) (d) | Yes | Y | | DL | 1.2 | 19 | -.5 | | | | | | | | | | | | | | | | |
| 233 | ASCE Strength 4 (a) (a) | Yes | Y | | DL | 1.2 | 17 | 1 | LL | .5 | LLS | 1 | RLL | .5 | | | | | | | | | | |
| 234 | ASCE Strength 4 (a) (b) | Yes | Y | | DL | 1.2 | 19 | 1 | LL | .5 | LLS | 1 | RLL | .5 | | | | | | | | | | |
| 235 | ASCE Strength 4 (a) (c) | Yes | Y | | DL | 1.2 | 17 | -1 | LL | .5 | LLS | 1 | RLL | .5 | | | | | | | | | | |
| 236 | ASCE Strength 4 (a) (d) | Yes | Y | | DL | 1.2 | 19 | -1 | LL | .5 | LLS | 1 | RLL | .5 | | | | | | | | | | |
| 237 | ASCE Strength 4 (b) (a) | Yes | Y | | DL | 1.2 | 17 | 1 | LL | .5 | LLS | 1 | SL | .5 | SLN | .5 | | | | | | | | |
| 238 | ASCE Strength 4 (b) (b) | Yes | Y | | DL | 1.2 | 19 | 1 | LL | .5 | LLS | 1 | SL | .5 | SLN | .5 | | | | | | | | |
| 239 | ASCE Strength 4 (b) (c) | Yes | Y | | DL | 1.2 | 17 | -1 | LL | .5 | LLS | 1 | SL | .5 | SLN | .5 | | | | | | | | |
| 240 | ASCE Strength 4 (b) (d) | Yes | Y | | DL | 1.2 | 19 | -1 | LL | .5 | LLS | 1 | SL | .5 | SLN | .5 | | | | | | | | |

## Load Combinations (Continued)

| | Description | Solve | PD... | SR... | BLC | Factor | BLC | Factor | BLC | Factor | BLC | Factor | BLC | Factor | BLC | Factor | BLC | Factor | BLC | Factor | BLC | Factor | BLC | Factor |
|---|---|---|---|---|---|---|---|---|---|---|---|---|---|---|---|---|---|---|---|---|---|---|---|---|
| 241 | ASCE Strength 4 (c) (a) | Yes | Y | | DL | 1.2 | 17 | 1 | LL | .5 | LLS | 1 | | | | | | | | | | | | |
| 242 | ASCE Strength 4 (c) (b) | Yes | Y | | DL | 1.2 | 19 | 1 | LL | .5 | LLS | 1 | | | | | | | | | | | | |
| 243 | ASCE Strength 4 (c) (c) | Yes | Y | | DL | 1.2 | 17 | -1 | LL | .5 | LLS | 1 | | | | | | | | | | | | |
| 244 | ASCE Strength 4 (c) (d) | Yes | Y | | DL | 1.2 | 19 | -1 | LL | .5 | LLS | 1 | | | | | | | | | | | | |
| 245 | ASCE Strength 6 (a) | Yes | Y | | DL | .9 | 17 | 1 | | | | | | | | | | | | | | | | |
| 246 | ASCE Strength 6 (b) | Yes | Y | | DL | .9 | 19 | 1 | | | | | | | | | | | | | | | | |
| 247 | ASCE Strength 6 (c) | Yes | Y | | DL | .9 | 17 | -1 | | | | | | | | | | | | | | | | |
| 248 | ASCE Strength 6 (d) | Yes | Y | | DL | .9 | 19 | -1 | | | | | | | | | | | | | | | | |
| 249 | | | | | | | | | | | | | | | | | | | | | | | | |
| 250 | LOAD COMBINATIONS FOR PLATE BUCKLING ... | | | | | | | | | | | | | | | | | | | | | | | |
| 251 | Seismic Strength Comb with Overstrength Factor | | | | | | | | | | | | | | | | | | | | | | | |
| 252 | ASCE Strength 5 (os-a) | | Y | | DL | 1.2 | Sds*DL | .2 | ELX | 2 | LL | .5 | LLS | 1 | SL | .2 | SLN | .2 | | | | | | |
| 253 | ASCE Strength 5 (os-b) | | Y | | DL | 1.2 | Sds*DL | .2 | ELZ | 2 | LL | .5 | LLS | 1 | SL | .2 | SLN | .2 | | | | | | |
| 254 | ASCE Strength 5 (os-c) | | Y | | DL | 1.2 | Sds*DL | .2 | ELX | -2 | LL | .5 | LLS | 1 | SL | .2 | SLN | .2 | | | | | | |
| 255 | ASCE Strength 5 (os-d) | | Y | | DL | 1.2 | Sds*DL | .2 | ELZ | -2 | LL | .5 | LLS | 1 | SL | .2 | SLN | .2 | | | | | | |
| 256 | ASCE Strength 7 (os-a) | | Y | | DL | .9 | Sds*DL | -.2 | ELX | 2 | | | | | | | | | | | | | | |
| 257 | ASCE Strength 7 (os-b) | | Y | | DL | .9 | Sds*DL | -.2 | ELZ | 2 | | | | | | | | | | | | | | |
| 258 | ASCE Strength 7 (os-c) | | Y | | DL | .9 | Sds*DL | -.2 | ELX | -2 | | | | | | | | | | | | | | |
| 259 | ASCE Strength 7 (os-d) | | Y | | DL | .9 | Sds*DL | -.2 | ELZ | -2 | | | | | | | | | | | | | | |
| 260 | | | | | | | | | | | | | | | | | | | | | | | | |
| 261 | Orthog Seismic Strength Comb with Overstrength | | | | | | | | | | | | | | | | | | | | | | | |
| 262 | ASCE Strength 5 (os-a) | | Y | | DL | 1.2 | Sds*DL | .2 | ELX | 2 | ELZ | .6 | LL | .5 | LLS | 1 | SL | .2 | SLN | .2 | | | | |
| 263 | ASCE Strength 5 (os-b) | | Y | | DL | 1.2 | Sds*DL | .2 | ELZ | 2 | ELX | .6 | LL | .5 | LLS | 1 | SL | .2 | SLN | .2 | | | | |
| 264 | ASCE Strength 5 (os-c) | | Y | | DL | 1.2 | Sds*DL | .2 | ELX | 2 | ELZ | -.6 | LL | .5 | LLS | 1 | SL | .2 | SLN | .2 | | | | |
| 265 | ASCE Strength 5 (os-d) | | Y | | DL | 1.2 | Sds*DL | .2 | ELZ | 2 | ELX | -.6 | LL | .5 | LLS | 1 | SL | .2 | SLN | .2 | | | | |
| 266 | ASCE Strength 5 (os-e) | | Y | | DL | 1.2 | Sds*DL | .2 | ELX | -2 | ELZ | -.6 | LL | .5 | LLS | 1 | SL | .2 | SLN | .2 | | | | |
| 267 | ASCE Strength 5 (os-f) | | Y | | DL | 1.2 | Sds*DL | .2 | ELZ | -2 | ELX | -.6 | LL | .5 | LLS | 1 | SL | .2 | SLN | .2 | | | | |
| 268 | ASCE Strength 5 (os-g) | | Y | | DL | 1.2 | Sds*DL | .2 | ELX | -2 | ELZ | .6 | LL | .5 | LLS | 1 | SL | .2 | SLN | .2 | | | | |
| 269 | ASCE Strength 5 (os-h) | | Y | | DL | 1.2 | Sds*DL | .2 | ELZ | -2 | ELX | .6 | LL | .5 | LLS | 1 | SL | .2 | SLN | .2 | | | | |
| 270 | ASCE Strength 7 (os-a) | | Y | | DL | .9 | Sds*DL | -.2 | ELX | 2 | ELZ | .6 | | | | | | | | | | | | |
| 271 | ASCE Strength 7 (os-b) | | Y | | DL | .9 | Sds*DL | -.2 | ELZ | 2 | ELX | .6 | | | | | | | | | | | | |
| 272 | ASCE Strength 7 (os-c) | | Y | | DL | .9 | Sds*DL | -.2 | ELX | 2 | ELZ | -.6 | | | | | | | | | | | | |
| 273 | ASCE Strength 7 (os-d) | | Y | | DL | .9 | Sds*DL | -.2 | ELZ | 2 | ELX | -.6 | | | | | | | | | | | | |
| 274 | ASCE Strength 7 (os-e) | | Y | | DL | .9 | Sds*DL | -.2 | ELX | -2 | ELZ | -.6 | | | | | | | | | | | | |
| 275 | ASCE Strength 7 (os-f) | | Y | | DL | .9 | Sds*DL | -.2 | ELZ | -2 | ELX | -.6 | | | | | | | | | | | | |
| 276 | ASCE Strength 7 (os-g) | | Y | | DL | .9 | Sds*DL | -.2 | ELX | -2 | ELZ | .6 | | | | | | | | | | | | |
| 277 | ASCE Strength 7 (os-h) | | Y | | DL | .9 | Sds*DL | -.2 | ELZ | -2 | ELX | .6 | | | | | | | | | | | | |

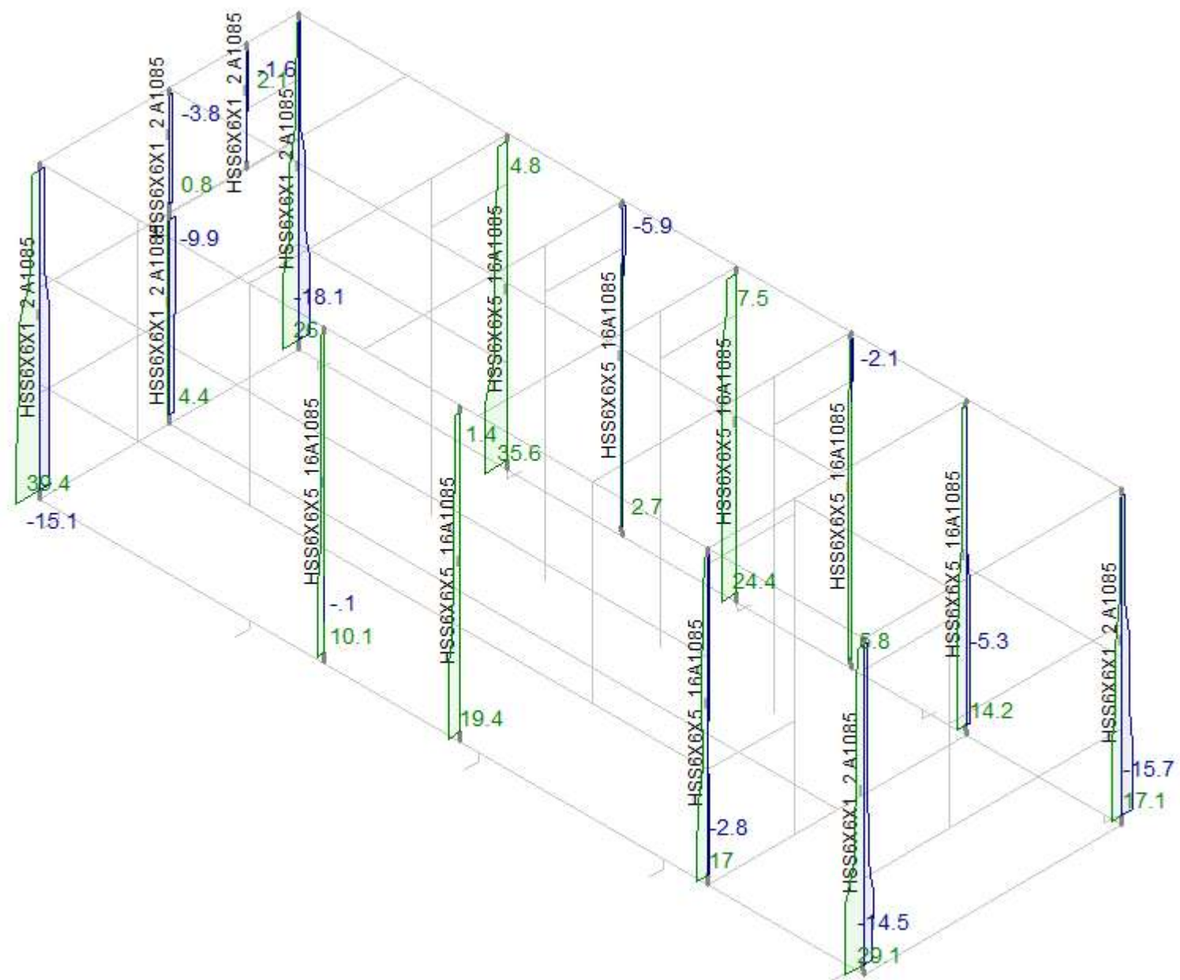


**TSCR PROCESS ENCLOSURE SKID – PERIMETER COLUMNS – LRFD AXIAL FORCE ENVELOPE**

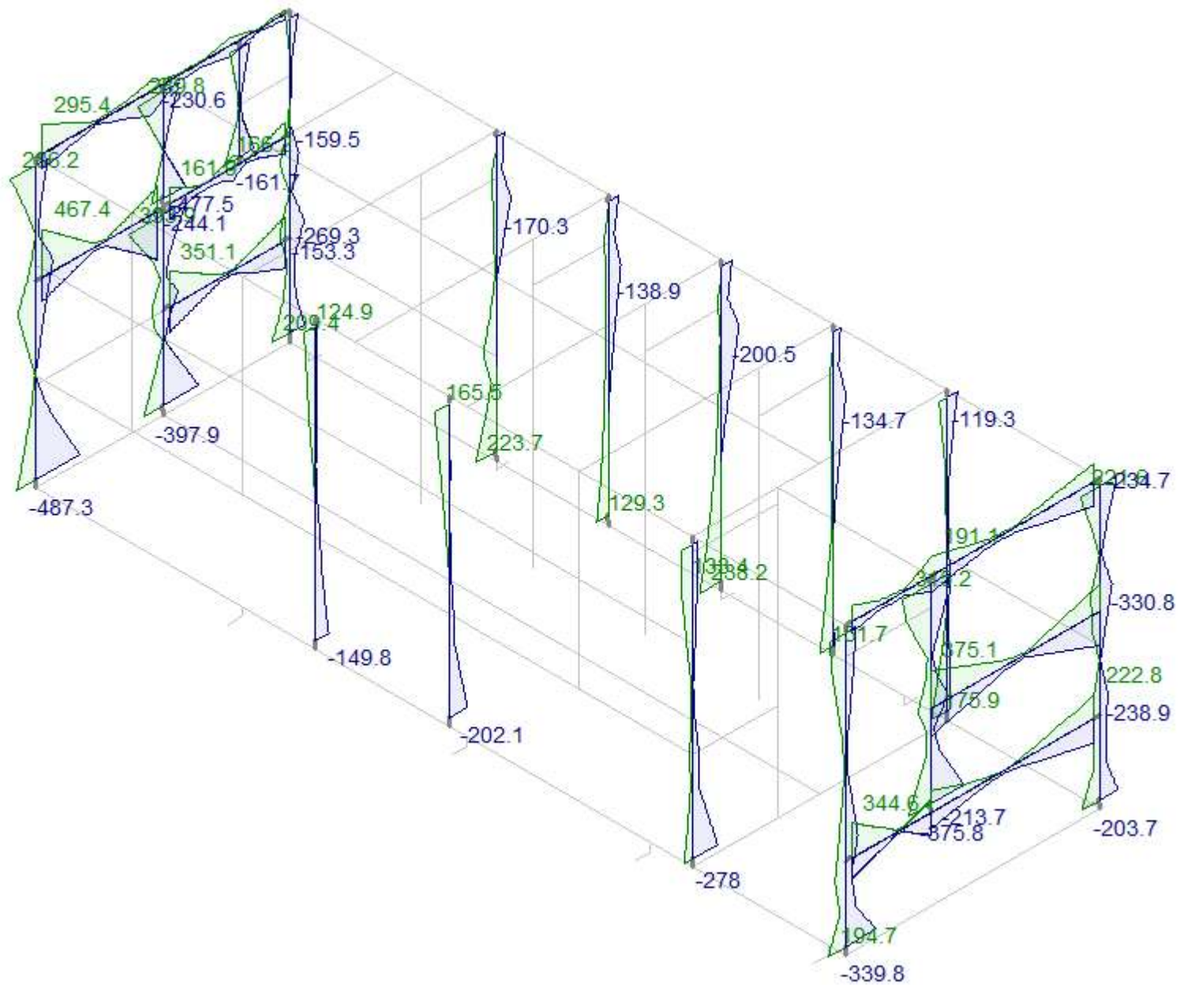


**TSCR PROCESS ENCLOSURE SKID – PERIMETER COLUMNS– LOCAL Z AXIS ENVELOPE BENDING MOMENTS**

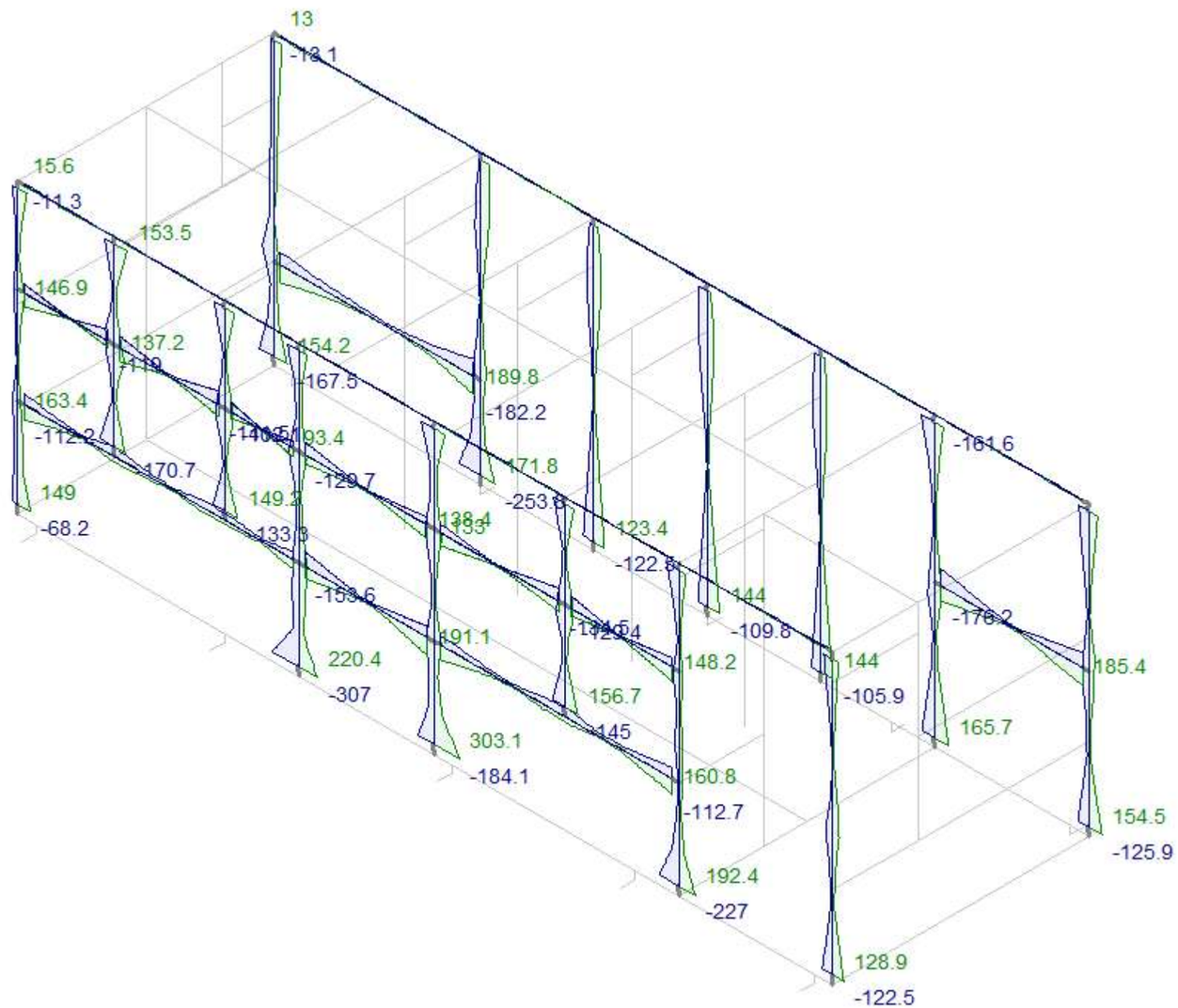


**TSCR PROCESS ENCLOSURE SKID – PERIMETER COLUMNS– LOCAL Y AXIS ENVELOPE BENDING MOMENTS**

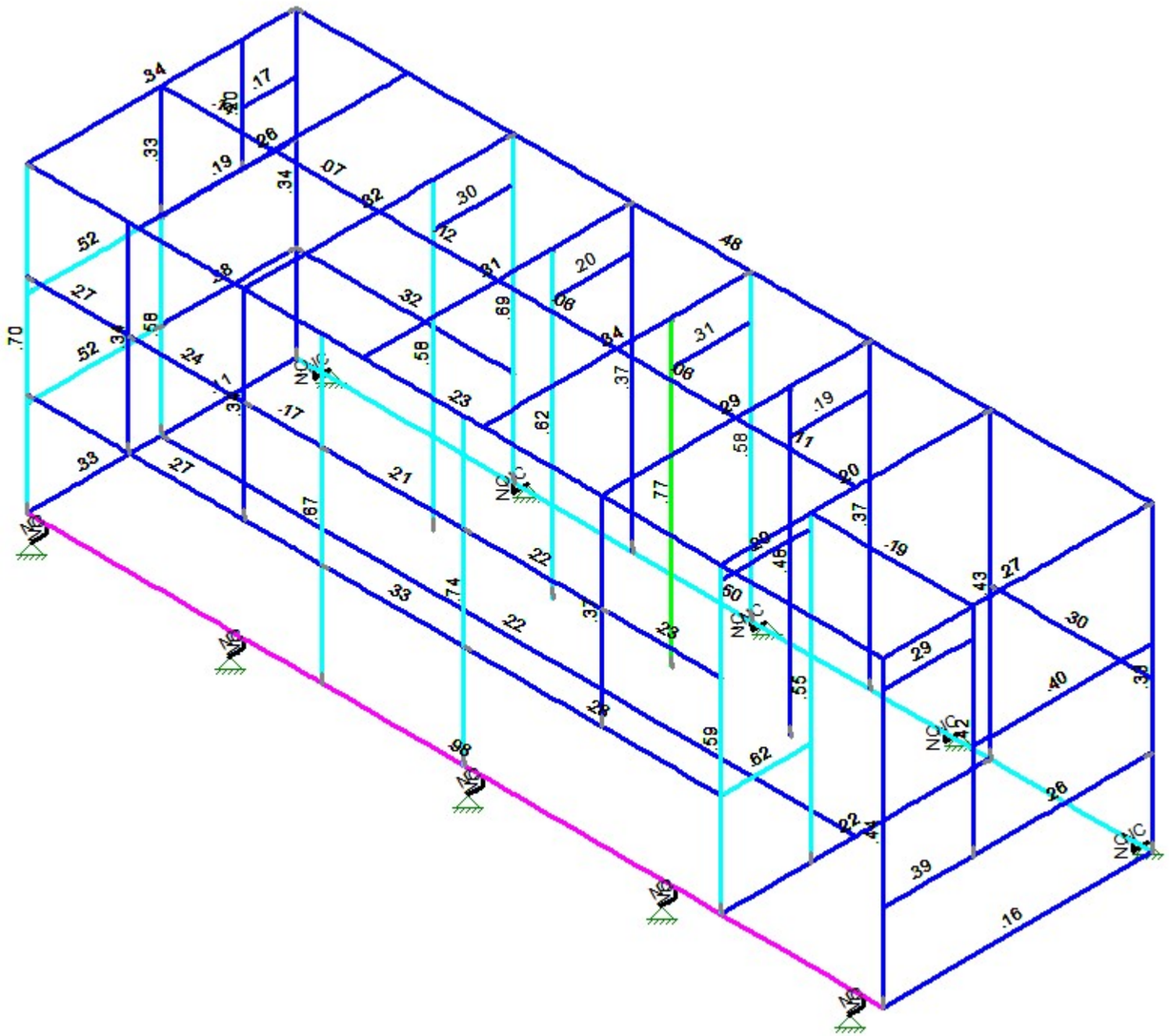

**TSCR PROCESS ENCLOSURE SKID – MAJOR FRAMING – AISC MEMBER CHECK**

**Discussion:** The Process Enclosure structure has been analyzed as an Ordinary Moment Frame (OMF) structure with Fully Restrained Joints. Per Ref 8, ANSI/AISC 341-16 Seismic Provisions for Structural Steel Buildings Commentary page 9.1-216, it is permissable to design the connections for the maximum forces that can be delivered to the connection by the system including the Overstrength Seismic Load.

Another option per AISC 341 is to design the connection for the required flexural stength of the member which is equal to 1.1RyMp, where Mp = FyZ and Ry is the ratio of expected yield stress to the specified yield

**For OMF HSS Major Framing Members**

ASTM A1085 Fy= 50.00 ksi
Ry= 1.25

For HSS6x6x1/2
Z= 20.90 in3
Mp= 1045.00 in-kip
1.1RyMp= 1436.88 in-kip

For HSS6x6x5/16
Z= 13.60 in3
Mp= 680.00 in-kip
1.1RyMp= 935.00 in-kip Moment Capacity

The major OMF Framing within the Process Enclosure Structure was analyzed using Risa 3D and an envelop solution with the Seismic Overstrength Factor = $\Omega$ = 2.0. It was determined that connection forces using the Overstrength Factor were significantly lower than what 1.1RyMp for all members under consideration.

The HSS Connections are governed by the requirements of AISC Chapter K, Table K3.2. The connections were analyzed using the program "HSS CONNEX Online" by the Steel Tube Institute. Solutions to the specific connections are summarize on the following page with specific results for each connection following the summary table.

All welds are assumed to be complete penetration welds and are classified as "Demand Critical" per the requirements on the next page.

The End Frame "Knee Joints" were analyzed using the method on page 67 of CIDECT Design Guide 3, Ref 9.

## 4b. Demand Critical Welds

Welds designated as demand critical shall be made with filler metals meeting the requirements specified in AWS D1.8/D1.8M clauses 6.1, 6.2 and 6.3.

**User Note:** AWS D1.8/D1.8M requires that all seismic force-resisting system welds are to be made with filler metals classified using AWS A5 standards that achieve the following mechanical properties:

**Filler Metal Classification Properties for Seismic Force-Resisting System Welds**

| Property | Classification | | |
|---|---|---|---|
| | 70 ksi (480 MPa) | 80 ksi (550 MPa) | 90 ksi (620 MPa) |
| Yield Strength, ksi (MPa) | 58 (400) min. | 68 (470) min. | 78 (540) min. |
| Tensile Strength, ksi (MPa) | 70 (480) min. | 80 (550) min. | 90 (620) min. |
| Elongation, % | 22 min. | 19 min. | 17 min. |
| CVN Toughness, ft-lb (J)[a] | 20 (27) min. @ 0°F (−18°C)[a] | | 25 (34) min. @ −20°F (−30°C) |

[a] Filler metals classified as meeting 20 ft-lbf (27 J) min. at a temperature lower than 0°F (−18°C) also meet this requirement.

In addition to the preceding requirements, AWS D1.8/D1.8M requires, unless otherwise exempted from testing, that all demand critical welds are to be made with filler metals receiving Heat Input Envelope Testing that achieve the following mechanical properties in the weld metal:

**Mechanical Properties for Demand Critical Welds**

| Property | Classification | | |
|---|---|---|---|
| | 70 ksi (480 MPa) | 80 ksi (550 MPa) | 90 ksi (620 MPa) |
| Yield Strength, ksi (MPa) | 58 (400) min. | 68 (470) min. | 78 (540) min. |
| Tensile Strength, ksi (MPa) | 70 (480) min. | 80 (550) min. | 90 (620) min. |
| Elongation (%) | 22 min. | 19 min. | 17 min. |
| CVN Toughness, ft-lb (J)[b, c] | 40 (54) min. @ 70°F (20°C) | | 40 (54) min. @ 50°F (10°C) |

[b] For LAST of +50°F (+10°C). For LAST less than +50°F (+10°C), see AWS D1.8/D1.8M clause 6.2.2.

[c] Tests conducted in accordance with AWS D1.8/D1.8M Annex A meeting 40 ft-lb (54 J) min. at a temperature lower than +70°F (+20°C) also meet this requirement.

# PROCESS ENCLOSURE HSS CONNECTION ANALYSIS SUMMARY

## RIGHT AND LEFT SIDE FRAMES - HSS6X6X1/2 CONNECTIONS

| Chord Member | | | | | | | Branch Member | | | | | | | | | | |
|---|---|---|---|---|---|---|---|---|---|---|---|---|---|---|---|---|---|
| Connection No. | Material | Member Size | Max Axial | Max M Left Side | Max M Right Side | Max My | Connection Description | Material | Branch Member Size | Orientation of Joining Member | Configuration | Max Axial | Max M In Plane | Max M Out of Plane | Load Case | STI Interaction Value | Remarks |
| Con-1 | ASTM 1085 | HSS6x6x1/2 | 17.67 kip | 28.10 in-kip | 28.10 in-kip | 4.25 in-kip | Roof Beam to Perimeter Beam | ASTM A1085 | HSS 6x6x5/16 | Out of Plane | Tee | 3.40 kip | 13.60 in-kip | 222.40 in-kip | 73 | **0.36** | |
| Con-2 | ASTM 1085 | HSS6x6x1/2 | 22.44 kip | 372.70 in-kip | 316.20 in-kip | 65.70 in-kip | End Wall Corner Column to Strut | ASTM A1085 | HSS 6x6x1/2 | In Plane | Tee | 5.74 kip | 637.60 in-kip | 22.10 in-kip | 73 | **0.79** | |
| Con-3 | ASTM 1085 | HSS8x6x1/2 | 29.80 kip | 54.00 in-kip | 582.90 in-kip | 11.50 in-kip | End Wall Middle Column to Base Frame | ASTM A1085 | HSS 6x6x1/2 | In Plane | Tee | 6.40 kip | 551.60 in-kip | 174.60 in-kip | 73 | **0.85** | |
| Con-4 | ASTM 1085 | HSS8x6x1/2 | 29.80 kip | 54.00 in-kip | 582.90 in-kip | 11.50 in-kip | Base Skid Beam Connection | ASTM A1085 | HSS8x6x1.2 | Out of Plane | Tee | 5.20 kip | 263.40 in-kip | 19.00 in-kip | 73 | **0.26** | |
| Con-5 | ASTM 1085 | HSS6x6x1/2 | 6.60 kip | 245.30 in-kip | 653.80 in-kip | 4.20 in-kip | End Wall Mid-Column to Strut | ASTM A1085 | Branch A HSS6x6x1/2 | In Plane | 4-Way | 2.30 kip | 338.60 in-kip | 45.30 in-kip | 73 | | |
| | | | | | | | | "" | Branch B HSS6x6x1/2 | In Plane | 4-Way | 12.60 kip | 557.60 in-kip | 63.90 in-kip | 73 | **0.87** | |

## FRONT AND BACK SIDES - HSS6X6X5/16 CONNECTIONS

| Chord Member | | | | | | | Branch Member | | | | | | | | | | |
|---|---|---|---|---|---|---|---|---|---|---|---|---|---|---|---|---|---|
| Connection No. | Material | Member Size | Max Axial | Max M Left Side | Max M Right Side | Max My | Connection Description | Material | Branch Member Size | Orientation of Joining Member | Configuration | Max Axial | Max M In Plane | Max M Out of Plane | Load Case | STI Interaction Value | Remarks |
| Con-6 | ASTM 1085 | HSS8x6x1/2 | 24.00 kip | 307.50 in-kip | 199.40 in-kip | 173.40 in-kip | Back Wall Mid Column to Base Frame | ASTM A1085 | Branch HSS6x6x5/16 | In Plane | Tee | 17.60 kip | 430.10 in-kip | 177.20 in-kip | 70 | **0.99** | |
| Con-7 | ASTM 1085 | HSS6x6x5/16 | 17.40 kip | 298.40 in-kip | 134.10 in-kip | 41.40 in-kip | Back Wall Mid Column to Strut | ASTM A1085 | Branch A HSS6x6x5/16 | In Plane | 4-Way | 2.20 kip | 273.70 in-kip | 25.70 in-kip | 70 | **0.83** | |
| | | | | | | | | ASTM A1085 | Branch B HSS6x6x5/16 | In Plane | 4-Way | 6.30 kip | 121.20 in-kip | 29.30 in-kip | | | |
| Con-8 | ASTM 1085 | HSS6x6x5/16 | 40.50 kip | 235.40 in-kip | 115.20 in-kip | 135.90 in-kip | Front Wall Mid Column to Strut | ASTM A1085 | Branch HSS6x6x5/16 | In Plane | Tee | 7.60 kip | 292.40 in-kip | 14.40 in-kip | 72 | **0.74** | |
| Con-9 | ASTM 1085 | HSS8x6x1/2 | 7.40 kip | 329.80 in-kip | 284.50 in-kip | 116.70 in-kip | Back Wall Mid Column to Base Frame | ASTM A1085 | Branch HSS6x6x5/16 | Out of Plane | Tee | 21.20 kip | 30.00 in-kip | 365.00 in-kip | 71 | **0.67** | |

**PROCESS ENCLOSURE CONNECTION 1**

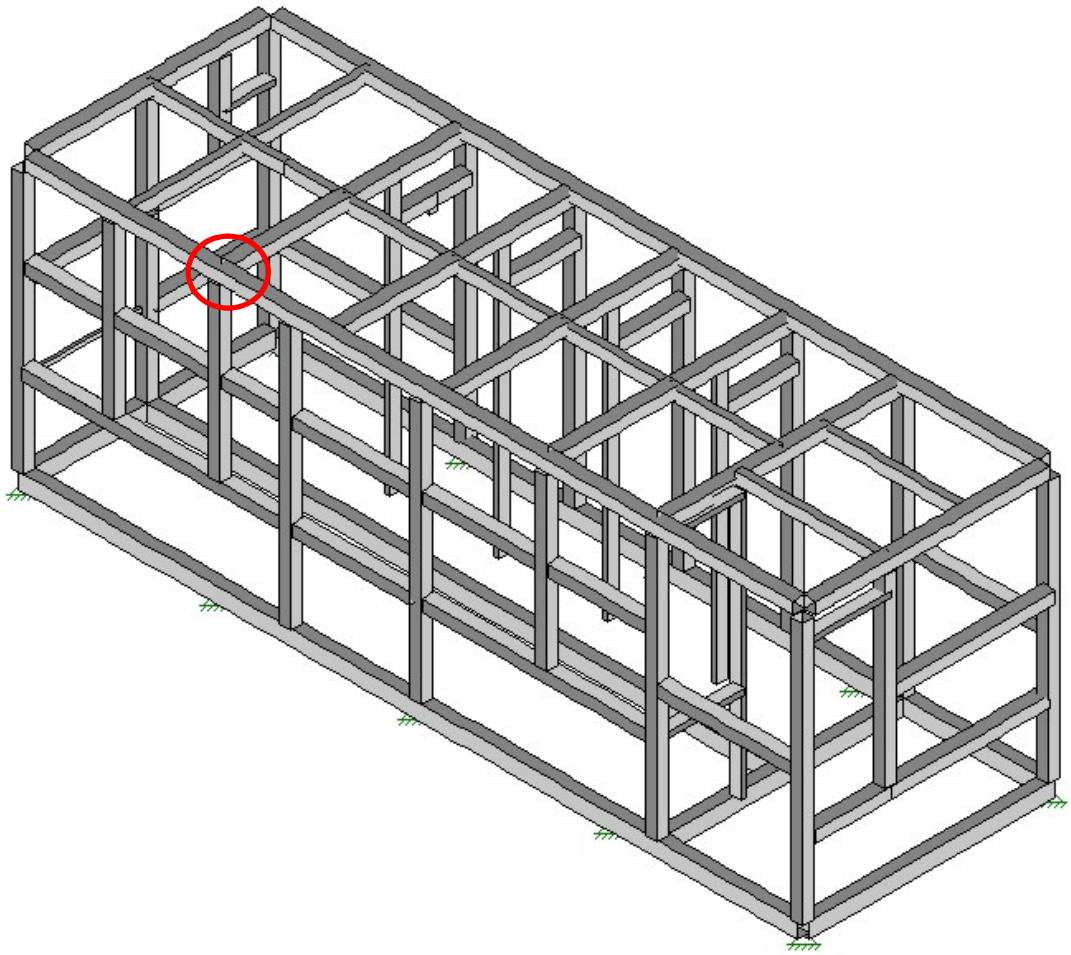

## Input Parameters

Chord | Plate | Branch A | Branch B | Branch C | Branch D | Gap/Overlap

**SECTION**

Material: A1085 HSS

Section: HSS6X6X1/2

Yield Stress $F_y$ (ksi): 50

Tensile Strength $F_u$ (ksi): 65

| | | | | | |
|---|---|---|---|---|---|
| Area $A_g$ ($in^2$) | 10.400 | Height h (in) | 6.00 | Width b (in) | 6.00 |
| | | Diameter D (in) | N/A | Thickness t (in) | 0.500 |
| | | Section Modulus $S_x$ ($in^3$) | 16.8000 | Plastic Modulus $Z_x$ ($in^3$) | 20.9000 |
| Vertical | Horizontal | Section Modulus $S_y$ ($in^3$) | 16.8000 | Plastic Modulus $Z_y$ ($in^3$) | 20.9000 |

**FACTORED LOADS - Axial: Tens.(+) Comp.(-), Moment: CW(+) CCW (-)**

| | | | |
|---|---|---|---|
| Axial Left (kip) | 17.67 | Axial Right(kip) | 17.67 |
| Moment Left (kip-in) | 28.11 | Moment Right(kip-in) | -28.11 |
| Point Load (kip) | | | |

## Schematic

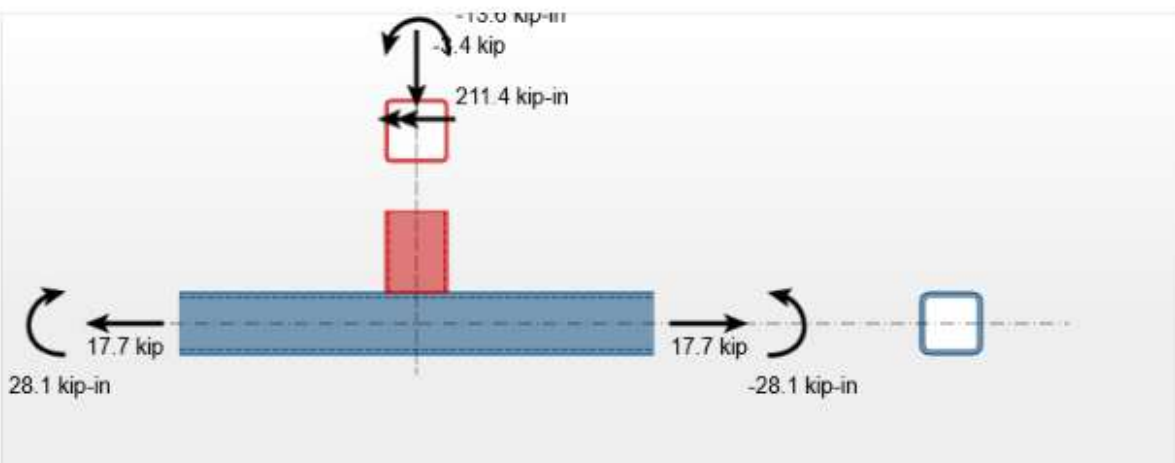

## Input Parameters

Chord | Plate | Branch A | Branch B | Branch C | Branch D | Gap/Overlap

**SECTION**

Material: A1085 HSS

Section: HSS6X6X5/16

Yield Stress $F_y$ (ksi): 50

Tensile Strength $F_u$ (ksi): 65

Area $A_g$ ($in^2$): 6.870

Height h (in): 6.00

Width b (in): 6.00

Diameter D (in): N/A

Thickness t (in): 0.313

Section Modulus $S_x$ ($in^3$): 12.1000

Plastic Modulus $Z_x$ ($in^3$): 14.5000

Vertical | Horizontal

Section Modulus $S_y$ ($in^3$): 12.1000

Plastic Modulus $Z_y$ ($in^3$): 14.5000

**GEOMETRY**

Branch Angle θ (deg): 90

**FACTORED LOADS - Axial: Tens.(+) Comp.(-), Moment: CW(+) CCW (-)**

Axial (kip): -3.4

In-Plane Moment (kip-in): -13.61

Out-of-Plane Moment (kip-in): 211.4

## Schematic

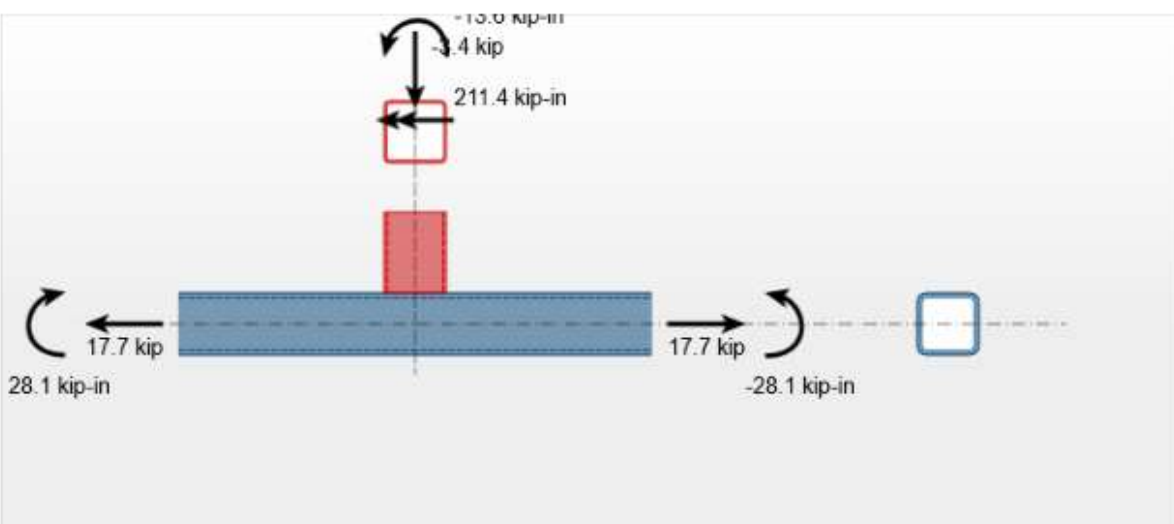

## Results

**Connection OK**

Branch A ----------
Total Factored Axial Load Pr = -3.4 kip
--Y-Connection - 100%
----Factored Axial Load (Y) Pr = -3.4 kip
----Factored Axial Load Capacity (Y) Pc = 309.2 kip
Axial Load Interaction = 0.011
Factored In-Plane Moment Mrip = -13.6 kip-in
Factored In-Plane Moment Capacity Mcip = 652.5 kip-in
In-Plane Moment Interaction = 0.021
Factored Out-of-Plane Moment Mrop = 211.4 kip-in
Factored Out-of-Plane Moment Capacity Mcop = 652.5 kip-in
Out-of-Plane Moment Interaction = 0.324
Axial/Moment INTERACTION = 0.356

OVERALL INTERACTION -- 0.356

# PROCESS ENCLOSURE CONNECTION 2

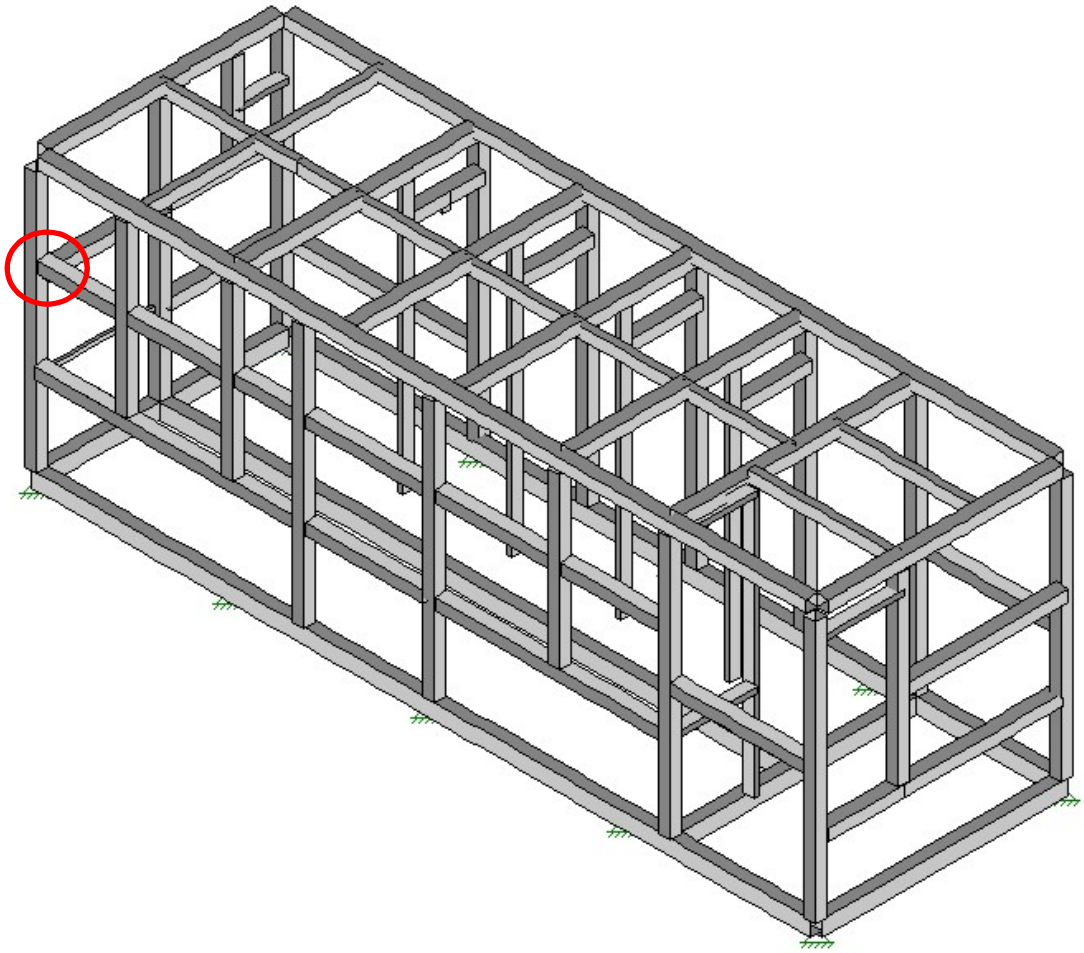

Member Section Forces (By Combination)

Sections | Maximums | End Reactions

| | L... | Member Label | S... | Axial[k] | y Shea... | z Shea... | Torque[k-in] | y-y Moment[k-in] | z-z Moment[k-in] |
|---|---|---|---|---|---|---|---|---|---|
| 1 | 73 | M222A | 1 | -5.736 | 22.576 | .518 | 11.958 | -22.078 | 637.586 |
| 2 | | | 2 | -5.736 | 22.56 | .517 | 11.958 | -18.794 | 494.353 |
| 3 | | | 3 | -5.736 | 22.525 | .517 | 11.958 | -15.512 | 351.264 |
| 4 | | | 4 | -5.736 | 22.473 | .516 | 11.958 | -12.234 | 208.46 |
| 5 | | | 5 | -5.736 | 22.413 | .516 | 11.958 | -8.959 | 66.016 |
| 6 | | | 6 | -6.785 | 22.176 | .243 | 7.287 | -8.839 | -65.953 |
| 7 | | | 7 | -6.785 | 22.125 | .242 | 7.287 | -7.299 | -206.53 |
| 8 | | | 8 | -6.785 | 22.092 | .242 | 7.287 | -5.761 | -346.835 |
| 9 | | | 9 | -6.785 | 22.082 | .242 | 7.287 | -4.225 | -486.994 |
| 10 | | | 10 | -6.542 | 26.445 | .161 | -7.582 | -2.367 | -652.441 |

## Input Parameters

Chord | Plate | Branch A | Branch B | Branch C | Branch D | Gap/Overlap

**SECTION**

Material: A1085 HSS

Section: HSS6X6X1/2

Yield Stress $F_y$ (ksi): 50

Tensile Strength $F_u$ (ksi): 65

| | | | | | |
|---|---|---|---|---|---|
| Area $A_g$ ($in^2$) | 10.400 | Height h (in) | 6.00 | Width b (in) | 6.00 |
| | | Diameter D (in) | N/A | Thickness t (in) | 0.500 |
| | | Section Modulus $S_x$ ($in^3$) | 16.8000 | Plastic Modulus $Z_x$ ($in^3$) | 20.9000 |
| Vertical | Horizontal | Section Modulus $S_y$ ($in^3$) | 16.8000 | Plastic Modulus $Z_y$ ($in^3$) | 20.9000 |

**FACTORED LOADS - Axial: Tens.(+) Comp.(-), Moment: CW(+) CCW (-)**

| | | | |
|---|---|---|---|
| Axial Left (kip) | -22.44 | Axial Right(kip) | -22.44 |
| Moment Left (kip-in) | -316.2 | Moment Right(kip-in) | -372.7 |
| Point Load (kip) | | | |

## Schematic

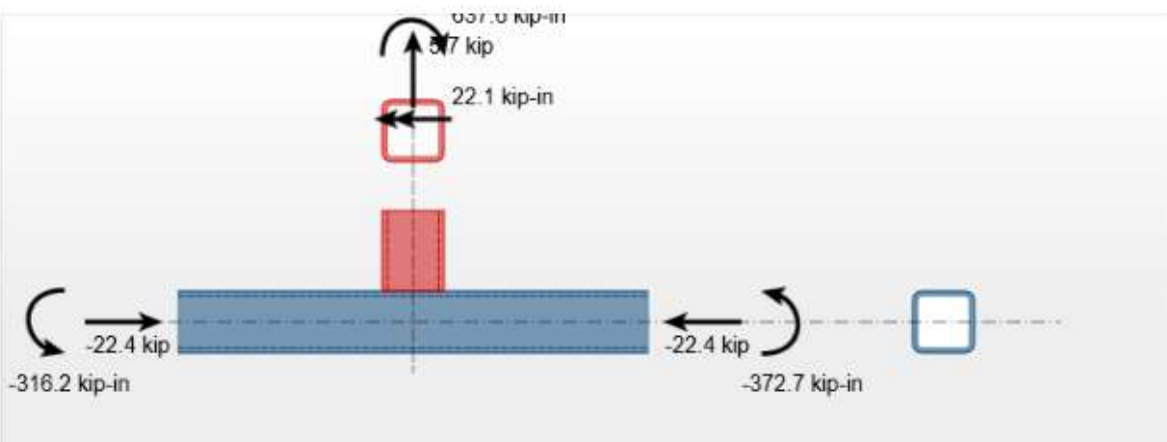

## Input Parameters

Chord | Plate | Branch A | Branch B | Branch C | Branch D | Gap/Overlap

**SECTION**

Material: A1085 HSS

Section: HSS6X6X1/2

Yield Stress $F_y$ (ksi): 50

Tensile Strength $F_u$ (ksi): 65

| | | | | | |
|---|---|---|---|---|---|
| Area $A_g$ ($in^2$) | 10.400 | Height h (in) | 6.00 | Width b (in) | 6.00 |
| | | Diameter D (in) | N/A | Thickness t (in) | 0.500 |
| | | Section Modulus $S_x$ ($in^3$) | 16.8000 | Plastic Modulus $Z_x$ ($in^3$) | 20.9000 |
| Vertical | Horizontal | Section Modulus $S_y$ ($in^3$) | 16.8000 | Plastic Modulus $Z_y$ ($in^3$) | 20.9000 |

**GEOMETRY**

Branch Angle θ (deg): 90

**FACTORED LOADS - Axial: Tens.(+) Comp.(-), Moment: CW(+) CCW (-)**

Axial (kip): 5.74

In-Plane Moment (kip-in): 637.6

Out-of-Plane Moment (kip-in): 22.1

## Schematic

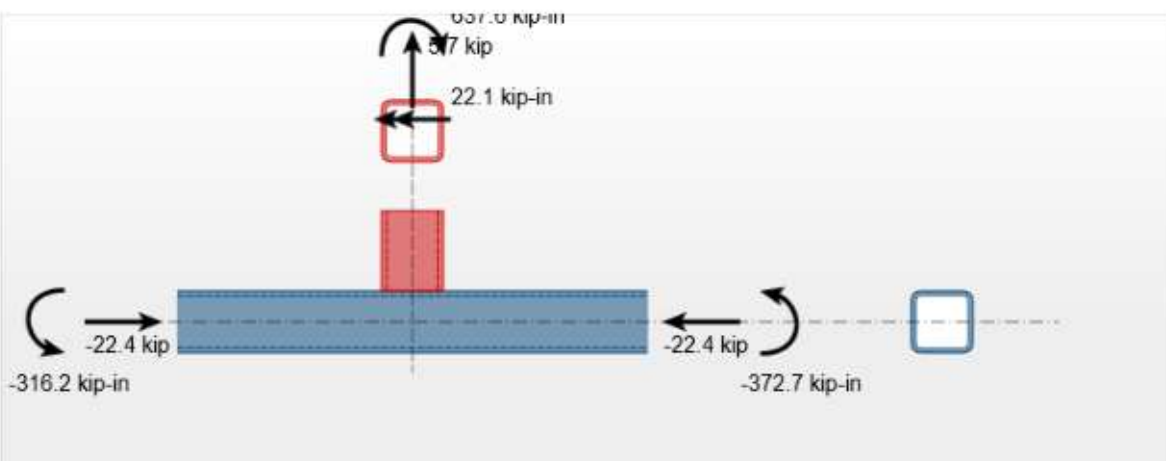

## Results

**Connection OK**

Branch A ----------
Total Factored Axial Load Pr = 5.7 kip
--Y-Connection - 100%
----Factored Axial Load (Y) Pr = 5.7 kip
----Factored Axial Load Capacity (Y) Pc = 468 kip
Axial Load Interaction = 0.012
Factored In-Plane Moment Mrip = 637.6 kip-in
Factored In-Plane Moment Capacity Mcip = 850.2 kip-in
In-Plane Moment Interaction = 0.75
Factored Out-of-Plane Moment Mrop = 22.1 kip-in
Factored Out-of-Plane Moment Capacity Mcop = 884.8 kip-in
Out-of-Plane Moment Interaction = 0.025
Axial/Moment INTERACTION = 0.787

OVERALL INTERACTION -- 0.787

# CONNECTION 3

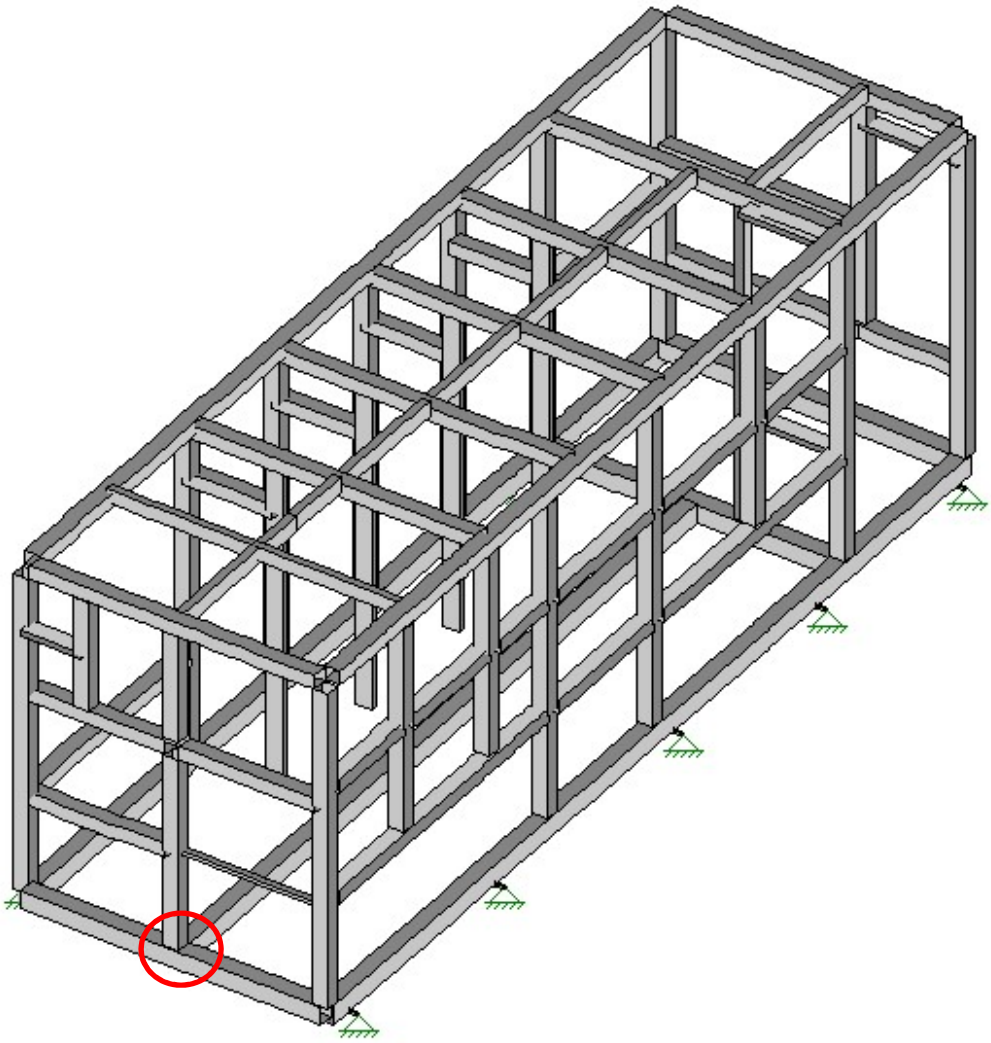

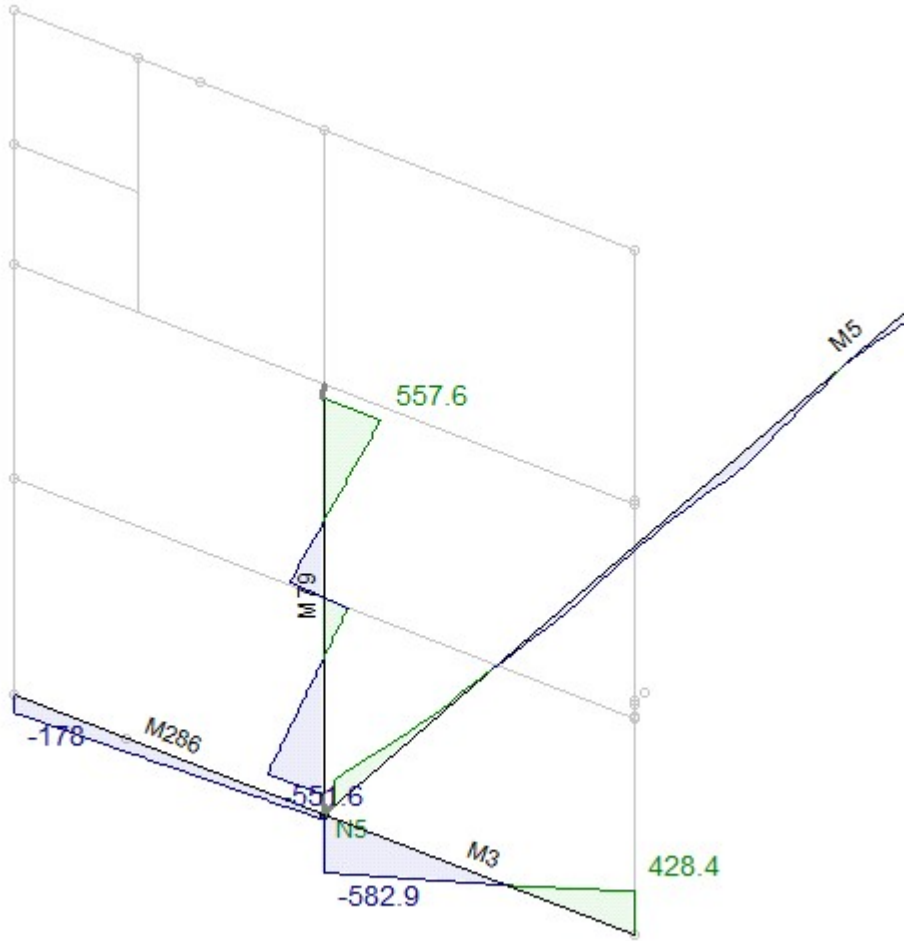


Member Section Forces (By Combination)

Sections | Maximums | End Reactions

| | L... | Member Label | S... | Axial[k] | y Shea... | z Shea... | Torque[k-in] | y-y Moment[k-in] | z-z Moment[k-in] |
|---|---|---|---|---|---|---|---|---|---|
| 541 | 73 | M79 | 1 | 6.379 | -19.353 | 4.365 | -7.838 | -174.55 | -551.558 |
| 542 | | | 2 | 6.337 | -19.379 | 4.374 | -7.838 | -134.683 | -374.837 |
| 543 | | | 3 | 6.265 | -19.388 | 4.377 | -7.838 | -94.756 | -197.952 |
| 544 | | | 4 | 6.185 | -19.394 | 4.382 | -7.838 | -54.787 | -20.985 |
| 545 | | | 5 | 6.123 | -19.391 | 4.383 | -7.838 | -14.795 | 155.981 |
| 546 | | | 6 | -12.347 | -21.946 | 2.814 | -6.63 | -38.79 | -243.704 |
| 547 | | | 7 | -12.409 | -21.936 | 2.812 | -6.63 | -13.123 | -43.482 |
| 548 | | | 8 | -12.487 | -21.94 | 2.811 | -6.63 | 12.531 | 156.699 |
| 549 | | | 9 | -12.556 | -21.955 | 2.813 | -6.63 | 38.194 | 357 |
| 550 | | | 10 | -12.596 | -22.007 | 2.818 | -6.63 | 63.892 | 557.638 |

Member Section Forces (By Combination)

Sections | Maximums | End Reactions

| | L... | Member Label | S... | Axial[k] | y Shea... | z Shea... | Torque[k-in] | y-y Moment[k-in] | z-z Moment[k-in] |
|---|---|---|---|---|---|---|---|---|---|
| 21 | 73 | M3 | 1 | 30.087 | 16.698 | -.433 | -89.52 | 41.349 | 428.355 |
| 22 | | | 2 | 30.086 | 16.715 | -.438 | -89.52 | 38.306 | 311.261 |
| 23 | | | 3 | 30.085 | 16.718 | -.443 | -89.52 | 35.224 | 194.047 |
| 24 | | | 4 | 30.084 | 16.694 | -.447 | -89.52 | 32.109 | 76.883 |
| 25 | | | 5 | 29.907 | 15.721 | -.456 | -86.765 | 28.317 | -34.661 |
| 26 | | | 6 | 29.905 | 15.661 | -.46 | -86.765 | 25.107 | -144.711 |
| 27 | | | 7 | 29.903 | 15.596 | -.463 | -86.765 | 21.87 | -254.304 |
| 28 | | | 8 | 29.902 | 15.536 | -.466 | -86.765 | 18.607 | -363.429 |
| 29 | | | 9 | 29.901 | 15.488 | -.469 | -86.765 | 15.324 | -472.141 |
| 30 | | | 10 | 29.789 | 15.886 | -.456 | -88.104 | 11.497 | -582.938 |

Member Section Forces (By Combination)

Sections | Maximums | End Reactions

| | L... | Member Label | S... | Axial[k] | y Shea... | z Shea... | Torque[k-in] | y-y Moment[k-in] | z-z Moment[k-in] |
|---|---|---|---|---|---|---|---|---|---|
| 841 | 73 | M286 | 1 | 8.676 | 2.101 | .323 | 5.507 | -4.976 | -54.023 |
| 842 | | | 2 | 8.676 | 2.096 | .323 | 5.507 | -2.707 | -68.747 |
| 843 | | | 3 | 8.675 | 2.076 | .323 | 5.507 | -.441 | -83.395 |
| 844 | | | 4 | 8.673 | 2.039 | .322 | 5.507 | 1.822 | -97.836 |
| 845 | | | 5 | 8.671 | 1.993 | .322 | 5.507 | 4.082 | -111.978 |
| 846 | | | 6 | 8.67 | 1.945 | .321 | 5.507 | 6.338 | -125.787 |
| 847 | | | 7 | 8.668 | 1.888 | .32 | 5.507 | 8.59 | -139.252 |
| 848 | | | 8 | 8.667 | 1.851 | .319 | 5.507 | 10.832 | -152.36 |
| 849 | | | 9 | 8.665 | 1.825 | .319 | 5.507 | 13.071 | -165.244 |
| 850 | | | 10 | 8.665 | 1.823 | .319 | 5.507 | 15.308 | -178.034 |

Member Section Forces (By Combination)

Sections | Maximums | End Reactions

| | L... | Member Label | S... | Axial[k] | y Shea... | z Shea... | Torque[k-in] | y-y Moment[k-in] | z-z Moment[k-in] |
|---|---|---|---|---|---|---|---|---|---|
| 41 | 73 | M5 | 1 | -5.146 | 7.393 | -1.768 | 100.055 | 19.006 | 263.44 |
| 42 | | | 2 | -5.618 | 2.757 | 2.535 | 100.055 | -13.318 | 36.222 |
| 43 | | | 3 | -5.97 | -1.59 | 4.308 | 77.288 | 13.716 | -72.789 |
| 44 | | | 4 | -6.461 | 3.966 | -.843 | 45.49 | -24.441 | -74.022 |
| 45 | | | 5 | -6.495 | -5.13 | -.858 | 5.55 | -13.824 | -63.964 |
| 46 | | | 6 | -6.716 | 4.581 | 1.087 | 5.55 | .154 | -104.222 |
| 47 | | | 7 | -7.016 | 4.859 | 7.209 | -40.408 | -11.311 | -35.965 |
| 48 | | | 8 | -6.966 | -3.831 | 2.663 | -91.441 | -8.492 | -156.602 |
| 49 | | | 9 | -7.12 | -.873 | -2.774 | -131.337 | 9.232 | -66.758 |
| 50 | | | 10 | -5.391 | -12.469 | 1.551 | 77.534 | 9.734 | 284.233 |

## Input Parameters

Chord | Plate | Branch A | Branch B | Branch C | Branch D | Gap/Overlap

**SECTION**

Material: A1085 HSS

Section: HSS8X6X1/2

Yield Stress $F_y$ (ksi): 50

Tensile Strength $F_u$ (ksi): 65

| | | | | | |
|---|---|---|---|---|---|
| Area $A_g$ ($in^2$) | 12.400 | Height h (in) | 8.00 | Width b (in) | 6.00 |
| | | Diameter D (in) | N/A | Thickness t (in) | 0.500 |
| | | Section Modulus $S_x$ ($in^3$) | 25.8000 | Plastic Modulus $Z_x$ ($in^3$) | 32.2000 |
| Vertical | Horizontal | Section Modulus $S_y$ ($in^3$) | 21.9000 | Plastic Modulus $Z_y$ ($in^3$) | 26.4000 |

**FACTORED LOADS - Axial: Tens.(+) Comp.(-), Moment: CW(+) CCW (-)**

| | | | |
|---|---|---|---|
| Axial Left (kip) | -8.8 | Axial Right(kip) | -29.8 |
| Moment Left (kip-in) | 54 | Moment Right(kip-in) | -582.9 |
| Point Load (kip) | | | |

## Schematic

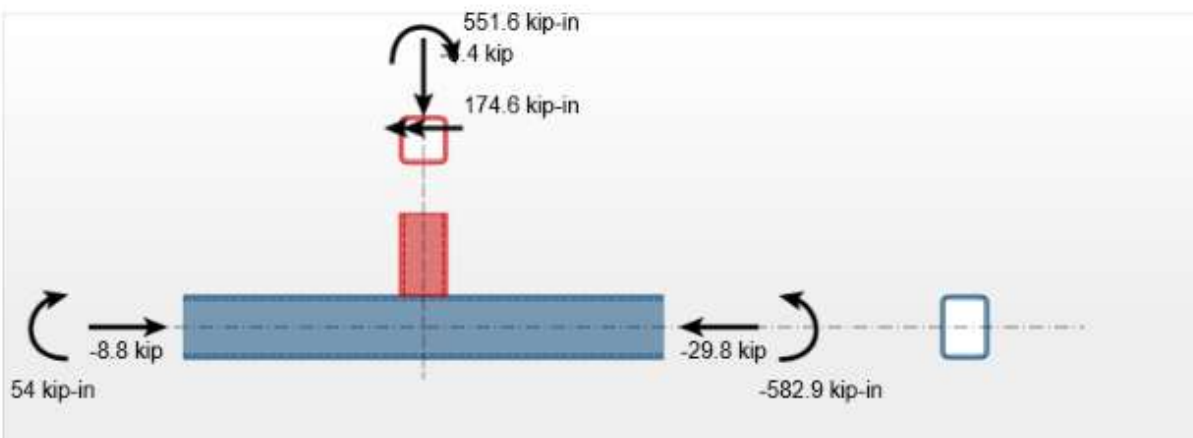

## Input Parameters

Chord | Plate | Branch A | Branch B | Branch C | Branch D | Gap/Overlap

**SECTION**

Material: A1085 HSS

Section: HSS6X6X1/2

Yield Stress $F_y$ (ksi): 50

Tensile Strength $F_u$ (ksi): 65

| | | | | | |
|---|---|---|---|---|---|
| Area $A_g$ ($in^2$) | 10.400 | Height h (in) | 6.00 | Width b (in) | 6.00 |
| | | Diameter D (in) | N/A | Thickness t (in) | 0.500 |
| | | Section Modulus $S_x$ ($in^3$) | 16.8000 | Plastic Modulus $Z_x$ ($in^3$) | 20.9000 |
| Vertical / Horizontal | | Section Modulus $S_y$ ($in^3$) | 16.8000 | Plastic Modulus $Z_y$ ($in^3$) | 20.9000 |

**GEOMETRY**

Branch Angle θ (deg): 90

**FACTORED LOADS - Axial: Tens.(+) Comp.(-), Moment: CW(+) CCW (-)**

Axial (kip): -6.4

In-Plane Moment (kip-in): 551.6

Out-of-Plane Moment (kip-in): 174.6

## Schematic

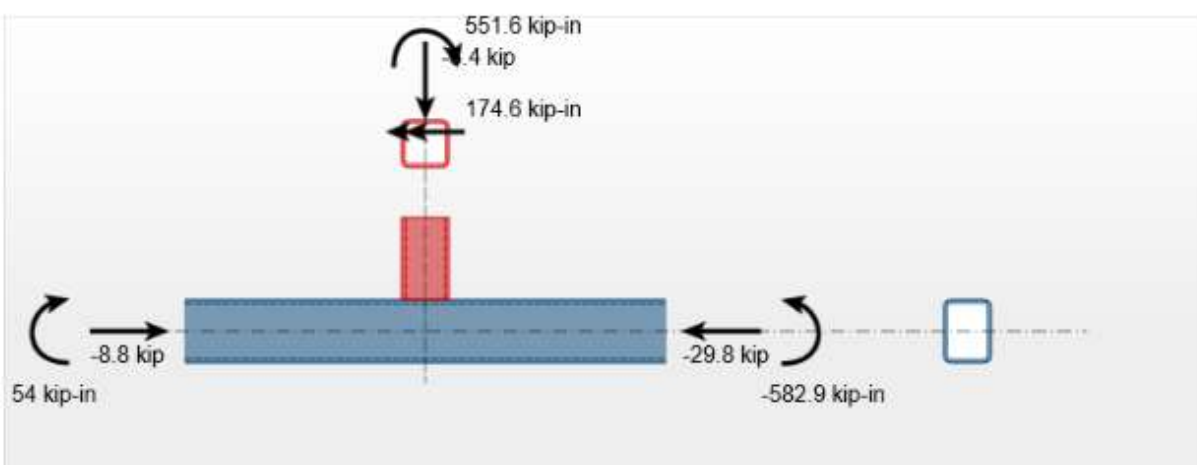

## Results

**Connection OK**

Branch A ----------
Total Factored Axial Load Pr = -6.4 kip
--Y-Connection - 100%
----Factored Axial Load (Y) Pr = -6.4 kip
----Factored Axial Load Capacity (Y) Pc = 468 kip
Axial Load Interaction = 0.014
Factored In-Plane Moment Mrip = 551.6 kip-in
Factored In-Plane Moment Capacity Mcip = 850.2 kip-in
In-Plane Moment Interaction = 0.649
Factored Out-of-Plane Moment Mrop = 174.6 kip-in
Factored Out-of-Plane Moment Capacity Mcop = 940.5 kip-in
Out-of-Plane Moment Interaction = 0.186
Axial/Moment INTERACTION = 0.848

OVERALL INTERACTION -- 0.848

# CONNECTION 4

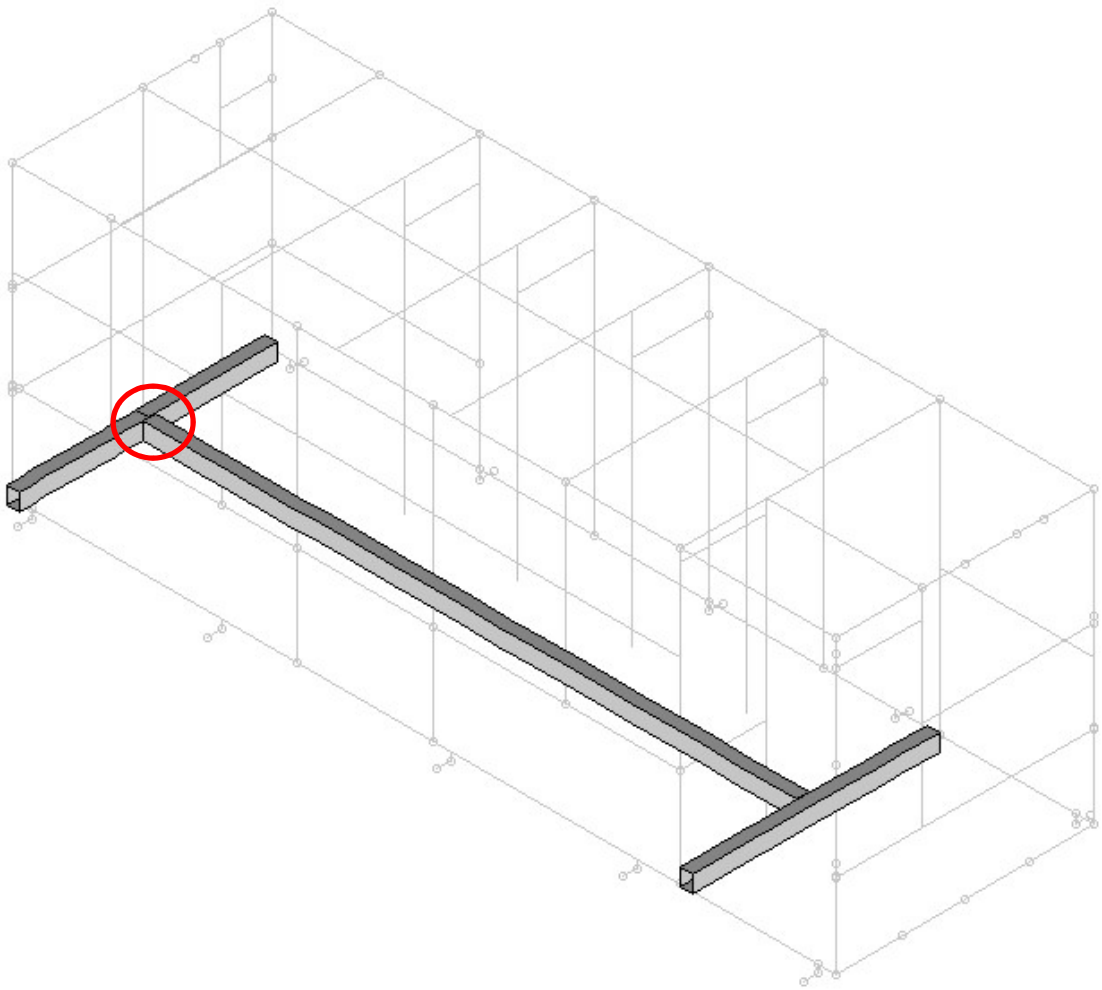

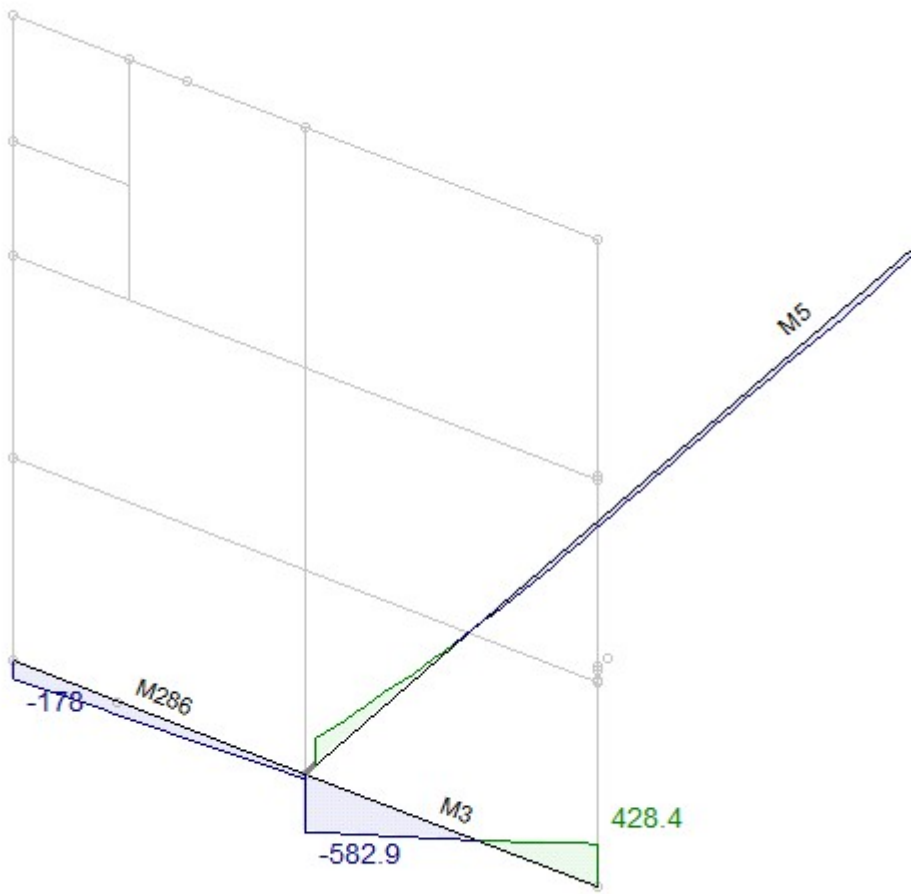
M5
M286
-178
M3
428.4
-582.9

Member Section Forces (By Combination)

Sections | Maximums | End Reactions

| | L... | Member Label | S... | Axial[k] | y Shea... | z Shea... | Torque[k-in] | y-y Moment[k-in] | z-z Moment[k-in] |
|---|---|---|---|---|---|---|---|---|---|
| 21 | 73 | M3 | 1 | 30.087 | 16.698 | -.433 | -89.52 | 41.349 | 428.355 |
| 22 | | | 2 | 30.086 | 16.715 | -.438 | -89.52 | 38.306 | 311.261 |
| 23 | | | 3 | 30.085 | 16.718 | -.443 | -89.52 | 35.224 | 194.047 |
| 24 | | | 4 | 30.084 | 16.694 | -.447 | -89.52 | 32.109 | 76.883 |
| 25 | | | 5 | 29.907 | 15.721 | -.456 | -86.765 | 28.317 | -34.661 |
| 26 | | | 6 | 29.905 | 15.661 | -.46 | -86.765 | 25.107 | -144.711 |
| 27 | | | 7 | 29.903 | 15.596 | -.463 | -86.765 | 21.87 | -254.304 |
| 28 | | | 8 | 29.902 | 15.536 | -.466 | -86.765 | 18.607 | -363.429 |
| 29 | | | 9 | 29.901 | 15.488 | -.469 | -86.765 | 15.324 | -472.141 |
| 30 | | | 10 | 29.789 | 15.886 | -.456 | -88.104 | 11.497 | -582.938 |

Member Section Forces (By Combination)

Sections | Maximums | End Reactions

| | L... | Member Label | S... | Axial[k] | y Shea... | z Shea... | Torque[k-in] | y-y Moment[k-in] | z-z Moment[k-in] |
|---|---|---|---|---|---|---|---|---|---|
| 841 | 73 | M286 | 1 | 8.676 | 2.101 | .323 | 5.507 | -4.976 | -54.023 |
| 842 | | | 2 | 8.676 | 2.096 | .323 | 5.507 | -2.707 | -68.747 |
| 843 | | | 3 | 8.675 | 2.076 | .323 | 5.507 | -.441 | -83.395 |
| 844 | | | 4 | 8.673 | 2.039 | .322 | 5.507 | 1.822 | -97.836 |
| 845 | | | 5 | 8.671 | 1.993 | .322 | 5.507 | 4.082 | -111.978 |
| 846 | | | 6 | 8.67 | 1.945 | .321 | 5.507 | 6.338 | -125.787 |
| 847 | | | 7 | 8.668 | 1.888 | .32 | 5.507 | 8.59 | -139.252 |
| 848 | | | 8 | 8.667 | 1.851 | .319 | 5.507 | 10.832 | -152.36 |
| 849 | | | 9 | 8.665 | 1.825 | .319 | 5.507 | 13.071 | -165.244 |
| 850 | | | 10 | 8.665 | 1.823 | .319 | 5.507 | 15.308 | -178.034 |

Member Section Forces (By Combination)

Sections | Maximums | End Reactions

| | L... | Member Label | S... | Axial[k] | y Shea... | z Shea... | Torque[k-in] | y-y Moment[k-in] | z-z Moment[k-in] |
|---|---|---|---|---|---|---|---|---|---|
| 41 | 73 | M5 | 1 | -5.146 | 7.393 | -1.768 | 100.055 | 19.006 | 263.44 |
| 42 | | | 2 | -5.618 | 2.757 | 2.535 | 100.055 | -13.318 | 36.222 |
| 43 | | | 3 | -5.97 | -1.59 | 4.308 | 77.288 | 13.716 | -72.789 |
| 44 | | | 4 | -6.461 | 3.966 | -.843 | 45.49 | -24.441 | -74.022 |
| 45 | | | 5 | -6.495 | -5.13 | -.858 | 5.55 | -13.824 | -63.964 |
| 46 | | | 6 | -6.716 | 4.581 | 1.087 | 5.55 | .154 | -104.222 |
| 47 | | | 7 | -7.016 | 4.859 | 7.209 | -40.408 | -11.311 | -35.965 |
| 48 | | | 8 | -6.966 | -3.831 | 2.663 | -91.441 | -8.492 | -156.602 |
| 49 | | | 9 | -7.12 | -.873 | -2.774 | -131.337 | 9.232 | -66.758 |
| 50 | | | 10 | -5.391 | -12.469 | 1.551 | 77.534 | 9.734 | 284.233 |

## Input Parameters

Chord | Plate | Branch A | Branch B | Branch C | Branch D | Gap/Overlap

**SECTION**

Material: A1085 HSS

Section: HSS8X6X1/2

Yield Stress $F_y$ (ksi): 50

Tensile Strength $F_u$ (ksi): 65

Area $A_g$ ($in^2$): 12.400

Height h (in): 8.00

Width b (in): 6.00

Diameter D (in): N/A

Thickness t (in): 0.500

Section Modulus $S_x$ ($in^3$): 25.8000

Plastic Modulus $Z_x$ ($in^3$): 32.2000

Vertical | Horizontal

Section Modulus $S_y$ ($in^3$): 21.9000

Plastic Modulus $Z_y$ ($in^3$): 26.4000

**FACTORED LOADS - Axial: Tens.(+) Comp.(-), Moment: CW(+) CCW (-)**

Axial Left (kip): -8.8

Moment Left (kip-in): 54

Point Load (kip):

Axial Right(kip): -29.8

Moment Right(kip-in): -582.9

## Schematic

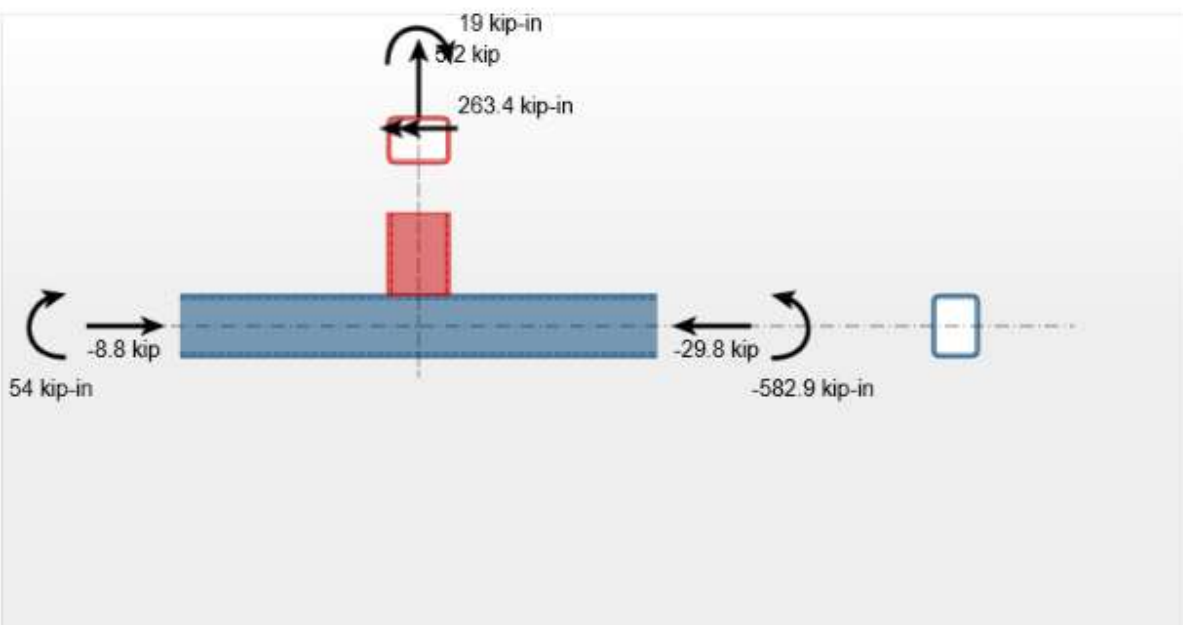

## Input Parameters

Chord | Plate | Branch A | Branch B | Branch C | Branch D | Gap/Overlap

**SECTION**

Material: A1085 HSS

Yield Stress $F_y$ (ksi): 50

Tensile Strength $F_u$ (ksi): 65

Section: HSS8X6X1/2

| | | | | | |
|---|---|---|---|---|---|
| Area $A_g$ ($in^2$) | 12.400 | Height h (in) | 8.00 | Width b (in) | 6.00 |
| | | Diameter D (in) | N/A | Thickness t (in) | 0.500 |
| | | Section Modulus $S_x$ ($in^3$) | 25.8000 | Plastic Modulus $Z_x$ ($in^3$) | 32.2000 |
| Vertical | Horizontal | Section Modulus $S_y$ ($in^3$) | 21.9000 | Plastic Modulus $Z_y$ ($in^3$) | 26.4000 |

**GEOMETRY**

Branch Angle θ (deg): 90

**FACTORED LOADS - Axial: Tens.(+) Comp.(-), Moment: CW(+) CCW (-)**

Axial (kip): 5.2

In-Plane Moment (kip-in): 19

Out-of-Plane Moment (kip-in): 263.4

## Schematic

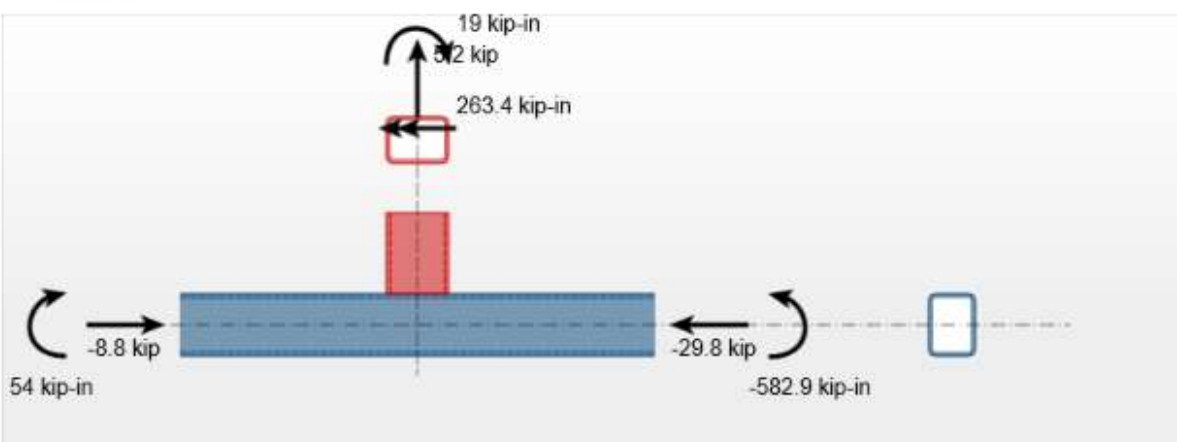

## Results

**Connection OK**

Branch A ----------
Total Factored Axial Load Pr = 5.2 kip
--Y-Connection - 100%
----Factored Axial Load (Y) Pr = 5.2 kip
----Factored Axial Load Capacity (Y) Pc = 558 kip
Axial Load Interaction = 0.009
Factored In-Plane Moment Mrip = 19 kip-in
Factored In-Plane Moment Capacity Mcip = 1339.4 kip-in
In-Plane Moment Interaction = 0.014
Factored Out-of-Plane Moment Mrop = 263.4 kip-in
Factored Out-of-Plane Moment Capacity Mcop = 1116.5 kip-in
Out-of-Plane Moment Interaction = 0.236
Axial/Moment INTERACTION = 0.259

OVERALL INTERACTION -- 0.259

# CONNECTION 5

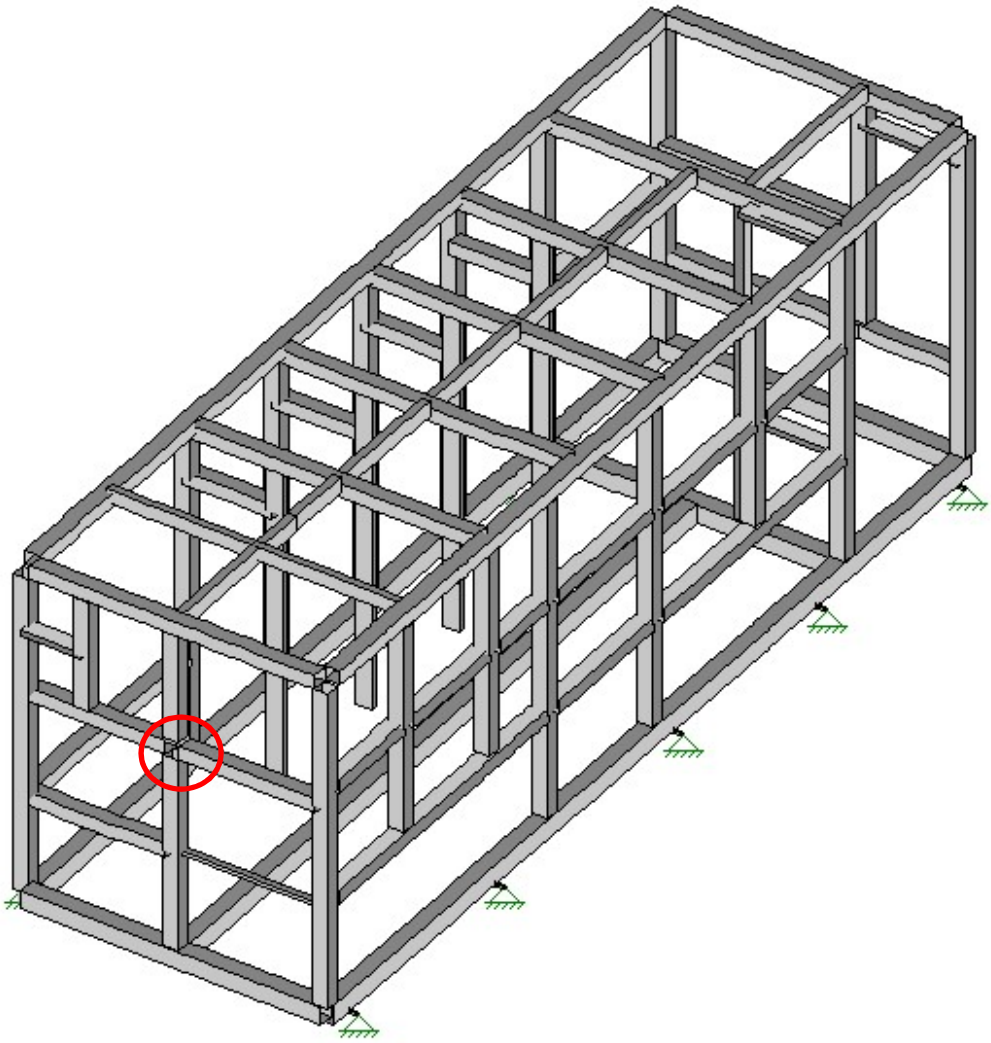

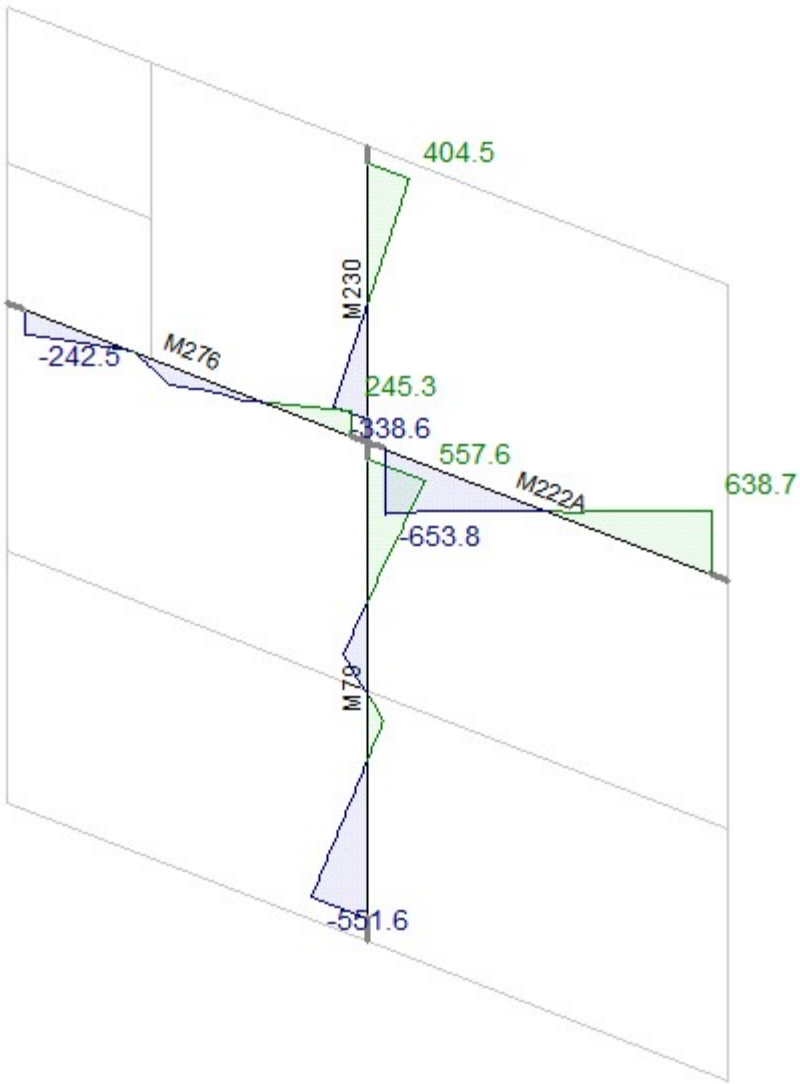


Member Section Forces (By Combination)

Sections | Maximums | End Reactions

| | L... | Member Label | S... | Axial[k] | y Shea... | z Shea... | Torque[k-in] | y-y Moment[k-in] | z-z Moment[k-in] |
|---|---|---|---|---|---|---|---|---|---|
| 761 | 73 | M222A | 1 | -5.801 | 22.618 | .528 | 12.054 | -22.468 | 638.67 |
| 762 | | | 2 | -5.801 | 22.602 | .527 | 12.054 | -19.119 | 495.169 |
| 763 | | | 3 | -5.801 | 22.567 | .527 | 12.054 | -15.774 | 351.813 |
| 764 | | | 4 | -5.801 | 22.515 | .526 | 12.054 | -12.431 | 208.742 |
| 765 | | | 5 | -5.801 | 22.455 | .526 | 12.054 | -9.092 | 66.033 |
| 766 | | | 6 | -6.851 | 22.22 | .252 | 7.369 | -8.914 | -66.184 |
| 767 | | | 7 | -6.851 | 22.168 | .252 | 7.369 | -7.312 | -207.038 |
| 768 | | | 8 | -6.851 | 22.135 | .252 | 7.369 | -5.713 | -347.62 |
| 769 | | | 9 | -6.851 | 22.125 | .252 | 7.369 | -4.114 | -488.057 |
| 770 | | | 10 | -6.608 | 26.494 | .171 | -7.517 | -2.193 | -653.817 |

Member Section Forces (By Combination)

Sections | Maximums | End Reactions

| | L... | Member Label | S... | Axial[k] | y Shea... | z Shea... | Torque[k-in] | y-y Moment[k-in] | z-z Moment[k-in] |
|---|---|---|---|---|---|---|---|---|---|
| 831 | 73 | M276 | 1 | -.768 | 16.184 | 3.727 | -31.703 | -4.232 | 245.259 |
| 832 | | | 2 | -.768 | 16.172 | 3.727 | -31.703 | 19.424 | 142.556 |
| 833 | | | 3 | -.768 | 16.144 | 3.727 | -31.703 | 43.081 | 39.981 |
| 834 | | | 4 | -.768 | 16.108 | 3.727 | -31.703 | 66.739 | -62.382 |
| 835 | | | 5 | -1.355 | 13.725 | -2.118 | 28.499 | 46.341 | -106.142 |
| 836 | | | 6 | -1.355 | 13.687 | -2.117 | 28.499 | 32.9 | -193.144 |
| 837 | | | 7 | -14.221 | 13.205 | -2.624 | 37.507 | 35.56 | 8.005 |
| 838 | | | 8 | -14.221 | 13.168 | -2.622 | 37.507 | 18.909 | -75.703 |
| 839 | | | 9 | -14.221 | 13.139 | -2.621 | 37.507 | 2.268 | -159.196 |
| 840 | | | 10 | -14.221 | 13.122 | -2.622 | 37.507 | -14.373 | -242.54 |

Member Section Forces (By Combination)

Sections | Maximums | End Reactions

| | L... | Member Label | S... | Axial[k] | y Shea... | z Shea... | Torque[k-in] | y-y Moment[k-in] | z-z Moment[k-in] |
|---|---|---|---|---|---|---|---|---|---|
| 781 | 73 | M230 | 1 | -2.299 | -16.206 | -.719 | 7.103 | 45.284 | -338.627 |
| 782 | | | 2 | -2.312 | -16.203 | -.719 | 7.103 | 41.619 | -256.04 |
| 783 | | | 3 | -2.34 | -16.2 | -.719 | 7.103 | 37.955 | -173.466 |
| 784 | | | 4 | -2.382 | -16.199 | -.718 | 7.103 | 34.294 | -90.902 |
| 785 | | | 5 | -2.432 | -16.198 | -.718 | 7.103 | 30.633 | -8.344 |
| 786 | | | 6 | -2.481 | -16.198 | -.718 | 7.103 | 26.975 | 74.211 |
| 787 | | | 7 | -2.531 | -16.198 | -.718 | 7.103 | 23.317 | 156.769 |
| 788 | | | 8 | -2.573 | -16.2 | -.717 | 7.103 | 19.661 | 239.335 |
| 789 | | | 9 | -2.601 | -16.203 | -.717 | 7.103 | 16.006 | 321.914 |
| 790 | | | 10 | -2.614 | -16.208 | -.717 | 7.103 | 12.352 | 404.511 |

Member Section Forces (By Combination)

Sections | Maximums | End Reactions

| | L... | Member Label | S... | Axial[k] | y Shea... | z Shea... | Torque[k-in] | y-y Moment[k-in] | z-z Moment[k-in] |
|---|---|---|---|---|---|---|---|---|---|
| 541 | 73 | M79 | 1 | 6.379 | -19.353 | 4.365 | -7.838 | -174.55 | -551.558 |
| 542 | | | 2 | 6.337 | -19.379 | 4.374 | -7.838 | -134.683 | -374.837 |
| 543 | | | 3 | 6.265 | -19.388 | 4.377 | -7.838 | -94.756 | -197.952 |
| 544 | | | 4 | 6.185 | -19.394 | 4.382 | -7.838 | -54.787 | -20.985 |
| 545 | | | 5 | 6.123 | -19.391 | 4.383 | -7.838 | -14.795 | 155.981 |
| 546 | | | 6 | -12.347 | -21.946 | 2.814 | -6.63 | -38.79 | -243.704 |
| 547 | | | 7 | -12.409 | -21.936 | 2.812 | -6.63 | -13.123 | -43.482 |
| 548 | | | 8 | -12.487 | -21.94 | 2.811 | -6.63 | 12.531 | 156.699 |
| 549 | | | 9 | -12.556 | -21.955 | 2.813 | -6.63 | 38.194 | 357 |
| 550 | | | 10 | -12.596 | -22.007 | 2.818 | -6.63 | 63.892 | 557.638 |

## Input Parameters

Chord | Plate | Branch A | Branch B | Branch C | Branch D | Gap/Overlap

**SECTION**

Material: A1085 HSS

Section: HSS6X6X1/2

Yield Stress $F_y$ (ksi): 50

Tensile Strength $F_u$ (ksi): 65

| | | | | | |
|---|---|---|---|---|---|
| Area $A_g$ ($in^2$) | 10.400 | Height h (in) | 6.00 | Width b (in) | 6.00 |
| | | Diameter D (in) | N/A | Thickness t (in) | 0.500 |
| | | Section Modulus $S_x$ ($in^3$) | 16.8000 | Plastic Modulus $Z_x$ ($in^3$) | 20.9000 |
| Vertical | Horizontal | Section Modulus $S_y$ ($in^3$) | 16.8000 | Plastic Modulus $Z_y$ ($in^3$) | 20.9000 |

**FACTORED LOADS - Axial: Tens.(+) Comp.(-), Moment: CW(+) CCW (-)**

| | | | |
|---|---|---|---|
| Axial Left (kip) | .7 | Axial Right(kip) | 6.6 |
| Moment Left (kip-in) | -245.3 | Moment Right(kip-in) | -653.8 |
| Point Load (kip) | | | |

## Schematic

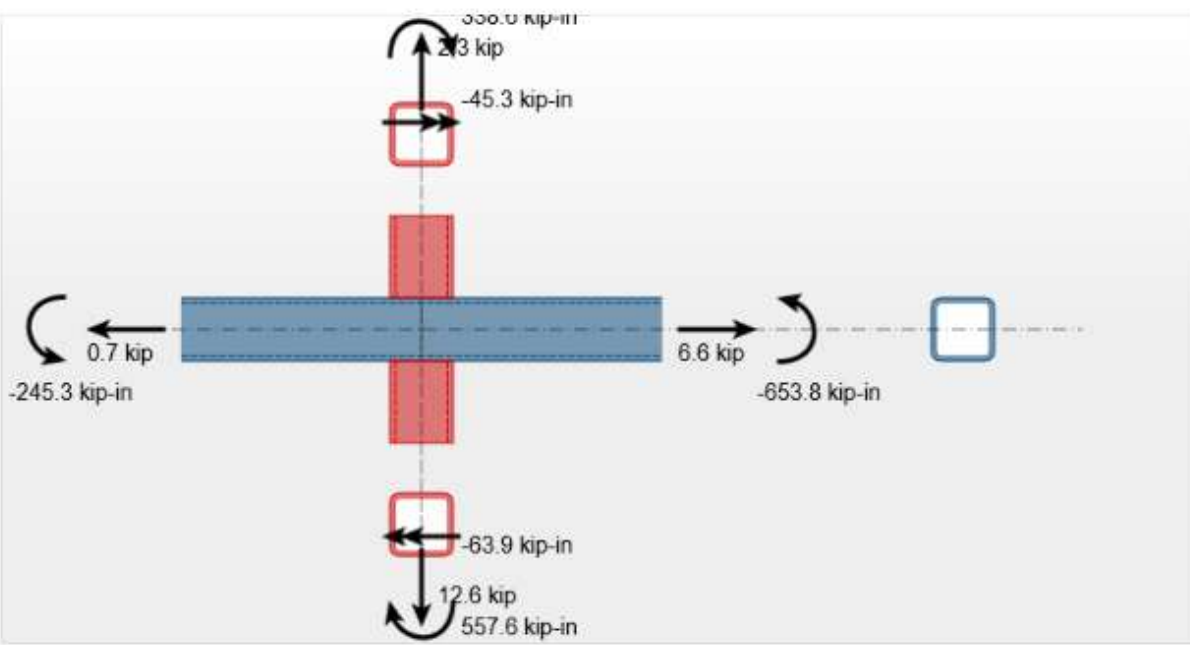

## Input Parameters

Chord | Plate | Branch A | Branch B | Branch C | Branch D | Gap/Overlap

**SECTION**

Material: A1085 HSS

Section: HSS6X6X1/2

Yield Stress $F_y$ (ksi): 50

Tensile Strength $F_u$ (ksi): 65

| | | | | | |
|---|---|---|---|---|---|
| Area $A_g$ ($in^2$) | 10.400 | Height h (in) | 6.00 | Width b (in) | 6.00 |
| | | Diameter D (in) | N/A | Thickness t (in) | 0.500 |
| | | Section Modulus $S_x$ ($in^3$) | 16.8000 | Plastic Modulus $Z_x$ ($in^3$) | 20.9000 |
| Vertical | Horizontal | Section Modulus $S_y$ ($in^3$) | 16.8000 | Plastic Modulus $Z_y$ ($in^3$) | 20.9000 |

**GEOMETRY**

Branch Angle θ (deg): 90

**FACTORED LOADS - Axial: Tens.(+) Comp.(-), Moment: CW(+) CCW (-)**

Axial (kip): 2.3

In-Plane Moment (kip-in): 338.6

Out-of-Plane Moment (kip-in): -45.3

## Schematic

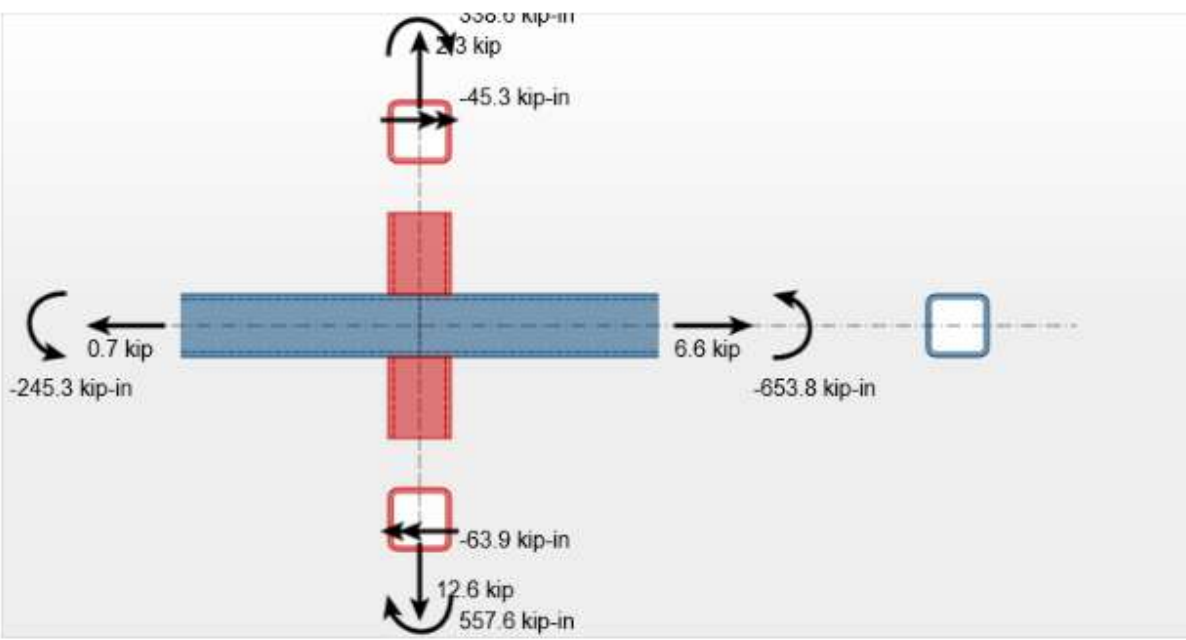

## Input Parameters

Chord | Plate | Branch A | Branch B | Branch C | Branch D | Gap/Overlap

**SECTION**

Material: A1085 HSS

Yield Stress $F_y$ (ksi): 50

Tensile Strength $F_u$ (ksi): 65

Section: HSS6X6X1/2

| | | | | | |
|---|---|---|---|---|---|
| Area $A_g$ ($in^2$) | 10.400 | Height h (in) | 6.00 | Width b (in) | 6.00 |
| | | Diameter D (in) | N/A | Thickness t (in) | 0.500 |
| | | Section Modulus $S_x$ ($in^3$) | 16.8000 | Plastic Modulus $Z_x$ ($in^3$) | 20.9000 |
| Vertical | Horizontal | Section Modulus $S_y$ ($in^3$) | 16.8000 | Plastic Modulus $Z_y$ ($in^3$) | 20.9000 |

**GEOMETRY**

Branch Angle θ (deg): 90

**FACTORED LOADS - Axial: Tens.(+) Comp.(-), Moment: CW(+) CCW (-)**

Axial (kip): 12.6

In-Plane Moment (kip-in): 557.6

Out-of-Plane Moment (kip-in): -63.9

## Schematic

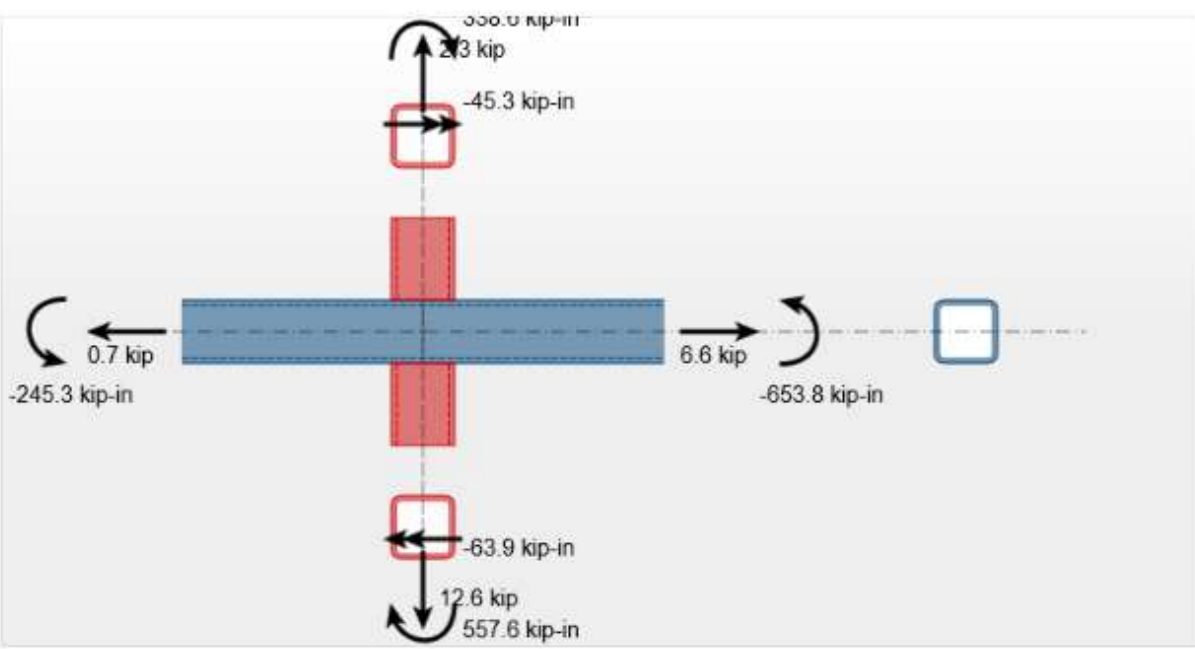

## Results

**Connection OK**

Branch A ----------
Total Factored Axial Load Pr = 2.3 kip
--X-Connection - 100%
----Factored Axial Load (X) Pr = 2.3 kip
----Factored Axial Load Capacity (X) Pc = 468 kip
Axial Load Interaction = 0.005
Factored In-Plane Moment Mrip = 338.6 kip-in
Factored In-Plane Moment Capacity Mcip = 722.5 kip-in
In-Plane Moment Interaction = 0.469
Factored Out-of-Plane Moment Mrop = -45.3 kip-in
Factored Out-of-Plane Moment Capacity Mcop = 884.8 kip-in
Out-of-Plane Moment Interaction = 0.051
Axial/Moment INTERACTION = 0.525

Branch B ----------
Total Factored Axial Load Pr = 12.6 kip
--Y-Connection - 82%
----Factored Axial Load (Y) Pr = 10.3 kip
----Factored Axial Load Capacity (Y) Pc = 468 kip
--X-Connection - 18%
----Factored Axial Load (X) Pr = 2.3 kip
----Factored Axial Load Capacity (X) Pc = 468 kip
Axial Load Interaction = 0.027
Factored In-Plane Moment Mrip = 557.6 kip-in
Factored In-Plane Moment Capacity Mcip = 722.5 kip-in
In-Plane Moment Interaction = 0.772
Factored Out-of-Plane Moment Mrop = -63.9 kip-in
Factored Out-of-Plane Moment Capacity Mcop = 884.8 kip-in
Out-of-Plane Moment Interaction = 0.072
Axial/Moment INTERACTION = 0.871

OVERALL INTERACTION -- 0.871

# CONNECTION 6

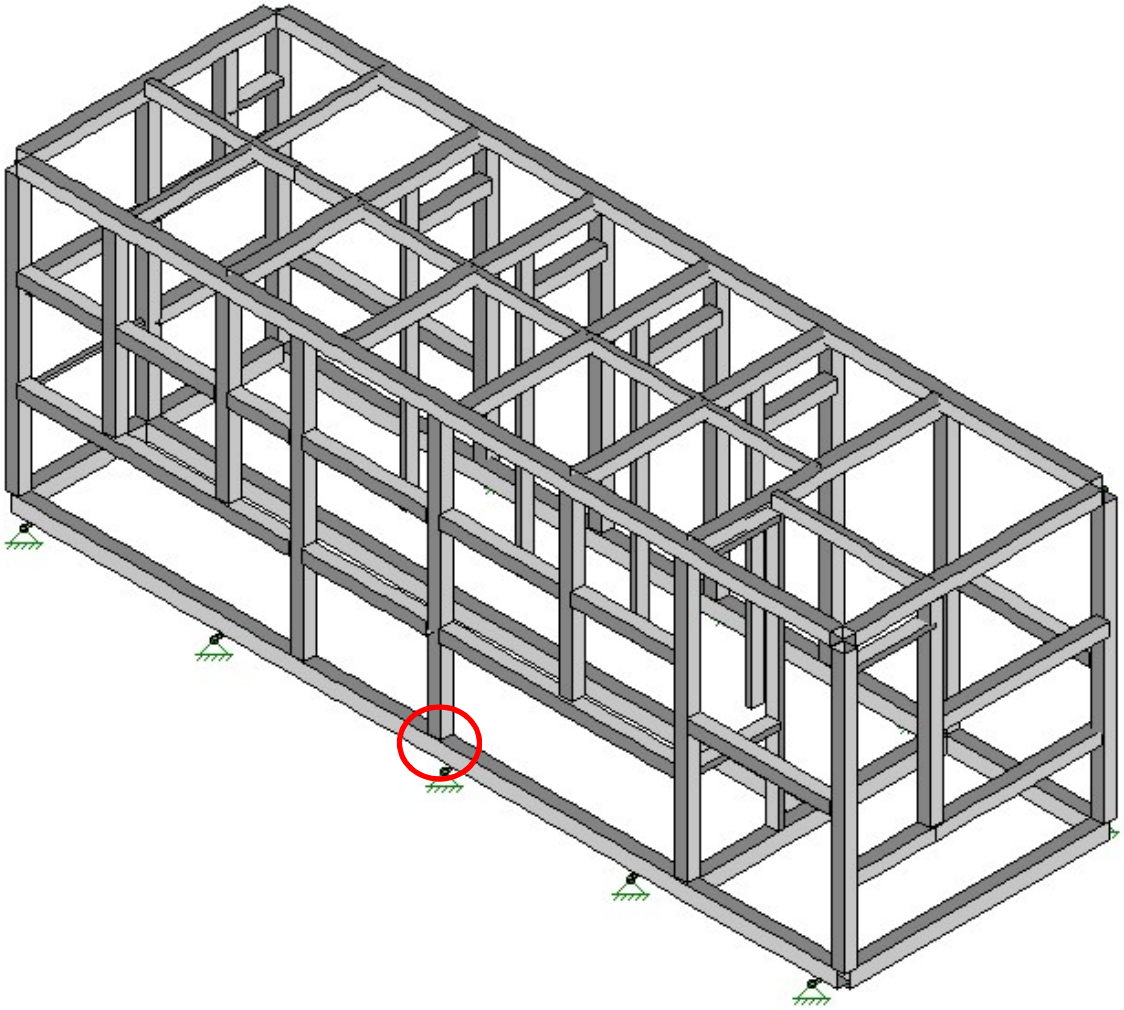

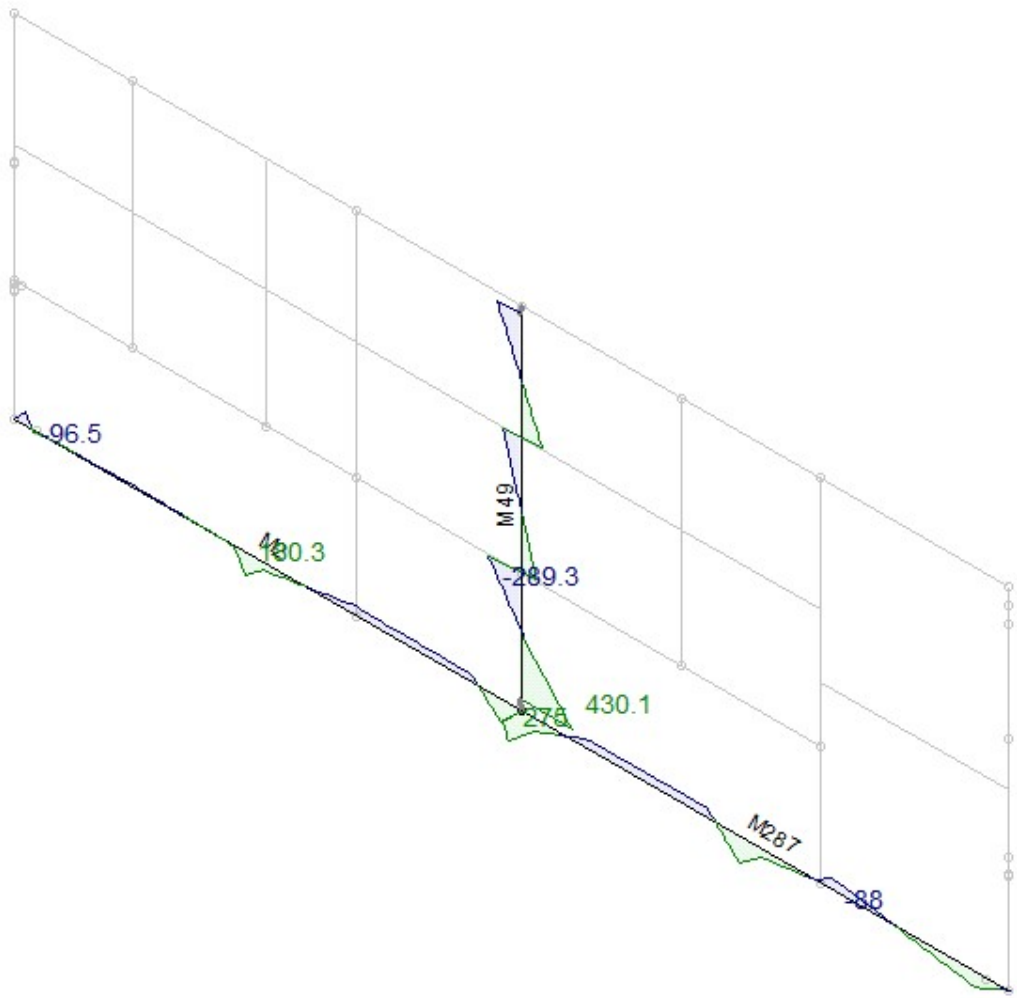


Member Section Forces (By Combination)

Sections | Maximums | End Reactions

| | L... | Member Label | S... | Axial[k] | y Shea... | z Shea... | Torque[k-in] | y-y Moment[k-in] | z-z Moment[k-in] |
|---|---|---|---|---|---|---|---|---|---|
| 11 | 70 | M2 | 1 | 8.269 | -1.782 | 14.657 | -28.257 | -96.498 | -232.48 |
| 12 | | | 2 | 4.154 | -3.638 | -.402 | 44.321 | 1.031 | -182.947 |
| 13 | | | 3 | 4.333 | -4.943 | .495 | 19.06 | -11.942 | -104.402 |
| 14 | | | 4 | 4.336 | -5.022 | .497 | 19.06 | -.636 | 9.201 |
| 15 | | | 5 | 4.495 | -7.136 | 14.611 | -26.407 | 28.891 | 122.721 |
| 16 | | | 6 | -12.377 | 3.761 | -4.154 | -28.399 | 19.208 | 87.368 |
| 17 | | | 7 | -12.257 | 1.348 | -1.841 | -84.376 | -70.487 | 7.408 |
| 18 | | | 8 | 4.638 | -9.495 | .046 | 26.26 | -58.989 | -176.133 |
| 19 | | | 9 | 4.862 | -11.735 | 9.965 | -29.359 | -53.737 | 38.814 |
| 20 | | | 10 | 4.867 | -11.839 | 9.964 | -29.359 | 173.39 | 307.521 |

Member Section Forces (By Combination)

Sections | Maximums | End Reactions

| | L... | Member Label | S... | Axial[k] | y Shea... | z Shea... | Torque[k-in] | y-y Moment[k-in] | z-z Moment[k-in] |
|---|---|---|---|---|---|---|---|---|---|
| 851 | 70 | M287 | 1 | 24.043 | -29.356 | 13.959 | 163.766 | 163.958 | -199.374 |
| 852 | | | 2 | -2.083 | -.213 | -11.806 | 61.699 | -48.919 | -40.922 |
| 853 | | | 3 | -1.946 | -2.518 | -.075 | 11.148 | -72.751 | 6.285 |
| 854 | | | 4 | -1.943 | -2.615 | -.076 | 11.148 | -74.408 | 62.372 |
| 855 | | | 5 | -1.666 | -4.469 | 10.492 | -23.298 | 90.083 | 147.141 |
| 856 | | | 6 | -23.928 | 12.461 | -3.282 | -88.15 | 25.9 | -13.489 |
| 857 | | | 7 | -8.668 | -12.449 | 2.605 | 18.3 | -62.055 | -303.175 |
| 858 | | | 8 | -8.682 | -13.574 | 3.039 | 9.73 | .838 | -16.092 |
| 859 | | | 9 | -8.677 | -13.749 | 3.044 | 9.73 | 67.358 | 282.709 |
| 860 | | | 10 | -5.606 | 38.073 | -16.204 | -273.071 | -18.622 | 128.643 |

Member Section Forces (By Combination)

Sections | Maximums | End Reactions

| | L... | Member Label | S... | Axial[k] | y Shea... | z Shea... | Torque[k-in] | y-y Moment[k-in] | z-z Moment[k-in] |
|---|---|---|---|---|---|---|---|---|---|
| 271 | 70 | M49 | 1 | 17.511 | -3.99 | -19.189 | 9.432 | 430.137 | -177.163 |
| 272 | | | 2 | 17.483 | -4.03 | -19.271 | 9.432 | 141.524 | -116.956 |
| 273 | | | 3 | 17.561 | -3.945 | -16.196 | 11.257 | -89.685 | -56.087 |
| 274 | | | 4 | 10.058 | -2.013 | -6.209 | 5.524 | 129.422 | -39.909 |
| 275 | | | 5 | 10.002 | -2.016 | -6.22 | 5.524 | 36.198 | -9.697 |
| 276 | | | 6 | 9.942 | -2.014 | -6.217 | 5.524 | -57.117 | 20.536 |
| 277 | | | 7 | 9.88 | -2.009 | -6.202 | 5.524 | -150.276 | 50.71 |
| 278 | | | 8 | 7.801 | -1.971 | -9.164 | 1.899 | 64.424 | 72.92 |
| 279 | | | 9 | 7.704 | -1.962 | -9.164 | 1.899 | -73.046 | 102.419 |
| 280 | | | 10 | 7.546 | -1.945 | -9.143 | 1.899 | -210.357 | 131.702 |

## Input Parameters

Chord | Plate | Branch A | Branch B | Branch C | Branch D | Gap/Overlap

**SECTION**

Material: A1085 HSS

Section: HSS8X6X1/2

Yield Stress $F_y$ (ksi): 50

Tensile Strength $F_u$ (ksi): 65

| | | | | | |
|---|---|---|---|---|---|
| Area $A_g$ ($in^2$) | 12.400 | Height h (in) | 8.00 | Width b (in) | 6.00 |
| | | Diameter D (in) | N/A | Thickness t (in) | 0.500 |
| | | Section Modulus $S_x$ ($in^3$) | 25.8000 | Plastic Modulus $Z_x$ ($in^3$) | 32.2000 |
| Vertical | Horizontal | Section Modulus $S_y$ ($in^3$) | 21.9000 | Plastic Modulus $Z_y$ ($in^3$) | 26.4000 |

**FACTORED LOADS - Axial: Tens.(+) Comp.(-), Moment: CW(+) CCW (-)**

| | | | |
|---|---|---|---|
| Axial Left (kip) | -4.87 | Axial Right(kip) | -24 |
| Moment Left (kip-in) | -307.5 | Moment Right(kip-in) | -199.4 |
| Point Load (kip) | | | |

## Schematic

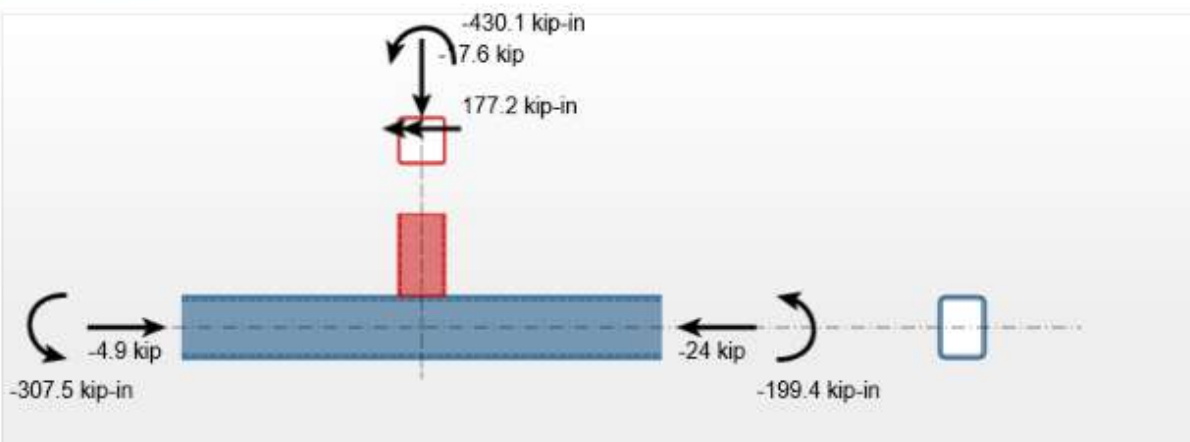

## Input Parameters

Chord | Plate | Branch A | Branch B | Branch C | Branch D | Gap/Overlap

**SECTION**

Material: A1085 HSS

Section: HSS6X6X5/16

Yield Stress $F_y$ (ksi): 50

Tensile Strength $F_u$ (ksi): 65

Area $A_g$ ($in^2$): 6.870

Height h (in): 6.00

Width b (in): 6.00

Diameter D (in): N/A

Thickness t (in): 0.313

Section Modulus $S_x$ ($in^3$): 12.1000

Plastic Modulus $Z_x$ ($in^3$): 14.5000

Vertical | Horizontal

Section Modulus $S_y$ ($in^3$): 12.1000

Plastic Modulus $Z_y$ ($in^3$): 14.5000

**GEOMETRY**

Branch Angle θ (deg): 90

**FACTORED LOADS - Axial: Tens.(+) Comp.(-), Moment: CW(+) CCW (-)**

Axial (kip): -17.6

In-Plane Moment (kip-in): -430.1

Out-of-Plane Moment (kip-in): 177.2

## Schematic

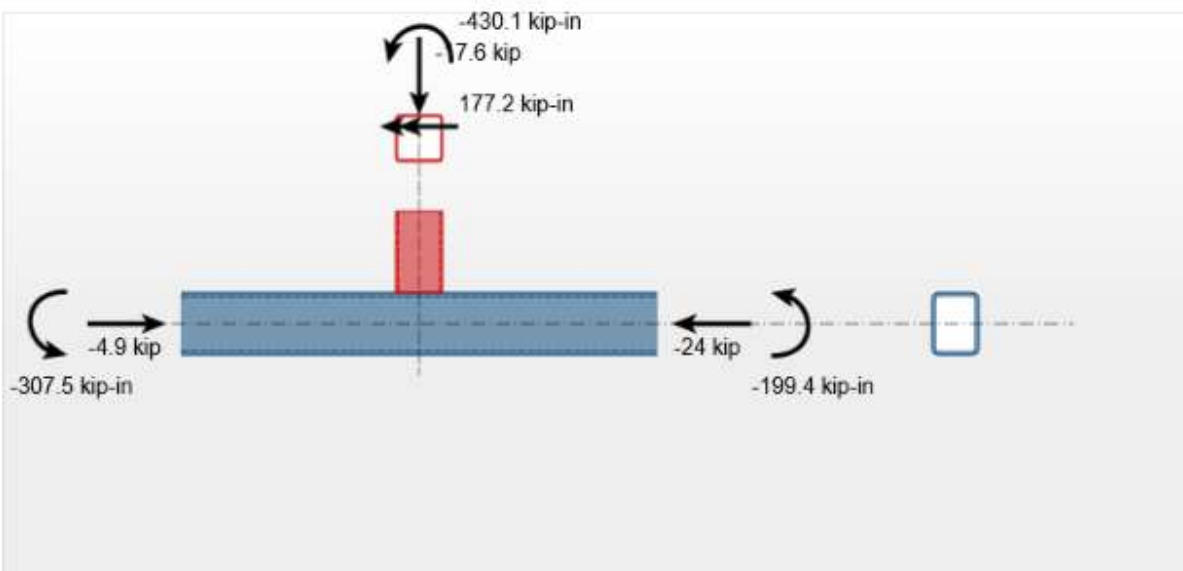

## Results

**Connection OK**

Branch A ----------
Total Factored Axial Load Pr = -17.6 kip
--Y-Connection - 100%
----Factored Axial Load (Y) Pr = -17.6 kip
----Factored Axial Load Capacity (Y) Pc = 309.2 kip
Axial Load Interaction = 0.057
Factored In-Plane Moment Mrip = -430.1 kip-in
Factored In-Plane Moment Capacity Mcip = 652.5 kip-in
In-Plane Moment Interaction = 0.659
Factored Out-of-Plane Moment Mrop = 177.2 kip-in
Factored Out-of-Plane Moment Capacity Mcop = 652.5 kip-in
Out-of-Plane Moment Interaction = 0.272
Axial/Moment INTERACTION = 0.988

OVERALL INTERACTION -- 0.988

# CONNECTION 7

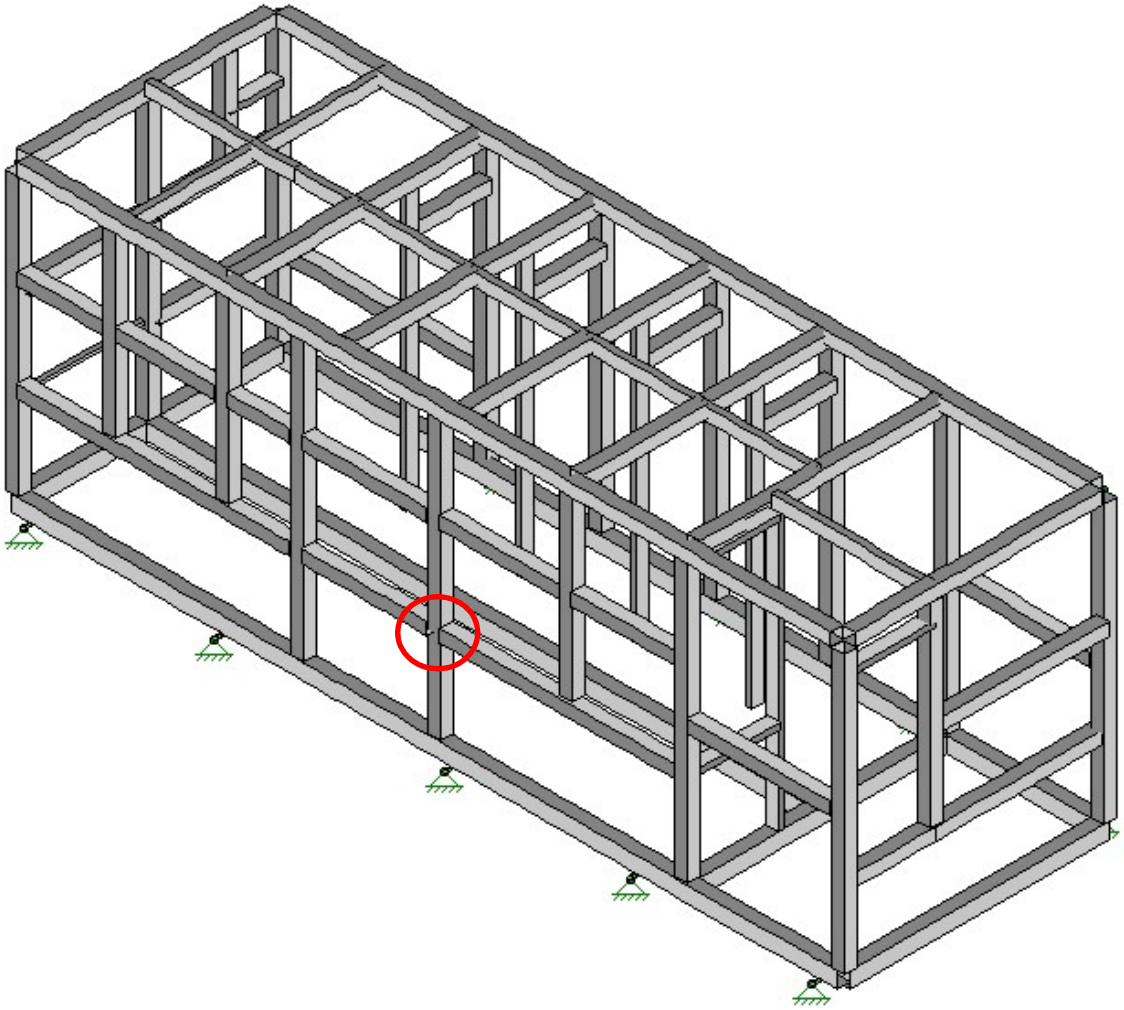

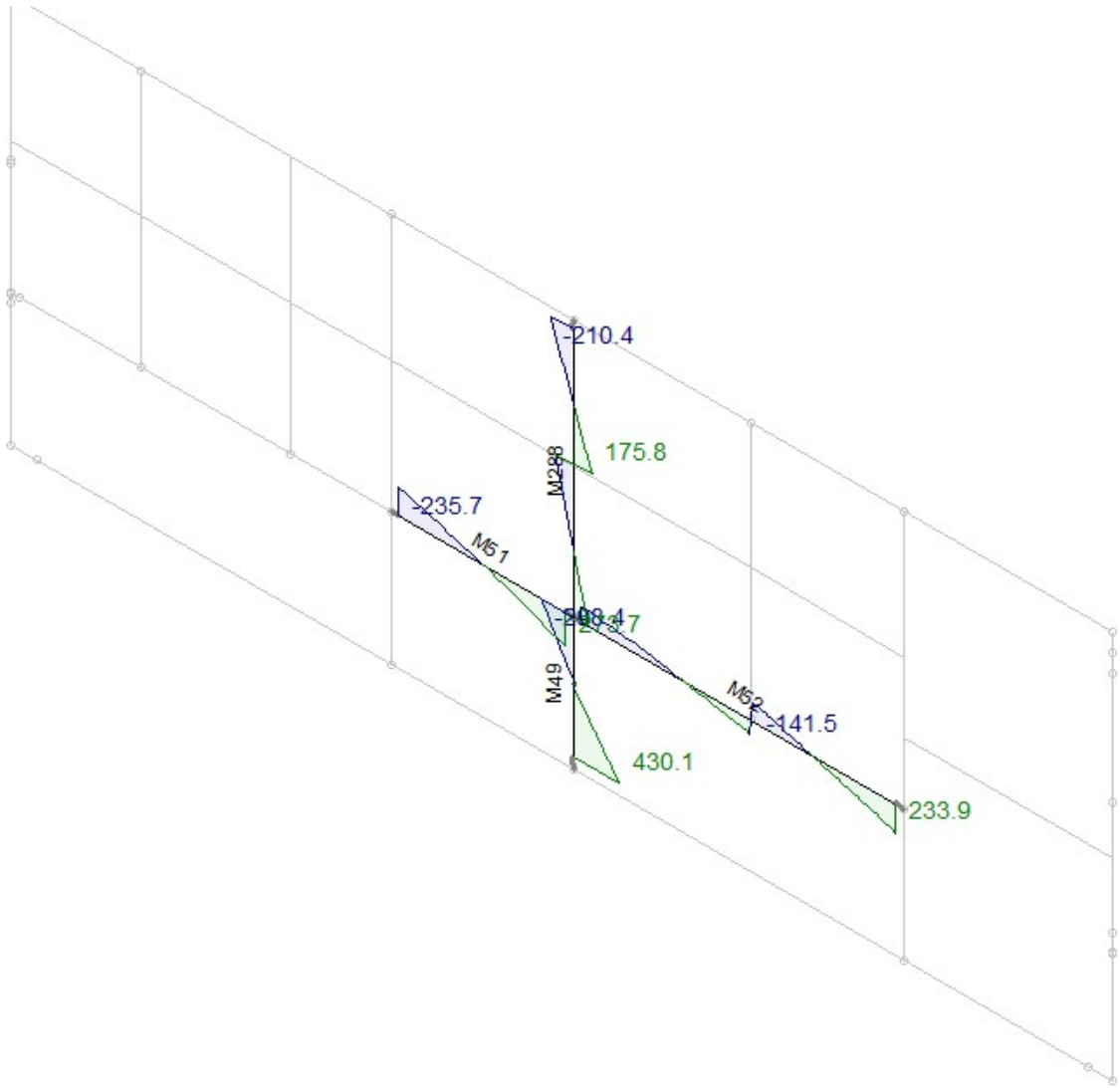


Member Section Forces (By Combination)

Sections | Maximums | End Reactions

| | L... | Member Label | S... | Axial[k] | y Shea... | z Shea... | Torque[k-in] | y-y Moment[k-in] | z-z Moment[k-in] |
|---|---|---|---|---|---|---|---|---|---|
| 271 | 70 | M49 | 1 | 17.512 | -3.99 | -19.19 | 9.432 | 430.136 | -177.165 |
| 272 | | | 2 | 17.495 | -4.01 | -19.237 | 9.432 | 335.684 | -157.502 |
| 273 | | | 3 | 17.48 | -4.03 | -19.271 | 9.432 | 241.091 | -137.777 |
| 274 | | | 4 | 17.468 | -4.03 | -19.271 | 9.432 | 146.341 | -117.964 |
| 275 | | | 5 | 17.459 | -4.045 | -19.288 | 9.432 | 51.533 | -98.096 |
| 276 | | | 6 | 17.553 | -3.945 | -16.196 | 11.257 | -1.956 | -77.457 |
| 277 | | | 7 | 17.544 | -3.945 | -16.196 | 11.257 | -81.587 | -58.06 |
| 278 | | | 8 | 17.355 | -4.022 | -14.783 | 9.01 | -152.987 | -38.481 |
| 279 | | | 9 | 17.348 | -4.022 | -14.783 | 9.01 | -225.669 | -18.707 |
| 280 | | | 10 | 17.345 | -4.022 | -14.783 | 9.01 | -298.35 | 1.067 |

Member Section Forces (By Combination)

Sections | Maximums | End Reactions

| | L... | Member Label | S... | Axial[k] | y Shea... | z Shea... | Torque[k-in] | y-y Moment[k-in] | z-z Moment[k-in] |
|---|---|---|---|---|---|---|---|---|---|
| 861 | 70 | M288 | 1 | 10.06 | -2.013 | -6.21 | 5.524 | 134.08 | -41.419 |
| 862 | | | 2 | 10.028 | -2.015 | -6.216 | 5.524 | 71.439 | -21.117 |
| 863 | | | 3 | 9.977 | -2.016 | -6.222 | 5.524 | 8.72 | -.793 |
| 864 | | | 4 | 9.922 | -2.014 | -6.217 | 5.524 | -54.009 | 19.53 |
| 865 | | | 5 | 9.871 | -2.012 | -6.211 | 5.524 | -116.67 | 39.827 |
| 866 | | | 6 | 7.816 | -1.978 | -9.153 | 1.899 | 159.065 | 52.507 |
| 867 | | | 7 | 7.77 | -1.971 | -9.164 | 1.899 | 66.715 | 72.428 |
| 868 | | | 8 | 7.711 | -1.967 | -9.166 | 1.899 | -25.699 | 92.281 |
| 869 | | | 9 | 7.637 | -1.957 | -9.16 | 1.899 | -118.084 | 112.043 |
| 870 | | | 10 | 7.547 | -1.945 | -9.143 | 1.899 | -210.359 | 131.705 |

Member Section Forces (By Combination)

Sections | Maximums | End Reactions

| | L... | Member Label | S... | Axial[k] | y Shea... | z Shea... | Torque[k-in] | y-y Moment[k-in] | z-z Moment[k-in] |
|---|---|---|---|---|---|---|---|---|---|
| 291 | 70 | M51 | 1 | 2.537 | .181 | 7.644 | -3.029 | -235.698 | -1.18 |
| 292 | | | 2 | 2.537 | .181 | 7.671 | -3.029 | -184.111 | -2.397 |
| 293 | | | 3 | 2.537 | .181 | 7.702 | -3.029 | -132.327 | -3.613 |
| 294 | | | 4 | 2.537 | .18 | 7.738 | -3.029 | -80.321 | -4.829 |
| 295 | | | 5 | 2.537 | .18 | 7.775 | -3.029 | -28.074 | -6.044 |
| 296 | | | 6 | 2.537 | .18 | 7.815 | -3.029 | 24.436 | -7.259 |
| 297 | | | 7 | 2.187 | 1.011 | 9.813 | -30.082 | 74.468 | -5.3 |
| 298 | | | 8 | 2.187 | 1.011 | 9.848 | -30.082 | 140.701 | -12.109 |
| 299 | | | 9 | 2.187 | 1.01 | 9.875 | -30.082 | 207.147 | -18.917 |
| 300 | | | 10 | 2.187 | 1.01 | 9.887 | -30.082 | 273.72 | -25.723 |

Member Section Forces (By Combination)

Sections | Maximums | End Reactions

| | L... | Member Label | S... | Axial[k] | y Shea... | z Shea... | Torque[k-in] | y-y Moment[k-in] | z-z Moment[k-in] |
|---|---|---|---|---|---|---|---|---|---|
| 301 | 70 | M52 | 1 | -6.337 | -.967 | 2.621 | 12.405 | -121.189 | -29.338 |
| 302 | | | 2 | -6.337 | -.965 | 2.698 | 12.405 | -87.248 | -17.009 |
| 303 | | | 3 | -6.022 | -.789 | 4.469 | -10.269 | -47.268 | -1.6 |
| 304 | | | 4 | -6.022 | -.79 | 4.538 | -10.269 | 10.211 | 8.475 |
| 305 | | | 5 | -6.022 | -.791 | 4.601 | -10.269 | 68.527 | 18.56 |
| 306 | | | 6 | 3.693 | .603 | 5.715 | 16.524 | -134.896 | 27.898 |
| 307 | | | 7 | 4.022 | .858 | 7.372 | -3.732 | -51.561 | 22.648 |
| 308 | | | 8 | 4.022 | .859 | 7.43 | -3.732 | 42.902 | 11.688 |
| 309 | | | 9 | 4.022 | .86 | 7.484 | -3.732 | 138.09 | .72 |
| 310 | | | 10 | 4.022 | .859 | 7.533 | -3.732 | 233.936 | -10.25 |

## Input Parameters

Chord | Plate | Branch A | Branch B | Branch C | Branch D | Gap/Overlap

**SECTION**

Material: A1085 HSS

Section: HSS6X6X5/16

Yield Stress $F_y$ (ksi): 50

Tensile Strength $F_u$ (ksi): 65

| | | | | | |
|---|---|---|---|---|---|
| Area $A_g$ ($in^2$) | 6.870 | Height h (in) | 6.00 | Width b (in) | 6.00 |
| | | Diameter D (in) | N/A | Thickness t (in) | 0.313 |
| | | Section Modulus $S_x$ ($in^3$) | 12.1000 | Plastic Modulus $Z_x$ ($in^3$) | 14.5000 |
| Vertical | Horizontal | Section Modulus $S_y$ ($in^3$) | 12.1000 | Plastic Modulus $Z_y$ ($in^3$) | 14.5000 |

**FACTORED LOADS - Axial: Tens.(+) Comp.(-), Moment: CW(+) CCW (-)**

| | | | |
|---|---|---|---|
| Axial Left (kip) | -17.4 | Axial Right(kip) | -10.1 |
| Moment Left (kip-in) | -298.4 | Moment Right(kip-in) | -134.1 |
| Point Load (kip) | | | |

## Schematic

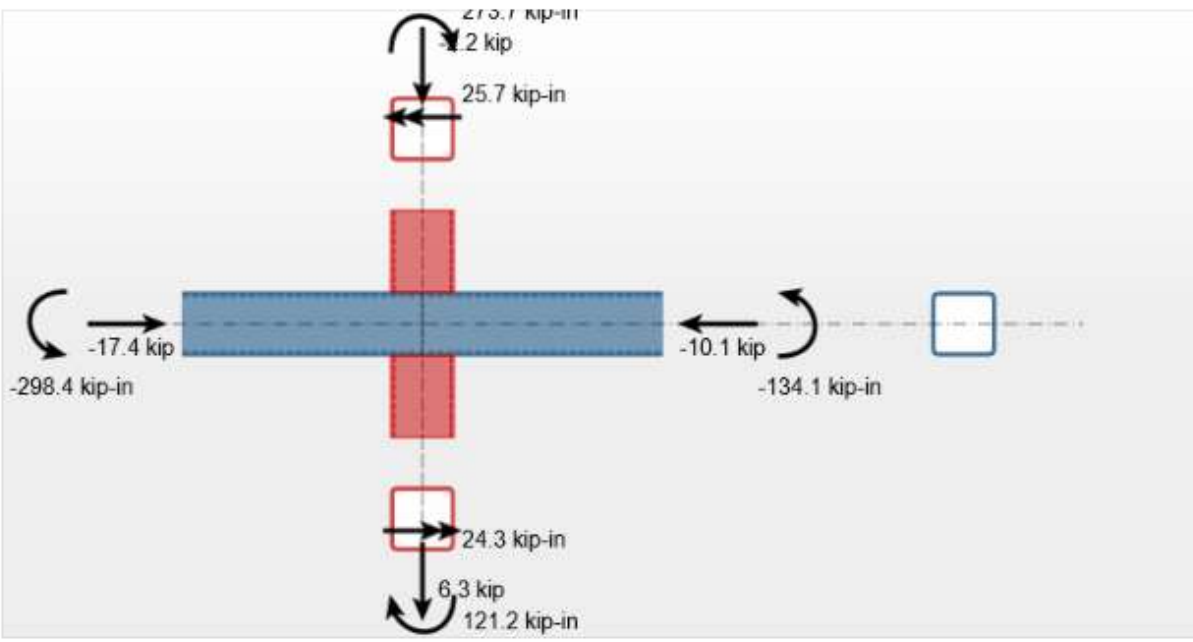

## Input Parameters

Chord | Plate | Branch A | Branch B | Branch C | Branch D | Gap/Overlap

**SECTION**

Material: A1085 HSS

Section: HSS6X6X5/16

Yield Stress $F_y$ (ksi): 50

Tensile Strength $F_u$ (ksi): 65

| | | | | | |
|---|---|---|---|---|---|
| Area $A_g$ ($in^2$) | 6.870 | Height h (in) | 6.00 | Width b (in) | 6.00 |
| | | Diameter D (in) | N/A | Thickness t (in) | 0.313 |
| | | Section Modulus $S_x$ ($in^3$) | 12.1000 | Plastic Modulus $Z_x$ ($in^3$) | 14.5000 |
| Vertical / Horizontal | | Section Modulus $S_y$ ($in^3$) | 12.1000 | Plastic Modulus $Z_y$ ($in^3$) | 14.5000 |

**GEOMETRY**

Branch Angle θ (deg): 90

**FACTORED LOADS - Axial: Tens.(+) Comp.(-), Moment: CW(+) CCW (-)**

Axial (kip): -2.2

In-Plane Moment (kip-in): 273.7

Out-of-Plane Moment (kip-in): 25.7

## Schematic

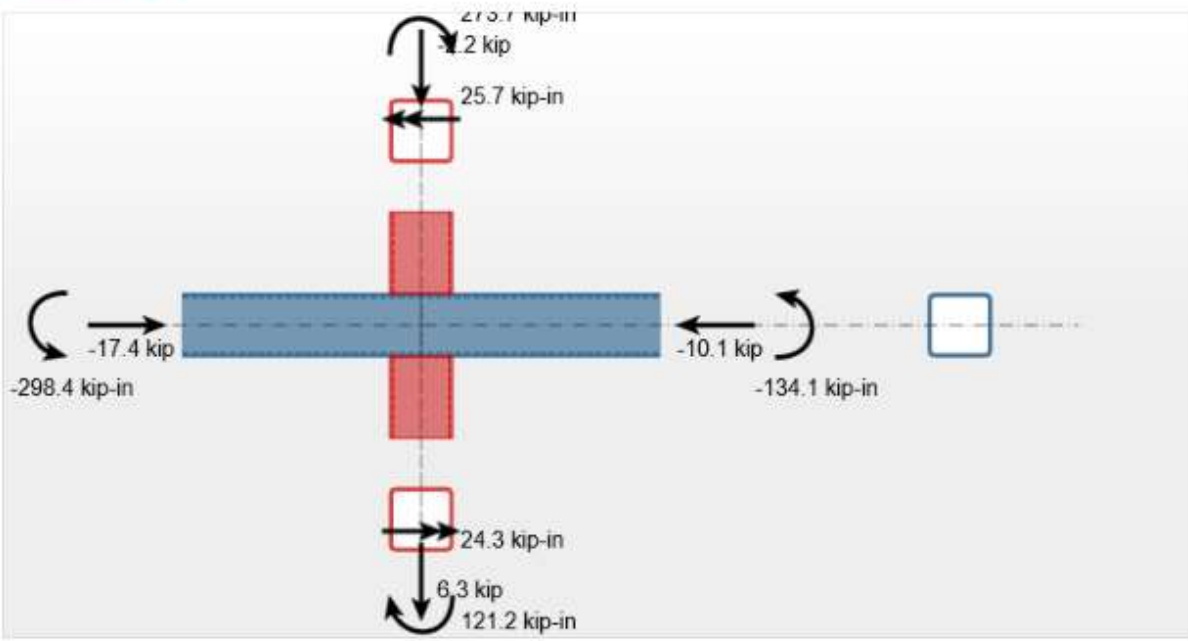

## Input Parameters

Chord | Plate | Branch A | Branch B | Branch C | Branch D | Gap/Overlap

**SECTION**

Material: A1085 HSS

Section: HSS6X6X5/16

Yield Stress $F_y$ (ksi): 50

Tensile Strength $F_u$ (ksi): 65

| | | | | | |
|---|---|---|---|---|---|
| Area $A_g$ (in$^2$) | 6.870 | Height h (in) | 6.00 | Width b (in) | 6.00 |
| | | Diameter D (in) | N/A | Thickness t (in) | 0.313 |
| | | Section Modulus $S_x$ (in$^3$) | 12.1000 | Plastic Modulus $Z_x$ (in$^3$) | 14.5000 |
| Vertical / Horizontal | | Section Modulus $S_y$ (in$^3$) | 12.1000 | Plastic Modulus $Z_y$ (in$^3$) | 14.5000 |

**GEOMETRY**

Branch Angle θ (deg): 90

**FACTORED LOADS - Axial: Tens.(+) Comp.(-), Moment: CW(+) CCW (-)**

Axial (kip): 6.3

In-Plane Moment (kip-in): 121.2

Out-of-Plane Moment (kip-in): 24.3

## Schematic

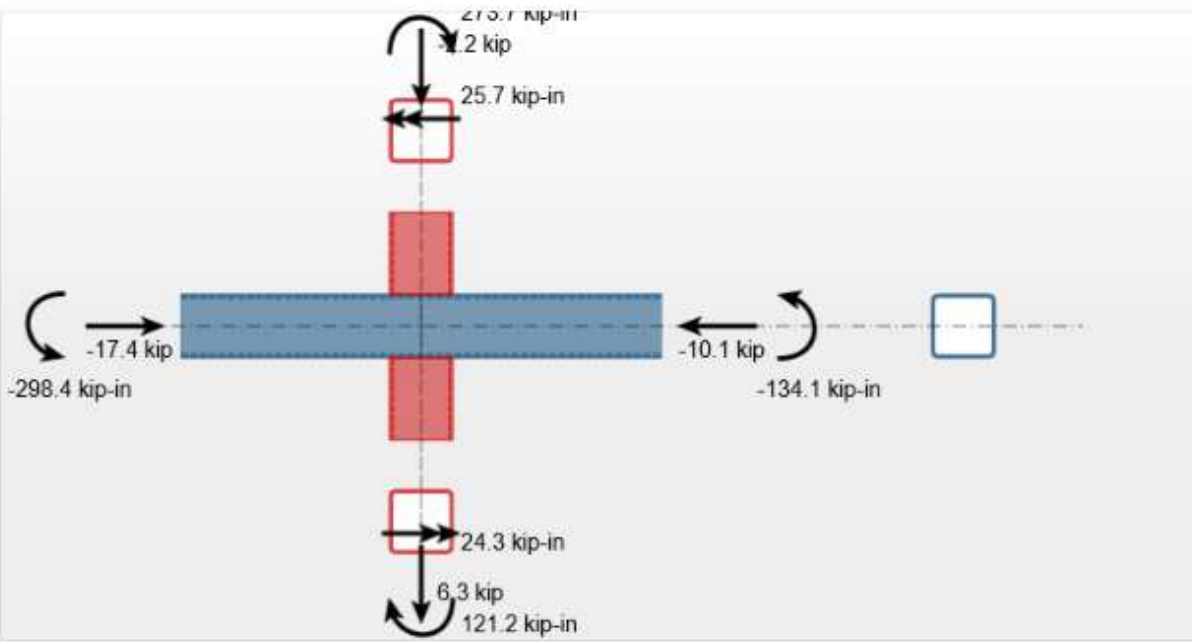

## Results

**Connection OK**

Branch A ----------
Total Factored Axial Load Pr = -2.2 kip
--Y-Connection - 100%
----Factored Axial Load (Y) Pr = -2.2 kip
----Factored Axial Load Capacity (Y) Pc = 252.9 kip
Axial Load Interaction = 0.009
Factored In-Plane Moment Mrip = 273.7 kip-in
Factored In-Plane Moment Capacity Mcip = 358.2 kip-in
In-Plane Moment Interaction = 0.764
Factored Out-of-Plane Moment Mrop = 25.7 kip-in
Factored Out-of-Plane Moment Capacity Mcop = 422.7 kip-in
Out-of-Plane Moment Interaction = 0.061
Axial/Moment INTERACTION = 0.834

Branch B ----------
Total Factored Axial Load Pr = 6.3 kip
--Y-Connection - 100%
----Factored Axial Load (Y) Pr = 6.3 kip
----Factored Axial Load Capacity (Y) Pc = 252.9 kip
Axial Load Interaction = 0.025
Factored In-Plane Moment Mrip = 121.2 kip-in
Factored In-Plane Moment Capacity Mcip = 358.2 kip-in
In-Plane Moment Interaction = 0.338
Factored Out-of-Plane Moment Mrop = 24.3 kip-in
Factored Out-of-Plane Moment Capacity Mcop = 422.7 kip-in
Out-of-Plane Moment Interaction = 0.057
Axial/Moment INTERACTION = 0.421

OVERALL INTERACTION -- 0.834

# CONNECTION 8

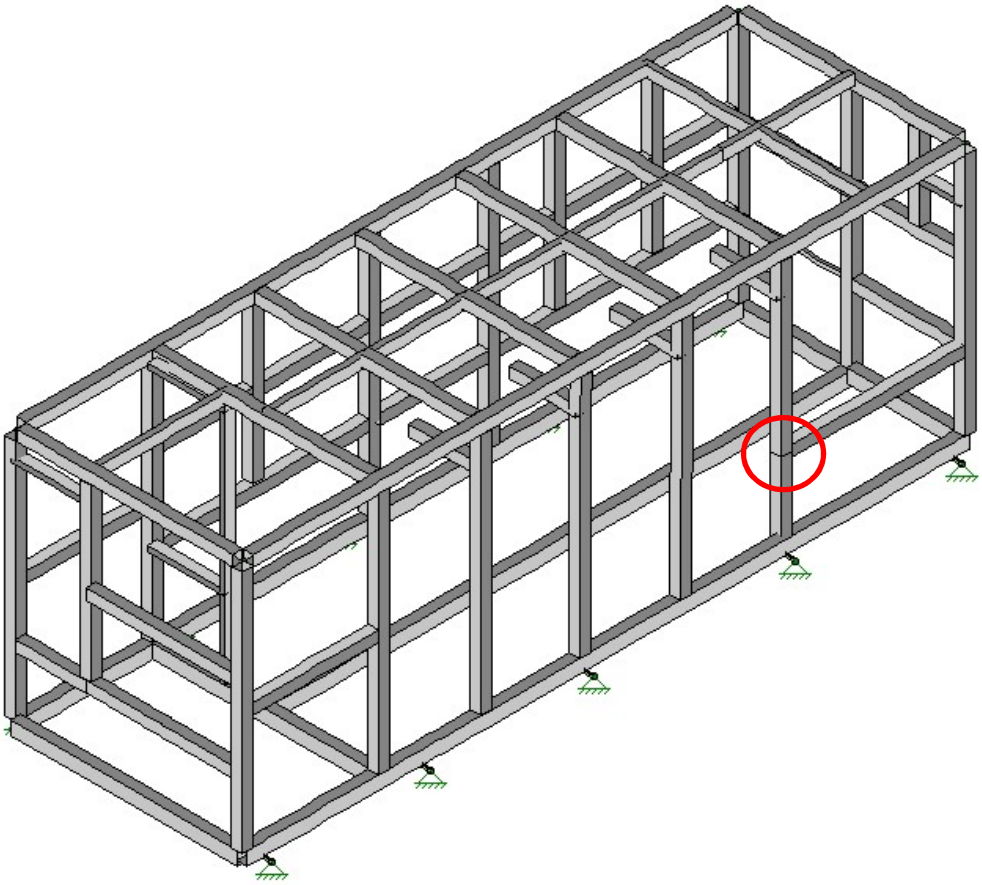

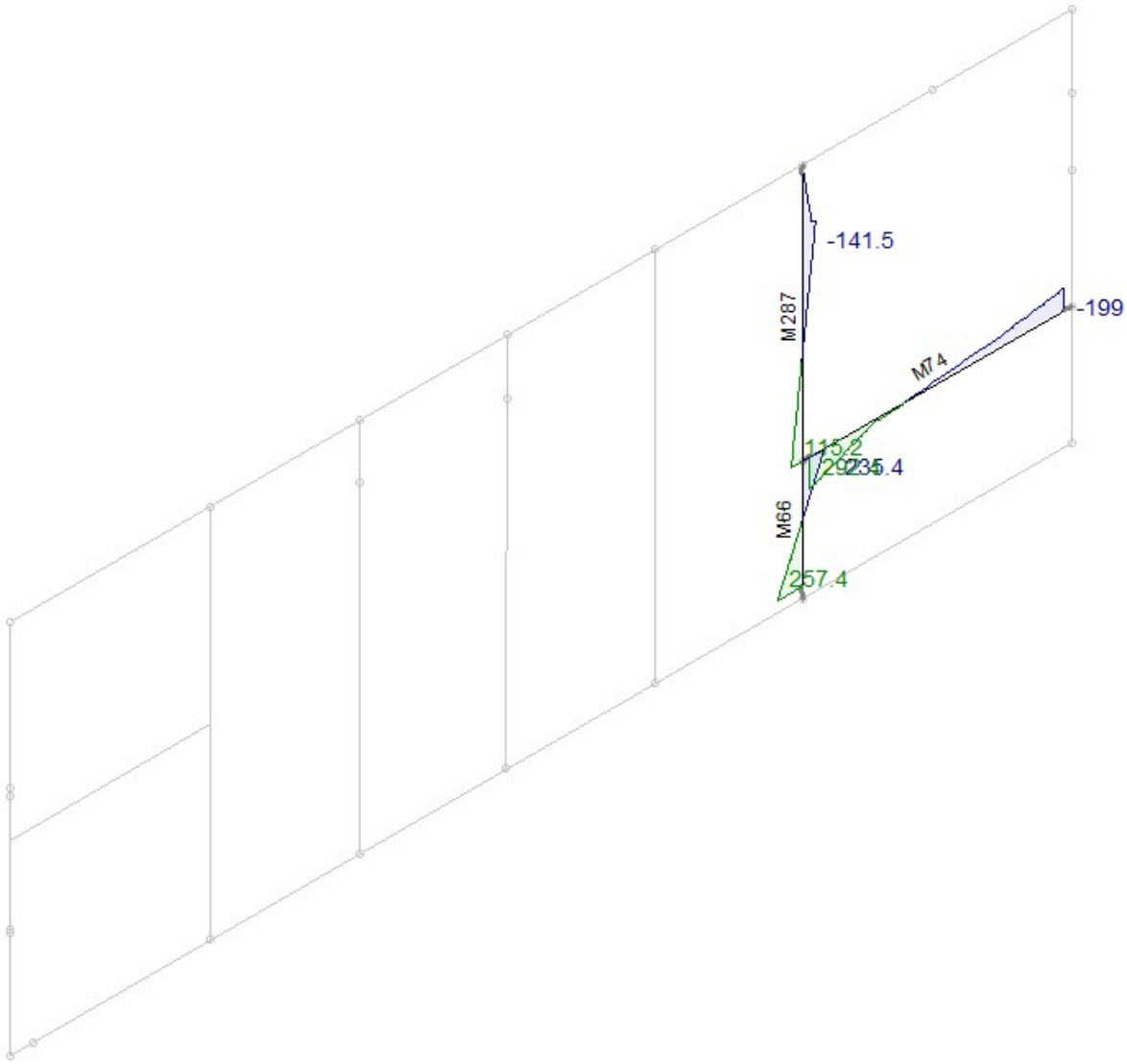


Member Section Forces (By Combination)

Sections | Maximums | End Reactions

| | L... | Member Label | S... | Axial[k] | y Shea... | z Shea... | Torque[k-in] | y-y Moment[k-in] | z-z Moment[k-in] |
|---|---|---|---|---|---|---|---|---|---|
| 511 | 72 | M74 | 1 | -2.301 | -2.533 | 4.153 | -26.375 | -199.036 | -66.86 |
| 512 | | | 2 | -2.301 | -2.532 | 4.201 | -26.375 | -154.517 | -39.846 |
| 513 | | | 3 | -2.301 | -2.531 | 4.294 | -26.375 | -109.247 | -12.845 |
| 514 | | | 4 | 3.703 | -2.37 | 2.688 | -17.494 | -78.655 | -32.956 |
| 515 | | | 5 | 3.703 | -2.371 | 2.842 | -17.494 | -49.172 | -7.665 |
| 516 | | | 6 | 3.703 | -2.371 | 3.004 | -17.494 | -17.997 | 17.629 |
| 517 | | | 7 | 3.703 | -2.369 | 3.153 | -17.494 | 14.856 | 42.915 |
| 518 | | | 8 | 7.576 | .478 | 10.899 | 53.742 | 58.281 | 24.67 |
| 519 | | | 9 | 7.576 | .481 | 10.984 | 53.742 | 175.013 | 19.553 |
| 520 | | | 10 | 7.576 | .482 | 11.013 | 53.742 | 292.368 | 14.417 |

Member Section Forces (By Combination)

Sections | Maximums | End Reactions

| | L... | Member Label | S... | Axial[k] | y Shea... | z Shea... | Torque[k-in] | y-y Moment[k-in] | z-z Moment[k-in] |
|---|---|---|---|---|---|---|---|---|---|
| 441 | 72 | M66 | 1 | 40.752 | 7.05 | -11.997 | -1.781 | 257.421 | 240.187 |
| 442 | | | 2 | 40.75 | 7.1 | -12.052 | -1.781 | 202.94 | 208.119 |
| 443 | | | 3 | 40.729 | 7.151 | -12.098 | -1.781 | 148.285 | 175.876 |
| 444 | | | 4 | 40.704 | 7.192 | -12.126 | -1.781 | 93.485 | 143.463 |
| 445 | | | 5 | 40.675 | 7.192 | -12.126 | -1.781 | 38.581 | 110.899 |
| 446 | | | 6 | 40.645 | 7.221 | -12.135 | -1.781 | -16.362 | 78.211 |
| 447 | | | 7 | 40.614 | 7.24 | -12.126 | -1.781 | -71.279 | 45.455 |
| 448 | | | 8 | 40.585 | 7.247 | -12.099 | -1.781 | -126.126 | 12.658 |
| 449 | | | 9 | 40.559 | 7.244 | -12.053 | -1.781 | -180.859 | -20.152 |
| 450 | | | 10 | 40.536 | 7.244 | -12.053 | -1.781 | -235.434 | -52.952 |

Member Section Forces (By Combination)

Sections | Maximums | End Reactions

| | L... | Member Label | S... | Axial[k] | y Shea... | z Shea... | Torque[k-in] | y-y Moment[k-in] | z-z Moment[k-in] |
|---|---|---|---|---|---|---|---|---|---|
| 851 | 72 | M287 | 1 | 20.938 | 4.241 | -3.37 | -5.627 | 115.188 | 135.949 |
| 852 | | | 2 | 20.866 | 4.241 | -3.37 | -5.627 | 79.897 | 91.535 |
| 853 | | | 3 | 20.785 | 4.241 | -3.37 | -5.627 | 44.606 | 47.122 |
| 854 | | | 4 | 20.681 | 4.241 | -3.37 | -5.627 | 9.315 | 2.708 |
| 855 | | | 5 | 20.551 | 4.241 | -3.37 | -5.627 | -25.976 | -41.706 |
| 856 | | | 6 | 20.419 | 4.241 | -3.37 | -5.627 | -61.267 | -86.12 |
| 857 | | | 7 | 20.299 | 4.241 | -3.37 | -5.627 | -96.558 | -130.533 |
| 858 | | | 8 | 20.215 | 4.241 | -3.37 | -5.627 | -131.849 | -174.947 |
| 859 | | | 9 | 12.816 | 2.521 | 4.795 | 55.226 | -65.286 | -49.049 |
| 860 | | | 10 | 12.785 | 2.521 | 4.795 | 55.226 | -15.072 | -75.446 |

## Input Parameters

Chord | Plate | Branch A | Branch B | Branch C | Branch D | Gap/Overlap

**SECTION**

Material: A1085 HSS

Section: HSS6X6X5/16

Yield Stress $F_y$ (ksi): 50

Tensile Strength $F_u$ (ksi): 65

| | | | | | |
|---|---|---|---|---|---|
| Area $A_g$ ($in^2$) | 6.870 | Height h (in) | 6.00 | Width b (in) | 6.00 |
| | | Diameter D (in) | N/A | Thickness t (in) | 0.313 |
| | | Section Modulus $S_x$ ($in^3$) | 12.1000 | Plastic Modulus $Z_x$ ($in^3$) | 14.5000 |
| Vertical | Horizontal | Section Modulus $S_y$ ($in^3$) | 12.1000 | Plastic Modulus $Z_y$ ($in^3$) | 14.5000 |

**FACTORED LOADS - Axial: Tens.(+) Comp.(-), Moment: CW(+) CCW (-)**

| | | | |
|---|---|---|---|
| Axial Left (kip) | -40.5 | Axial Right(kip) | -20.9 |
| Moment Left (kip-in) | 235.4 | Moment Right(kip-in) | 115.2 |
| Point Load (kip) | | | |

## Schematic

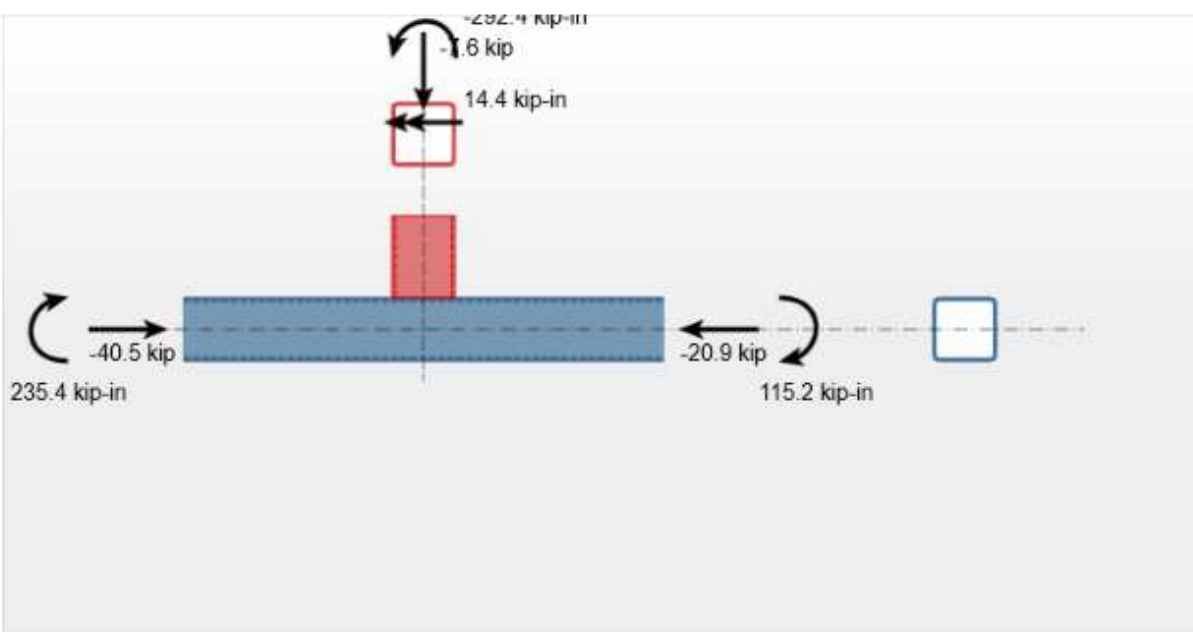

## Input Parameters

Chord | Plate | Branch A | Branch B | Branch C | Branch D | Gap/Overlap

**SECTION**

Material: A1085 HSS

Section: HSS6X6X5/16

Yield Stress $F_y$ (ksi): 50

Tensile Strength $F_u$ (ksi): 65

Area $A_g$ ($in^2$): 6.870

Height h (in): 6.00

Width b (in): 6.00

Diameter D (in): N/A

Thickness t (in): 0.313

Section Modulus $S_x$ ($in^3$): 12.1000

Plastic Modulus $Z_x$ ($in^3$): 14.5000

Vertical | Horizontal

Section Modulus $S_y$ ($in^3$): 12.1000

Plastic Modulus $Z_y$ ($in^3$): 14.5000

**GEOMETRY**

Branch Angle θ (deg): 90

**FACTORED LOADS - Axial: Tens.(+) Comp.(-), Moment: CW(+) CCW (-)**

Axial (kip): -7.6

In-Plane Moment (kip-in): -292.4

Out-of-Plane Moment (kip-in): 14.4

## Schematic

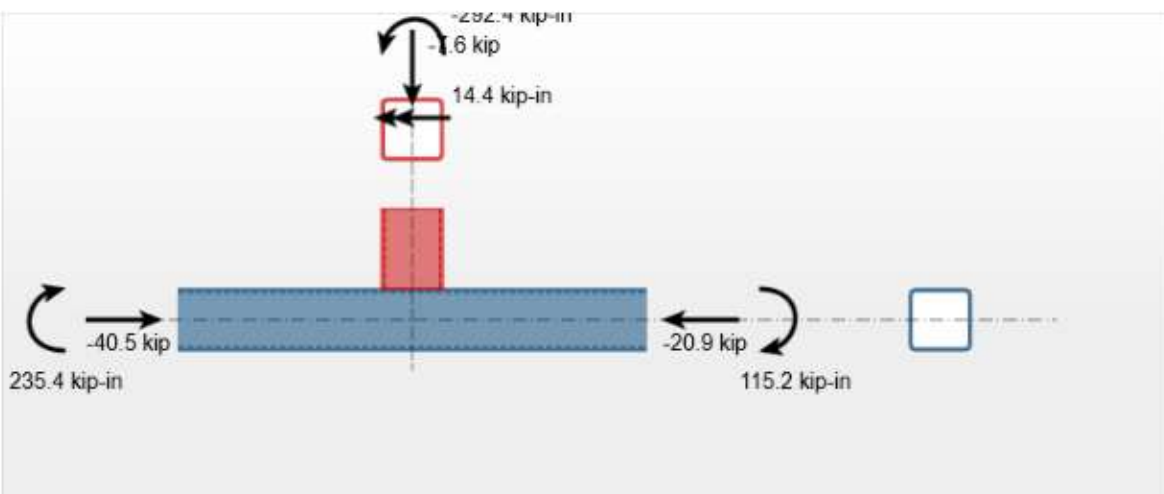

## Results

**Connection OK**

Branch A ----------
Total Factored Axial Load Pr = -7.6 kip
--Y-Connection - 100%
----Factored Axial Load (Y) Pr = -7.6 kip
----Factored Axial Load Capacity (Y) Pc = 252.9 kip
Axial Load Interaction = 0.03
Factored In-Plane Moment Mrip = -292.4 kip-in
Factored In-Plane Moment Capacity Mcip = 432.7 kip-in
In-Plane Moment Interaction = 0.676
Factored Out-of-Plane Moment Mrop = 14.4 kip-in
Factored Out-of-Plane Moment Capacity Mcop = 422.7 kip-in
Out-of-Plane Moment Interaction = 0.034
Axial/Moment INTERACTION = 0.74

OVERALL INTERACTION -- 0.74

# CONNECTION 9

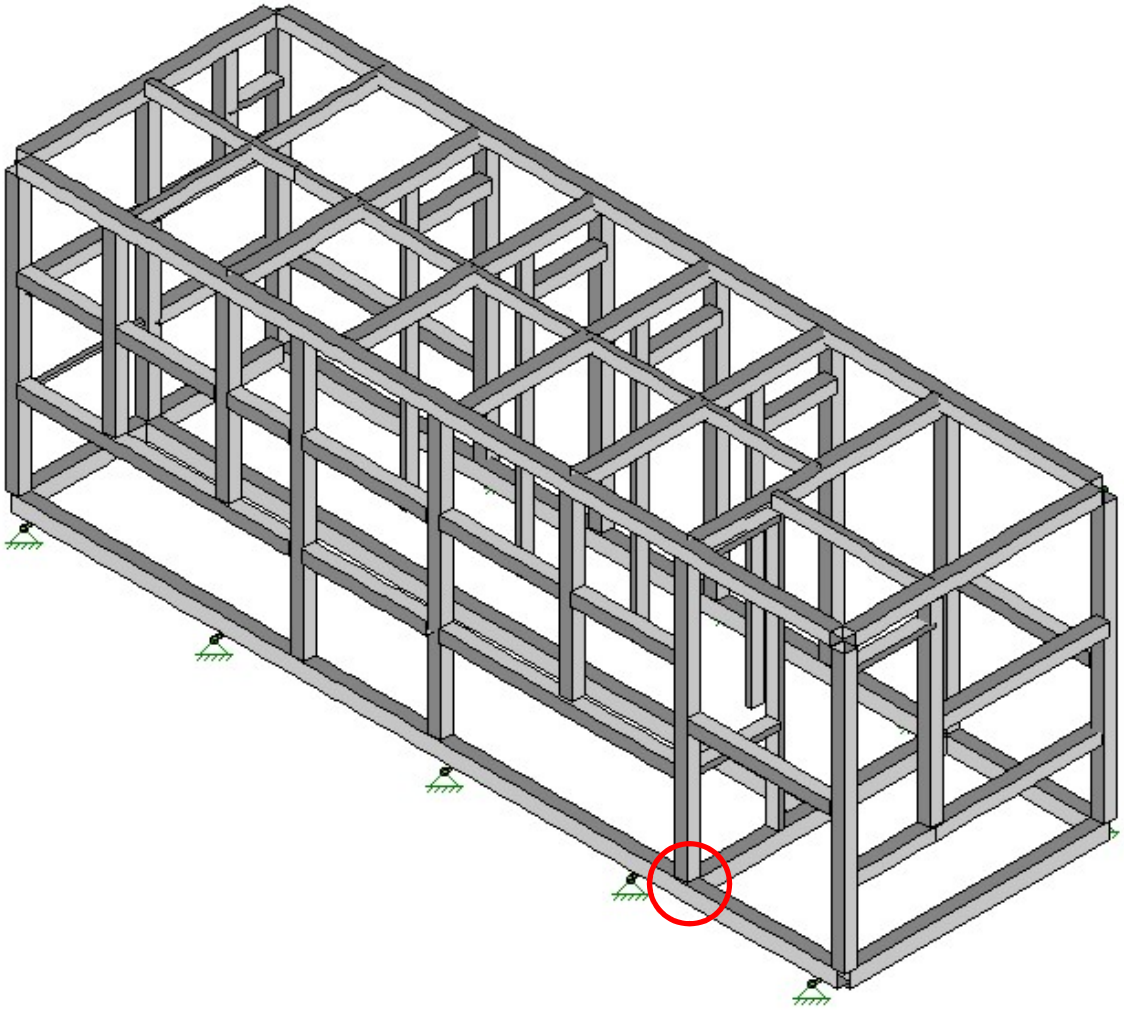

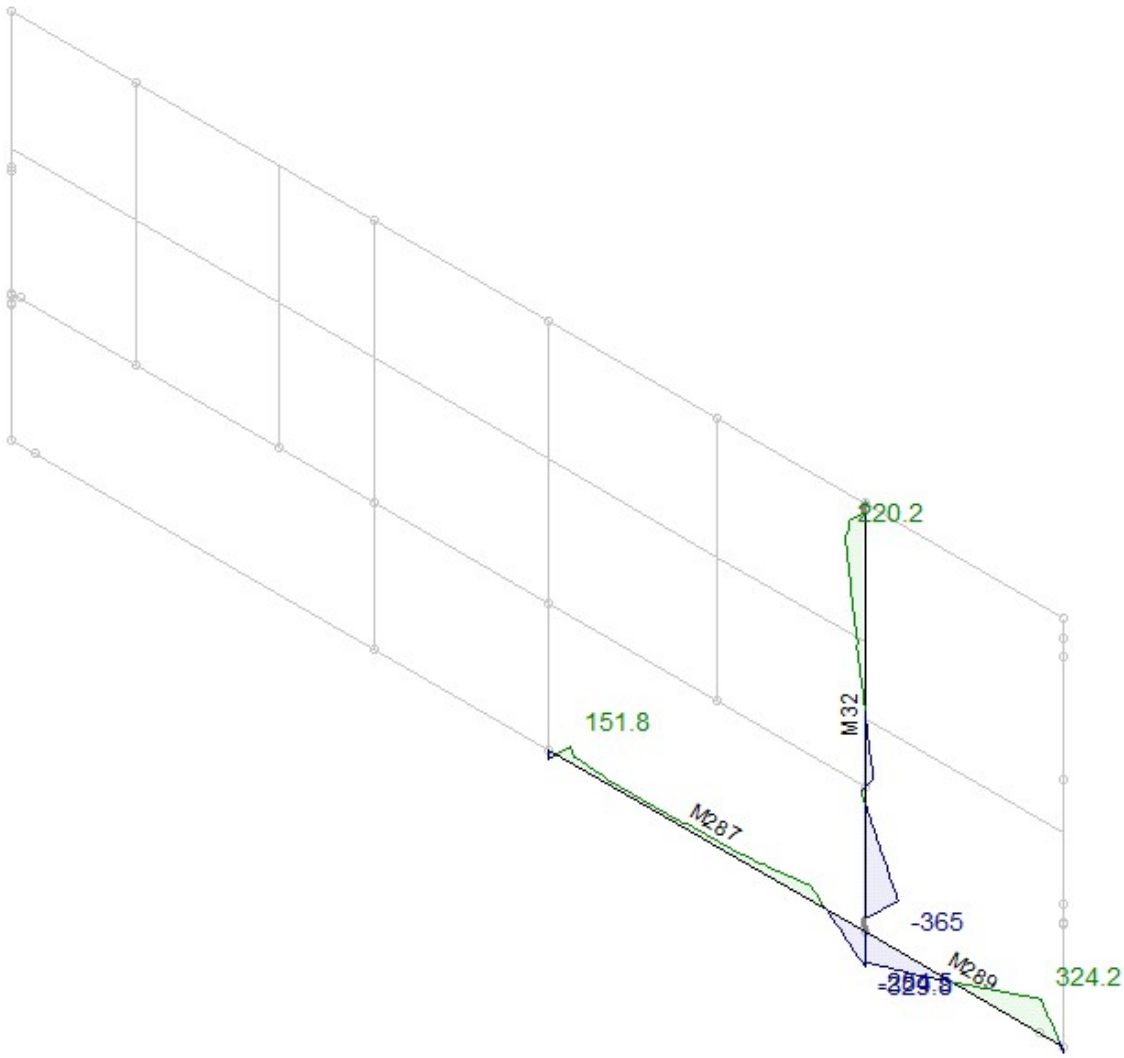


Member Section Forces (By Combination)

Sections | Maximums | End Reactions

| | Member Label | S... | Axial[k] | y Shea... | z Shea... | Torque[k-in] | y-y Moment[k-in] | z-z Moment[k-in] |
|---|---|---|---|---|---|---|---|---|
| 101 | M32 | 1 | 21.228 | -9.236 | -.582 | -21.976 | 30.041 | -364.994 |
| 102 | | 2 | 21.147 | -9.347 | -.592 | -21.976 | 21.235 | -225.555 |
| 103 | | 3 | 20.698 | -9.398 | -3.993 | -21.284 | .625 | -84.243 |
| 104 | | 4 | 10.757 | -3.869 | -4.31 | 3.776 | 37.079 | -92.655 |
| 105 | | 5 | 10.692 | -3.878 | -4.311 | 3.776 | -27.584 | -34.547 |
| 106 | | 6 | 12.586 | -4.143 | -2.158 | 5.687 | 9.837 | 18.029 |
| 107 | | 7 | 12.542 | -4.134 | -2.157 | 5.687 | -22.529 | 80.115 |
| 108 | | 8 | 9.004 | -3.693 | -3.8 | 10.628 | 18.98 | 125.078 |
| 109 | | 9 | 8.932 | -3.674 | -3.799 | 10.628 | -38.021 | 180.318 |
| 110 | | 10 | 7.01 | 3.585 | -3.477 | 1.833 | -90.867 | 170.362 |

Member Section Forces (By Combination)

Sections | Maximums | End Reactions

| | Member Label | S... | Axial[k] | y Shea... | z Shea... | Torque[k-in] | y-y Moment[k-in] | z-z Moment[k-in] |
|---|---|---|---|---|---|---|---|---|
| 851 | M287 | 1 | 10.488 | -29.363 | 18.224 | 206.667 | 178.494 | -99.336 |
| 852 | | 2 | -12.116 | 2.757 | -17.469 | 124.767 | 102.071 | 58.357 |
| 853 | | 3 | -12.103 | -.286 | .228 | 48.76 | -74.604 | 30.876 |
| 854 | | 4 | -12.103 | -.346 | .224 | 48.76 | -71.581 | 35.126 |
| 855 | | 5 | -12.102 | -.404 | .216 | 48.76 | -68.64 | 40.159 |
| 856 | | 6 | -12.101 | -.472 | .211 | 48.76 | -65.77 | 46.024 |
| 857 | | 7 | -11.964 | -2.922 | 8.667 | -3.231 | 13.016 | 76.535 |
| 858 | | 8 | -11.963 | -3.006 | 8.678 | -3.231 | 129.463 | 116.325 |
| 859 | | 9 | -7.409 | 22.349 | -15.095 | -86.429 | 86.034 | -29.933 |
| 860 | | 10 | -7.408 | 22.308 | -15.091 | -86.429 | -116.653 | -329.777 |

Member Section Forces (By Combination)

Sections | Maximums | End Reactions

| | Member Label | S... | Axial[k] | y Shea... | z Shea... | Torque[k-in] | y-y Moment[k-in] | z-z Moment[k-in] |
|---|---|---|---|---|---|---|---|---|
| 871 | M289 | 1 | -6.162 | -8.025 | 2.42 | -1.792 | -90.939 | -284.525 |
| 872 | | 2 | -6.162 | -8.041 | 2.42 | -1.792 | -70.502 | -216.68 |
| 873 | | 3 | -6.162 | -8.07 | 2.419 | -1.792 | -50.07 | -148.695 |
| 874 | | 4 | -6.207 | -9.326 | 2.907 | -11.97 | -25.745 | -72.334 |
| 875 | | 5 | -6.206 | -9.398 | 2.909 | -11.97 | -1.187 | 6.721 |
| 876 | | 6 | -6.206 | -9.479 | 2.911 | -11.97 | 23.384 | 86.423 |
| 877 | | 7 | -6.205 | -9.559 | 2.915 | -11.97 | 47.979 | 166.805 |
| 878 | | 8 | -6.205 | -9.623 | 2.918 | -11.97 | 72.602 | 247.803 |
| 879 | | 9 | .038 | 44.323 | -21.353 | -292.481 | 128.105 | 324.178 |
| 880 | | 10 | .038 | 44.3 | -21.353 | -292.481 | -52.21 | -49.998 |

## Input Parameters

Chord | Plate | Branch A | Branch B | Branch C | Branch D | Gap/Overlap

**SECTION**

Material: A1085 HSS

Yield Stress $F_y$ (ksi): 50

Tensile Strength $F_u$ (ksi): 65

Section: HSS8X6X1/2

| | | | | | |
|---|---|---|---|---|---|
| Area $A_g$ ($in^2$) | 12.400 | Height h (in) | 8.00 | Width b (in) | 6.00 |
| | | Diameter D (in) | N/A | Thickness t (in) | 0.500 |
| | | Section Modulus $S_x$ ($in^3$) | 25.8000 | Plastic Modulus $Z_x$ ($in^3$) | 32.2000 |
| Vertical | Horizontal | Section Modulus $S_y$ ($in^3$) | 21.9000 | Plastic Modulus $Z_y$ ($in^3$) | 26.4000 |

**FACTORED LOADS - Axial: Tens.(+) Comp.(-), Moment: CW(+) CCW (-)**

| | | | |
|---|---|---|---|
| Axial Left (kip) | 7.4 | Axial Right(kip) | 6.2 |
| Moment Left (kip-in) | 329.8 | Moment Right(kip-in) | -284.5 |
| Point Load (kip) | | | |

## Schematic

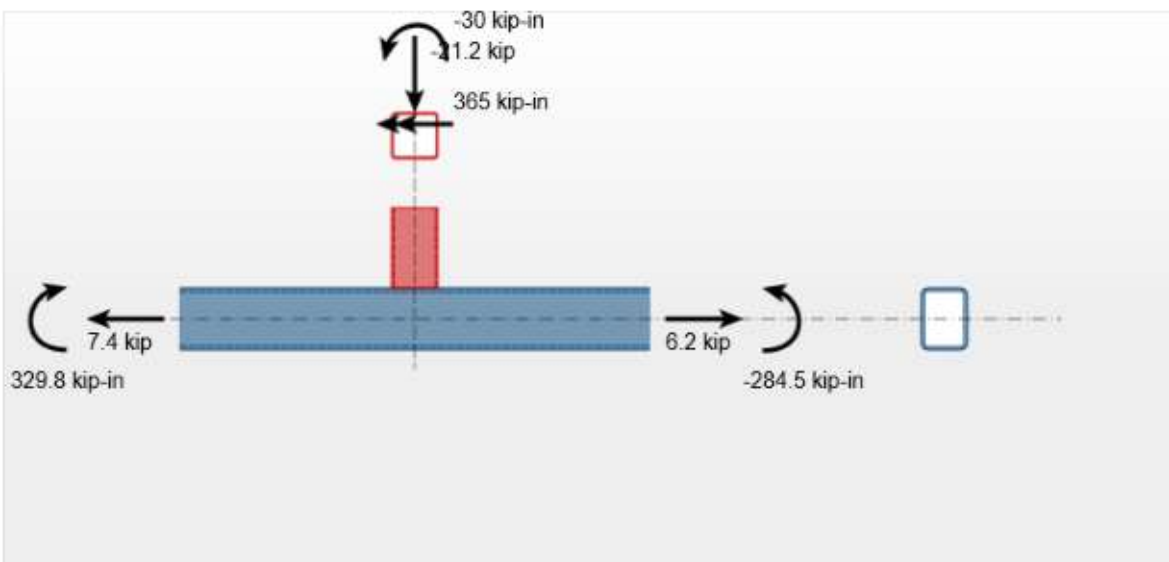

## Input Parameters

Chord | Plate | Branch A | Branch B | Branch C | Branch D | Gap/Overlap

**SECTION**

Material: A1085 HSS

Section: HSS6X6X5/16

Yield Stress $F_y$ (ksi): 50

Tensile Strength $F_u$ (ksi): 65

Area $A_g$ ($in^2$): 6.870

Height h (in): 6.00

Width b (in): 6.00

Diameter D (in): N/A

Thickness t (in): 0.313

Section Modulus $S_x$ ($in^3$): 12.1000

Plastic Modulus $Z_x$ ($in^3$): 14.5000

Vertical | Horizontal

Section Modulus $S_y$ ($in^3$): 12.1000

Plastic Modulus $Z_y$ ($in^3$): 14.5000

**GEOMETRY**

Branch Angle θ (deg): 90

**FACTORED LOADS - Axial: Tens.(+) Comp.(-), Moment: CW(+) CCW (-)**

Axial (kip): -21.2

In-Plane Moment (kip-in): -30

Out-of-Plane Moment (kip-in): 365

## Schematic

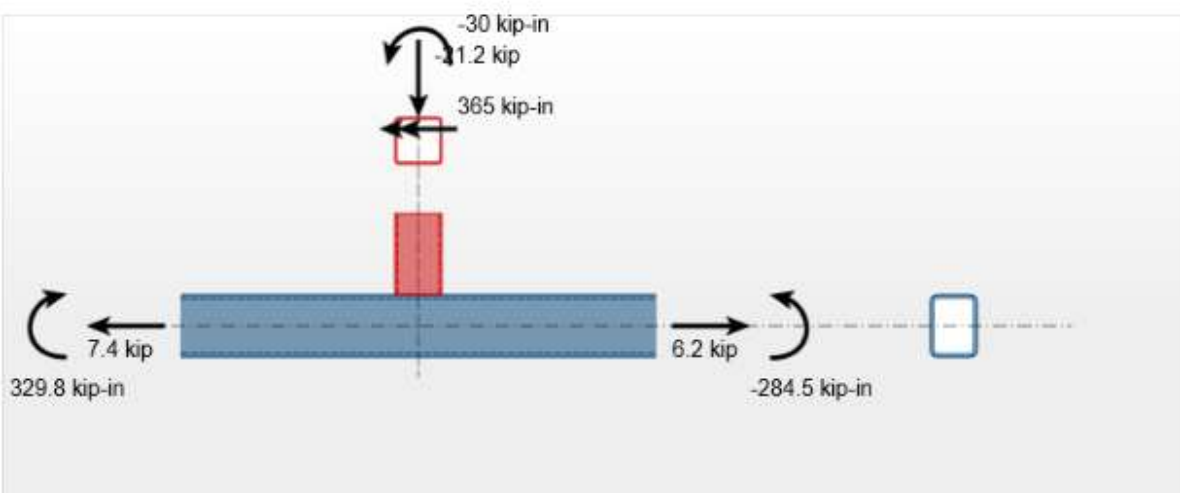

## Results

**Connection OK**

Branch A ----------
Total Factored Axial Load Pr = -21.2 kip
--Y-Connection - 100%
----Factored Axial Load (Y) Pr = -21.2 kip
----Factored Axial Load Capacity (Y) Pc = 309.2 kip
Axial Load Interaction = 0.069
Factored In-Plane Moment Mrip = -30 kip-in
Factored In-Plane Moment Capacity Mcip = 652.5 kip-in
In-Plane Moment Interaction = 0.046
Factored Out-of-Plane Moment Mrop = 365 kip-in
Factored Out-of-Plane Moment Capacity Mcop = 652.5 kip-in
Out-of-Plane Moment Interaction = 0.559
Axial/Moment INTERACTION = 0.674

OVERALL INTERACTION -- 0.674

| | | | |
|---|---|---|---|
| client | Avantech | by SMV | sheet no. 133 |
| project | TSCR Process Enclosure | date 5/19 | |
| location | Hanford | checked | job no. |
| subject | End Frame Knee Joint | date | 39001 |

**END FRAME KNEE JOINTS - DESIGN FORCES WITH OVERSTRENGTH FACTOR**

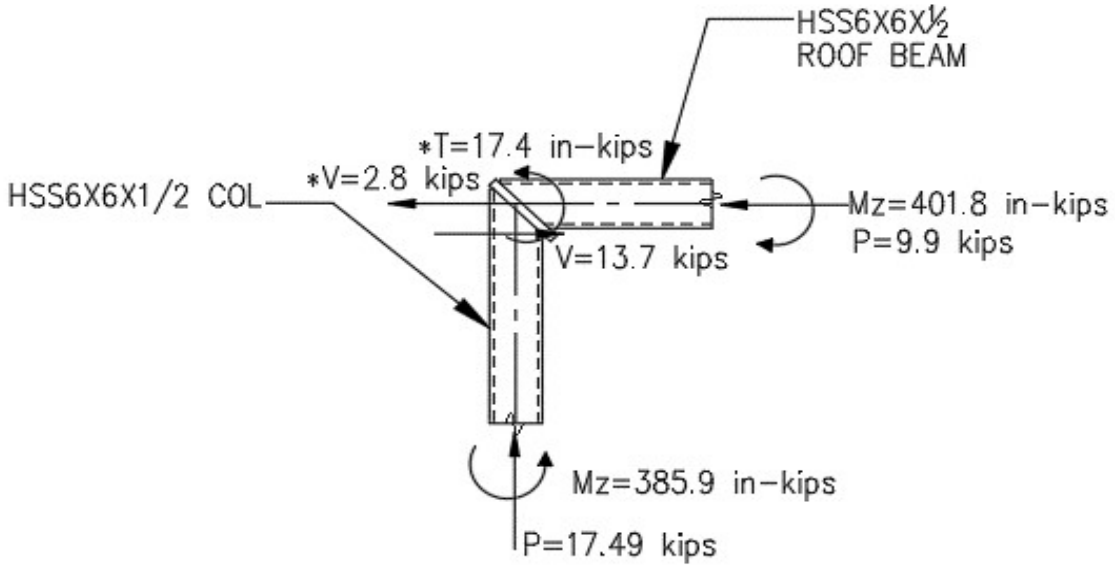


ROOF KNEE JOINT

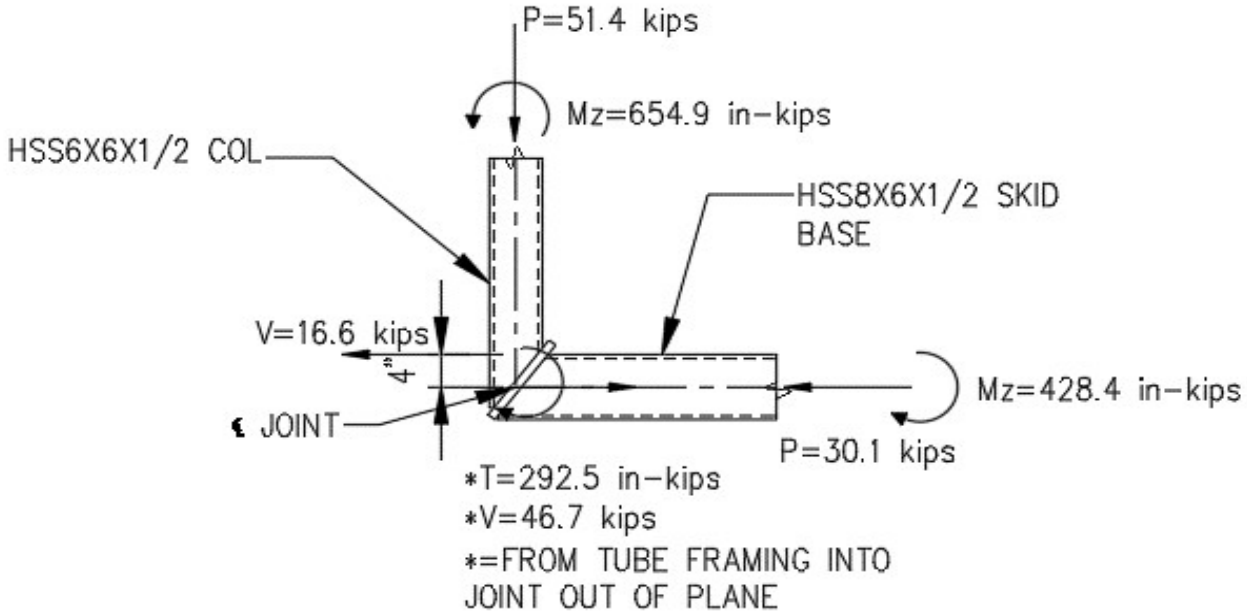


BASE KNEE JOINT

FORCES BASED ON RISA RUN
R12-MAJOR FRAMING-OVS-LC73-5-11-19

**From CIDECT Design Guide 3, Page 67**

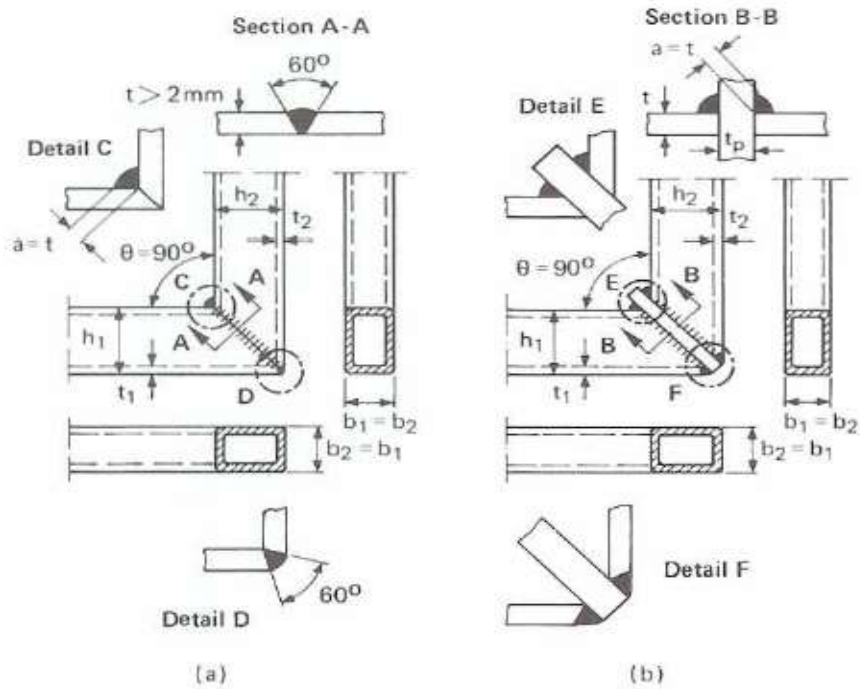


Figure 5.8 – Details of RHS knee joints
(a) Unstiffened
(b) With a transverse stiffening plate

Mang et al. (1980) recommend that these joints be designed based on the following requirements for both members:

$$\frac{N_i}{N_{pl,i}} + \frac{M_i}{M_{pl,i}} \leq \alpha \qquad \text{(with i = 1 or 2, see figure 5.8)} \qquad 5.16$$

where:
$N_{pl,i}$ = axial yield capacity of a member, either in compression or tension as applicable.
$M_{pl,i}$ = plastic moment capacity of member i.
$\alpha$ = a stress reduction factor, which can be taken as 1.0 for mitred joints with stiffening plates. For the mitred joints without stiffening plates, $\alpha$ is a function of the cross sectional parameters as shown in figures 5.9 and 5.10.

| | | | |
|---|---|---|---|
| client | Avantech | by SMV | sheet no. 135 |
| project | TSCR Process Enclosure | date 5/19 | |
| location | Hanford | checked | job no. |
| subject | End Frame Knee Joint | date | 39001 |

## DIMENSIONS AND SECTION PROPERTIES OF SQUARE HSS

| Shape | Design Wall Thickness, t | Nominal Wt | Area, A | b/t | h/t | I | S | r | Z | Torsion J | Torsion C | Surface Area |
|---|---|---|---|---|---|---|---|---|---|---|---|---|
| | in. | lb/ft | in.² | | | in.⁴ | in.³ | in. | in.³ | in.⁴ | in.³ | ft²/ft |
| HSS6X6X5/8 | 0.625 | 42.30 | 12.4 | 6.00 | 6.00 | 57.4 | 19.1 | 2.15 | 24.3 | 99.5 | 35.2 | 1.82 |
| X1/2 | 0.500 | 35.24 | 10.4 | 8.40 | 8.40 | 50.5 | 16.8 | 2.20 | 20.9 | 85.6 | 29.8 | 1.86 |
| X3/8 | 0.375 | 27.48 | 8.08 | 12.8 | 12.8 | 41.6 | 13.9 | 2.27 | 16.8 | 68.5 | 23.5 | 1.89 |
| X5/16 | 0.313 | 23.34 | 6.87 | 16.0 | 16.0 | 36.3 | 12.1 | 2.30 | 14.5 | 59.0 | 20.1 | 1.91 |
| X1/4 | 0.250 | 19.02 | 5.59 | 20.8 | 20.8 | 30.3 | 10.1 | 2.33 | 11.9 | 48.5 | 16.5 | 1.93 |
| X3/16 | 0.188 | 14.53 | 4.28 | 28.7 | 28.7 | 23.8 | 7.93 | 2.36 | 9.26 | 37.5 | 12.7 | 1.95 |

ASTM A1085 Fy= 50.00 ksi
A= 10.40 in2
$N_{PL1}$= 520.00 kips HSS6x6x1/2 Axial Yield Capacity

Z= 20.90 in3
$M_{PL1}$= 1045.00 in-kip HSS6x6x1/2 Moment Capacity

$N_1$= 51.40 kips Max Axial Load
$M_1$= 654.90 in-kip Max Moment

$N_1/N_{PL1} + M_1/M_{PL1}$ = 0.73 OK <=1 FOR MITRED JOINT

Mang et al. (1980) recommend that these joints be designed based on the following requirements for both members:

$$\frac{N_i}{N_{pl,i}} + \frac{M_i}{M_{pl,i}} \leq \alpha \qquad \text{(with i = 1 or 2, see figure 5.8)} \qquad 5.16$$

where:
$N_{pl,i}$ = axial yield capacity of a member, either in compression or tension as applicable.
$M_{pl,i}$ = plastic moment capacity of member i.
$\alpha$ = a stress reduction factor, which can be taken as 1.0 for mitred joints with stiffening plates. For the mitred joints without stiffening plates, $\alpha$ is a function of the cross sectional parameters as shown in figures 5.9 and 5.10.

# PROCESS ENCLOSURE - LINER PLATE ANALYSIS

**Discussion:** The Process Enclosure contains inner wall liner plates for spray containment. These plates will be subjected to shear forces during a seismic event. The inner wall liner plates, including major penetrations, have been added to the Risa 3D Model of the Process Enclosure, as shown below. The Risa 3D model with plates will be analyzed to determine maximum shear and Von-Mises stresses. An Envelope Analyis using Load Combinations 250-277 with Overstrength Factor will be performed. The worst case shear stresses will be compared to the theoretical buckling stress of the plate sections. The theoretical plate shear buckling stresses can be calculated per Reference 7 and as shown on the following pages. Stiffeners will be added to the liner plates as required to prevent buckling. See analysis pages for added stiffeners.

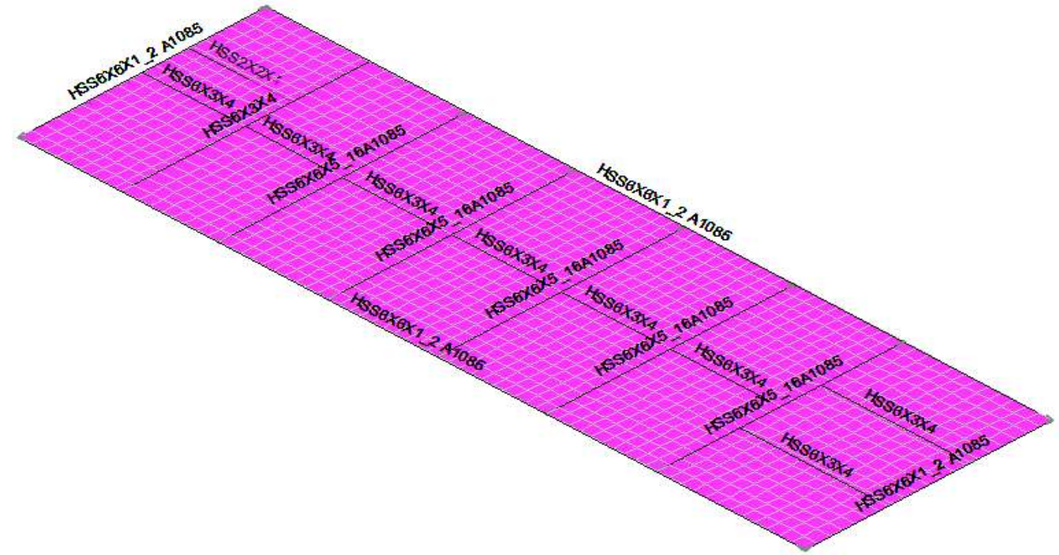


**ROOF LINER PLATES**

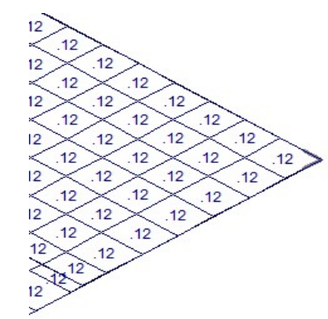


**ROOF TYPICAL PLATE THICKNESS**

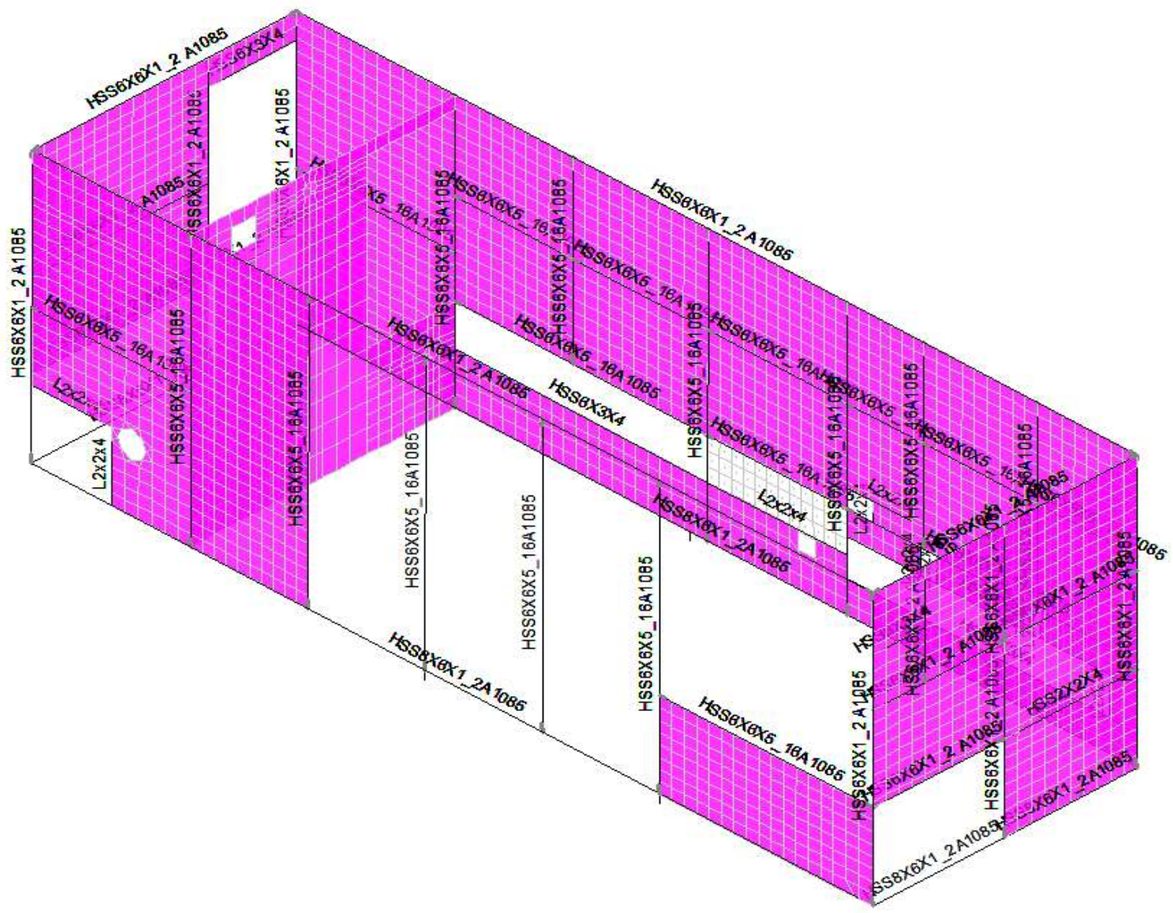


**WALL LINER PLATES**

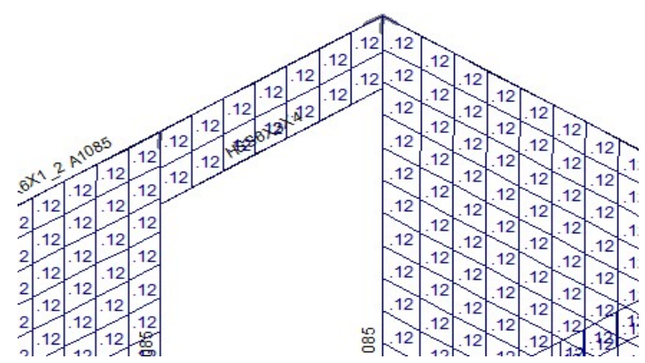


**WALL TYPICAL PLATE THICKNESS**

## PER REFERENCE 7, SSRC GUIDE 2009 - CHAPTER 4

### 4.2.1 Uniform Compression

*Long Rectangular Plates.* In 1891, Bryan (1891) presented the analysis of the elastic critical stress for a rectangular plate simply supported along all edges and subjected to a uniform longitudinal compressive stress. The elastic critical stress of a long plate segment is determined by the plate width-to-thickness ratio $b/t$, by the restraint conditions along the longitudinal boundaries, and by the elastic material properties (elastic modulus, E, and Poisson's ratio ν). The elastic critical stress, $\sigma_c$, is expressed as

$$\sigma_c = k\frac{\pi^2 E}{12(1-\nu^2)(b/t)^2} \qquad (4.1)$$

in which $k$ is a *plate buckling coefficient* determined by a theoretical critical-load analysis; $k$ is a function of plate geometry and boundary conditions such as those shown in Fig. 4.2.

### 4.2.3 Shear

When a plate is subjected to edge shear stresses as shown in Fig. 4.6, it is said to be in a state of *pure shear.* The critical shear buckling stress can be obtained by substituting $\tau_c$ and $k_s$, for $\sigma_c$ and $k$ in Eq. 4.1, in which $k_s$ is the buckling coefficient for shear buckling stress. Critical stress coefficients, $k_s$, for plates subjected to pure shear have been evaluated for three conditions of edge support. In Fig. 4.9 these are plotted with the side $b$, as used in Eq. 4.1, always assumed to be shorter than side $a$. Thus $\alpha$ is always greater than 1 and by plotting $k_s$ in terms of $1/\alpha$, the complete range of $k_s$ can be shown and the magnitude of $k_s$ remains manageable for small values of $\alpha$. However, for application to plate-girder design it is convenient to define $b$ (or $h$ in plate-girder applications) as the vertical dimension of the plate-girder web for a horizontal girder. Then $\alpha$ may be greater or less than unity and empirical formulas for $k_s$ together with source data are as follows:

*Plate Simply Supported on Four Edges.* Solutions developed by Timoshenko (1910), Bergmann and Reissner (1932), and Seydel (1933) are approximated by Eqs. 4.3a and 4.3b, in which $\alpha = a/b$:

$$k_s = \begin{cases} 4.00 + \dfrac{5.34}{\alpha^2} & \text{for } \alpha \le 1 \quad (4.3a) \\ 5.34 + \dfrac{4.00}{\alpha^2} & \text{for } \alpha \ge 1 \quad (4.3b) \end{cases}$$

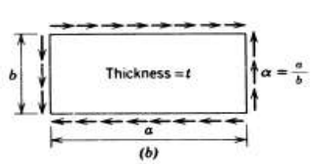


**Fig. 4.6 Plate buckling coefficients for plates in pure shear. (Side b is the short side.)**

*Plate Clamped on Four Edges.* In 1924, Southwell and Skan obtained $k_s = 8.98$ for the case of the infinitely long rectangular plate with clamped edges. For the finite-length rectangular plate with clamped edges, Moheit (1939) obtained

$$k_s = \begin{cases} 5.6 + \dfrac{8.98}{\alpha^2} & \text{for } \alpha \le 1 \quad (4.4a) \\ 8.98 + \dfrac{5.6}{\alpha^2} & \text{for } \alpha \ge 1 \quad (4.4b) \end{cases}$$

## Sample Calculation - Process Enclosure Liner Plate Theoretical Shear Buckling Stress

**Elastic critical stress:** $\sigma_c = k(\pi^2 E / 12(1-\nu^2)(b/t)^2)$ SSRC Guide Eqn. (4.1)

| | | | |
|---|---|---|---|
| length, a = | 82.00 in | | |
| width, b = | 58.00 in | | |
| thickness, t = | 0.125 in | 0.250 in | |
| $\alpha$ = a/b | 1.41 | | |
| $\Pi$ = | 3.141593 | | |
| $E$ = | 29000 ksi | | |
| $\nu$ = | 0.3 | | |
| **For a plate fixed on four edges:** | | | |
| $k_s = 5.6+(8.98/\alpha^2)$ = | NA | for $\alpha$ <= 1 | Eqn (4.4a) |
| $k_s = 8.98+(5.6/\alpha^2)$ = | 11.78 | for $\alpha$ >= 1 | Eqn (4.4b) |
| $k_s$ (fixed)= | 11.78 | | |
| $\sigma_c$= | 1.43 ksi | For 0.125 in Pl | |
| $\sigma_c$= | 5.74 ksi | For 0.250 in Pl | |
| **For a plate simply supported on four edges:** | | | |
| $k_s = 4.00+(5.34/\alpha^2)$ = | NA | for $\alpha$ <= 1 | Eqn (4.3a) |
| $k_s = 5.34+(4.00/\alpha^2)$ = | 7.34 | for $\alpha$ >=1 | Eqn (4.3b) |
| $k_s$ (SS)= | 7.34 | | |
| $\sigma_c$= | 0.89 ksi | For 0.125 in Pl | |
| $\sigma_c$= | 3.57 ksi | For 0.250 in Pl | |

## Risa 3D Load Combinations

| | | | | | | | | | | | | | | | | | | | | |
|---|---|---|---|---|---|---|---|---|---|---|---|---|---|---|---|---|---|---|---|---|
| 250 | LOAD COMBINATIONS FOR PLATE BUCKLING ANALYSIS | ☐ | | | | | | | | | | | | | | | | | | |
| 251 | Seismic Strength Comb with Overstrength Factor | ☐ | | | | | | | | | | | | | | | | | | |
| 252 | ASCE Strength 5 (os-a) | ☑ | Y | | DL | 1.2 | $S_{DS}$*DL | .2 | ELX | 2 | LL | .5 | LLS | 1 | SL | .2 | SLN | .2 | | |
| 253 | ASCE Strength 5 (os-b) | ☑ | Y | | DL | 1.2 | $S_{DS}$*DL | .2 | ELZ | 2 | LL | .5 | LLS | 1 | SL | .2 | SLN | .2 | | |
| 254 | ASCE Strength 5 (os-c) | ☑ | Y | | DL | 1.2 | $S_{DS}$*DL | .2 | ELX | -2 | LL | .5 | LLS | 1 | SL | .2 | SLN | .2 | | |
| 255 | ASCE Strength 5 (os-d) | ☑ | Y | | DL | 1.2 | $S_{DS}$*DL | .2 | ELZ | -2 | LL | .5 | LLS | 1 | SL | .2 | SLN | .2 | | |
| 256 | ASCE Strength 7 (os-a) | ☑ | Y | | DL | .9 | $S_{DS}$*DL | -.2 | ELX | 2 | | | | | | | | | | |
| 257 | ASCE Strength 7 (os-b) | ☑ | Y | | DL | .9 | $S_{DS}$*DL | -.2 | ELZ | 2 | | | | | | | | | | |
| 258 | ASCE Strength 7 (os-c) | ☑ | Y | | DL | .9 | $S_{DS}$*DL | -.2 | ELX | -2 | | | | | | | | | | |
| 259 | ASCE Strength 7 (os-d) | ☑ | Y | | DL | .9 | $S_{DS}$*DL | -.2 | ELZ | -2 | | | | | | | | | | |
| 260 | | ☐ | | | | | | | | | | | | | | | | | | |
| 261 | Orthog Seismic Strength Comb with Overstrength | ☐ | | | | | | | | | | | | | | | | | | |
| 262 | ASCE Strength 5 (os-a) | ☑ | Y | | DL | 1.2 | $S_{DS}$*DL | .2 | ELX | 2 | ELZ | .6 | LL | .5 | LLS | 1 | SL | .2 | SLN | .2 |
| 263 | ASCE Strength 5 (os-b) | ☑ | Y | | DL | 1.2 | $S_{DS}$*DL | .2 | ELZ | 2 | ELX | .6 | LL | .5 | LLS | 1 | SL | .2 | SLN | .2 |
| 264 | ASCE Strength 5 (os-c) | ☑ | Y | | DL | 1.2 | $S_{DS}$*DL | .2 | ELX | 2 | ELZ | -.6 | LL | .5 | LLS | 1 | SL | .2 | SLN | .2 |
| 265 | ASCE Strength 5 (os-d) | ☑ | Y | | DL | 1.2 | $S_{DS}$*DL | .2 | ELZ | 2 | ELX | -.6 | LL | .5 | LLS | 1 | SL | .2 | SLN | .2 |
| 266 | ASCE Strength 5 (os-e) | ☑ | Y | | DL | 1.2 | $S_{DS}$*DL | .2 | ELX | -2 | ELZ | -.6 | LL | .5 | LLS | 1 | SL | .2 | SLN | .2 |
| 267 | ASCE Strength 5 (os-f) | ☑ | Y | | DL | 1.2 | $S_{DS}$*DL | .2 | ELZ | -2 | ELX | -.6 | LL | .5 | LLS | 1 | SL | .2 | SLN | .2 |
| 268 | ASCE Strength 5 (os-g) | ☑ | Y | | DL | 1.2 | $S_{DS}$*DL | .2 | ELX | -2 | ELZ | .6 | LL | .5 | LLS | 1 | SL | .2 | SLN | .2 |
| 269 | ASCE Strength 5 (os-h) | ☑ | Y | | DL | 1.2 | $S_{DS}$*DL | .2 | ELZ | -2 | ELX | .6 | LL | .5 | LLS | 1 | SL | .2 | SLN | .2 |
| 270 | ASCE Strength 7 (os-a) | ☑ | Y | | DL | .9 | $S_{DS}$*DL | -.2 | ELX | 2 | ELZ | .6 | | | | | | | | |
| 271 | ASCE Strength 7 (os-b) | ☑ | Y | | DL | .9 | $S_{DS}$*DL | -.2 | ELZ | 2 | ELX | .6 | | | | | | | | |
| 272 | ASCE Strength 7 (os-c) | ☑ | Y | | DL | .9 | $S_{DS}$*DL | -.2 | ELX | 2 | ELZ | -.6 | | | | | | | | |
| 273 | ASCE Strength 7 (os-d) | ☑ | Y | | DL | .9 | $S_{DS}$*DL | -.2 | ELZ | 2 | ELX | -.6 | | | | | | | | |
| 274 | ASCE Strength 7 (os-e) | ☑ | Y | | DL | .9 | $S_{DS}$*DL | -.2 | ELX | -2 | ELZ | -.6 | | | | | | | | |
| 275 | ASCE Strength 7 (os-f) | ☑ | Y | | DL | .9 | $S_{DS}$*DL | -.2 | ELZ | -2 | ELX | -.6 | | | | | | | | |
| 276 | ASCE Strength 7 (os-g) | ☑ | Y | | DL | .9 | $S_{DS}$*DL | -.2 | ELX | -2 | ELZ | .6 | | | | | | | | |
| 277 | ASCE Strength 7 (os-h) | ☑ | Y | | DL | .9 | $S_{DS}$*DL | -.2 | ELZ | -2 | ELX | .6 | | | | | | | | |

# PROCESS ENCLOSURE - LINER PLATE ANALYSIS -RISA 3D LC 265 - ORTHOGONAL SEISMIC WITH "+Z" DIRECTION PRIMARY

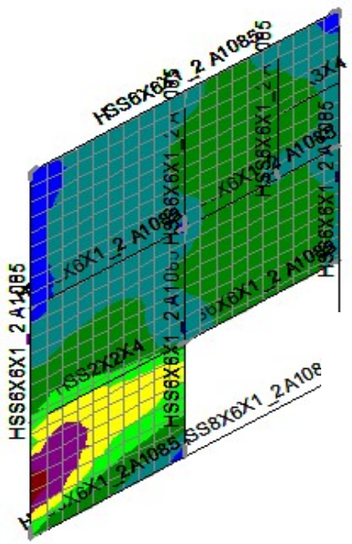


RIGHT SIDE WALL

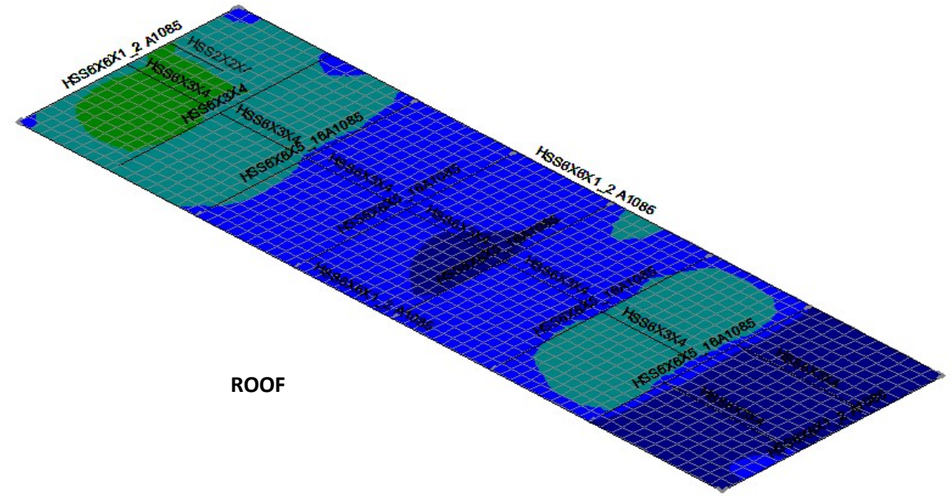


ROOF

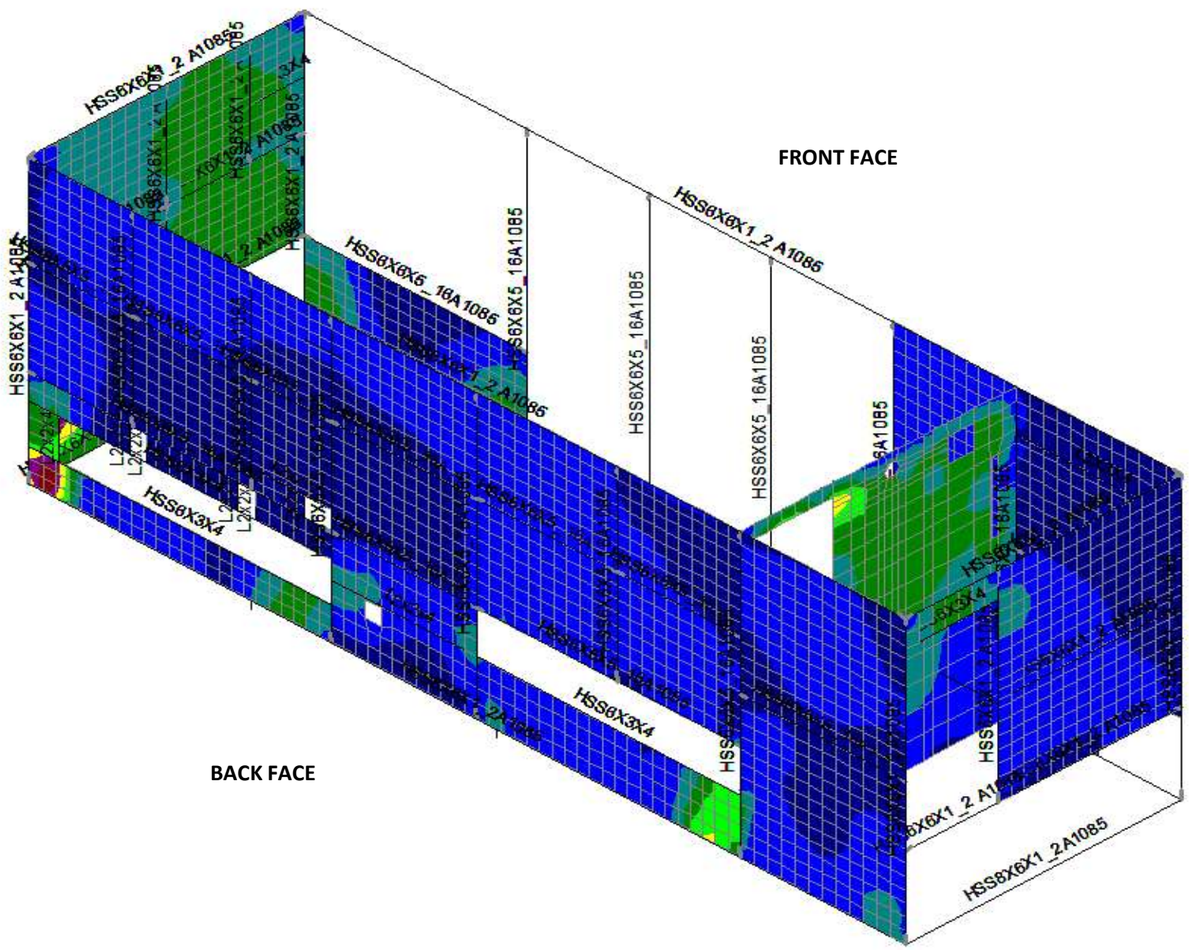


FRONT FACE

BACK FACE

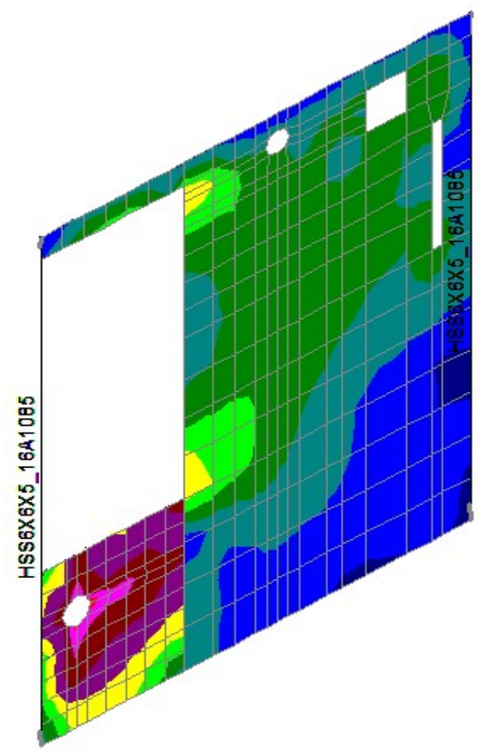


AIRLOCK INNER WALL

Plate
Tau Top
ksi
( LC 265 )

- 11.7
- 10.5
- 9.3
- 8.1
- 6.9
- 5.7
- 4.5
- 3.3
- 2.1
- .9
- -.3

# PROCESS ENCLOSURE - LINER PLATE ANALYSIS -RISA 3D LC 264 - ORTHOGONAL SEISMIC WITH "+X" DIRECTION PRIMARY

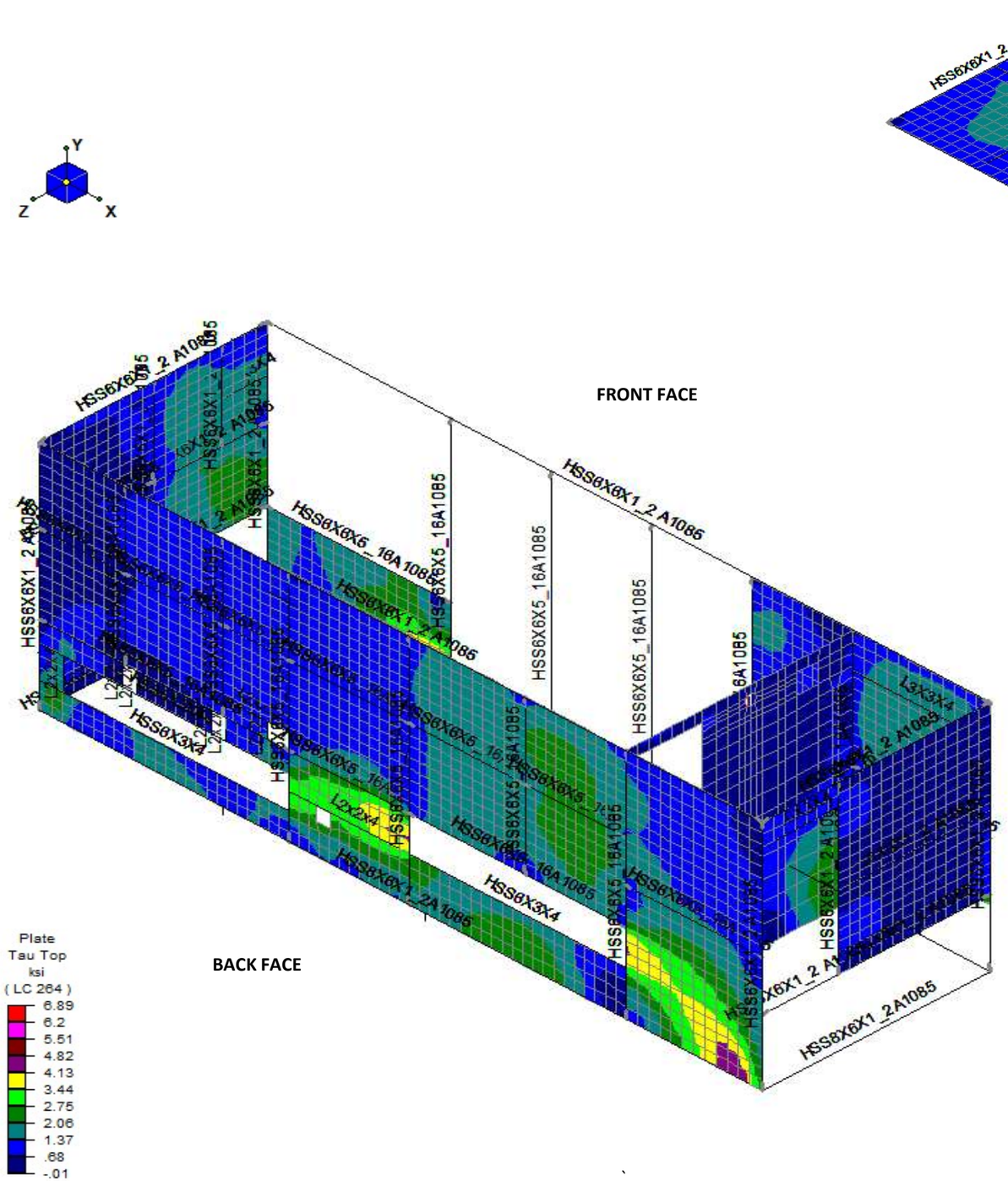


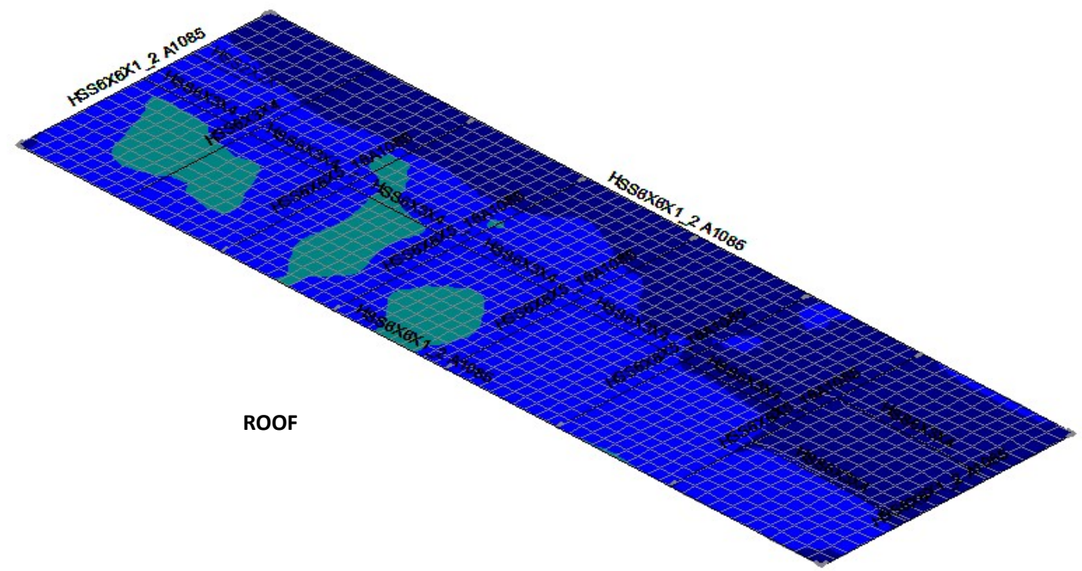


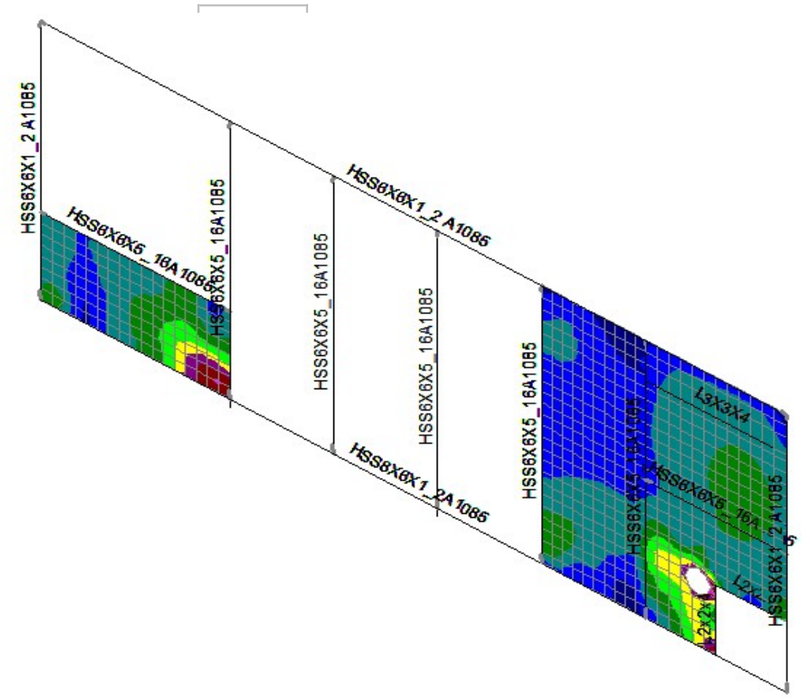


**FRONT FACE**

# Front View Inner Skin Plates - Maximum Stresses with Overstrength Factor

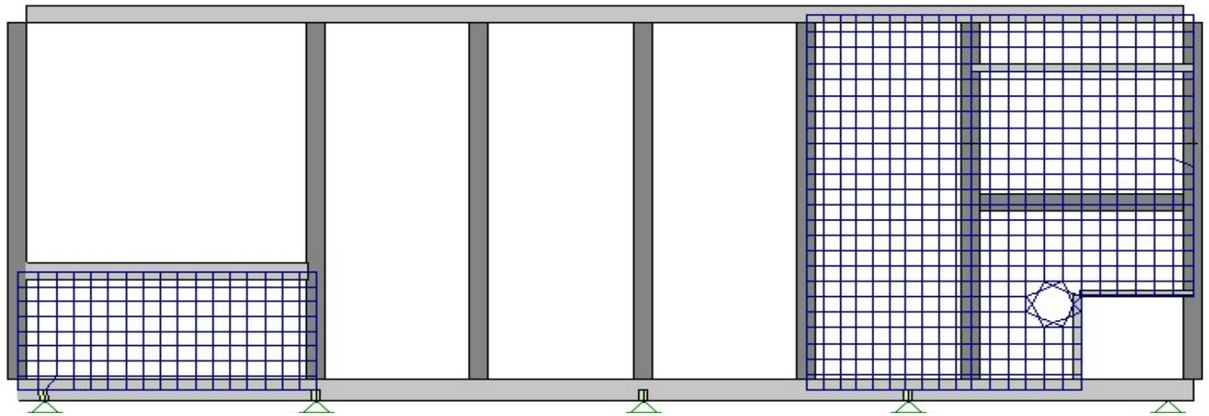

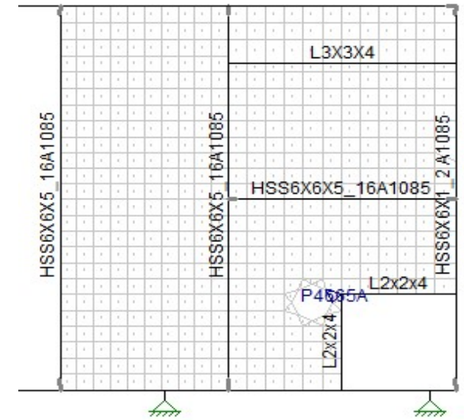


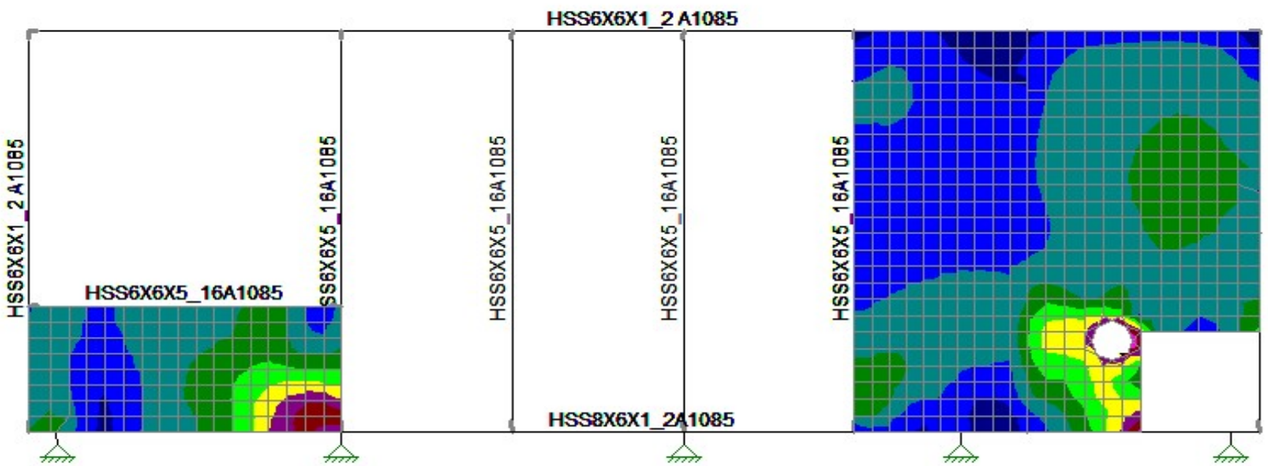


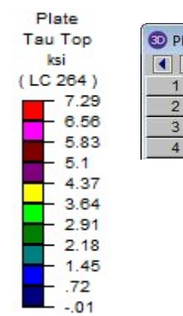


Plate Principal Stresses (By Combination)

| | L... | Plate Label | Loc | Sigma1[ksi] | Sigma2[ksi] | Tau Max[... | Angle[rad] | Von Mises[ksi] |
|---|---|---|---|---|---|---|---|---|
| 1 | 264 | P4665A | T | 9.688 | -8.435 | 9.061 | -.515 | 15.707 |
| 2 | | | B | 9.693 | -8.314 | 9.004 | -.509 | 15.61 |
| 3 | 264 | P4671 | T | 12.166 | -2.796 | 7.481 | 1.136 | 13.779 |
| 4 | | | B | 12.166 | -2.796 | 7.481 | 1.136 | 13.779 |

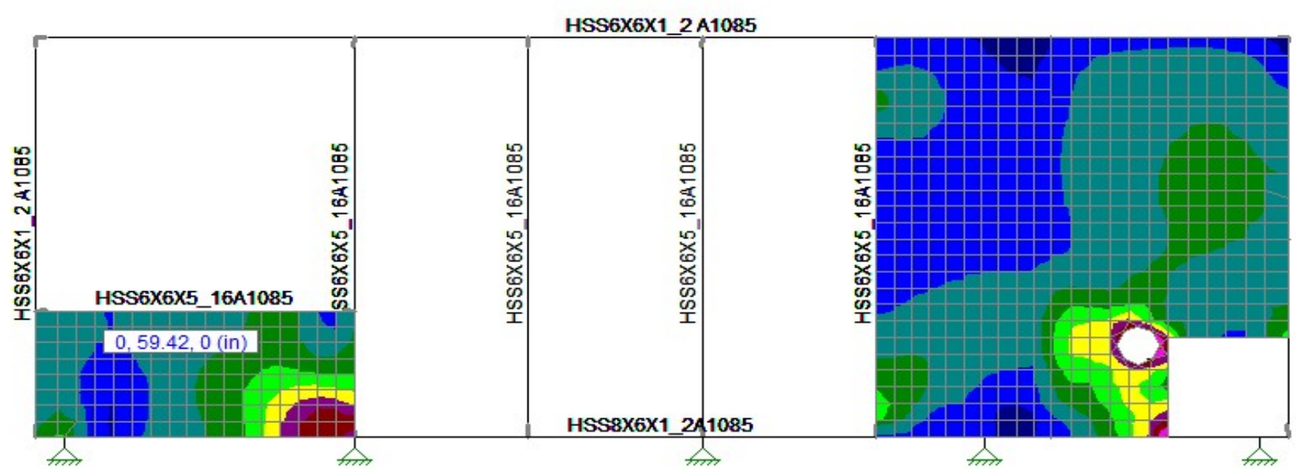


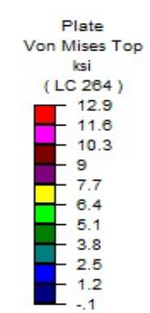


Plate Principal Stresses (By Combination)

| | L... | Plate Label | Loc | Sigma1[ksi] | Sigma2[ksi] | Tau Max[... | Angle[rad] | Von Mises[ksi] |
|---|---|---|---|---|---|---|---|---|
| 1 | 264 | P4665A | T | 9.688 | -8.435 | 9.061 | -.515 | 15.707 |
| 2 | | | B | 9.693 | -8.314 | 9.004 | -.509 | 15.61 |
| 3 | 264 | P4660B | T | 14.65 | .533 | 7.059 | .006 | 14.391 |
| 4 | | | B | 14.65 | .533 | 7.059 | .006 | 14.391 |

# Front View Inner Skin Plates

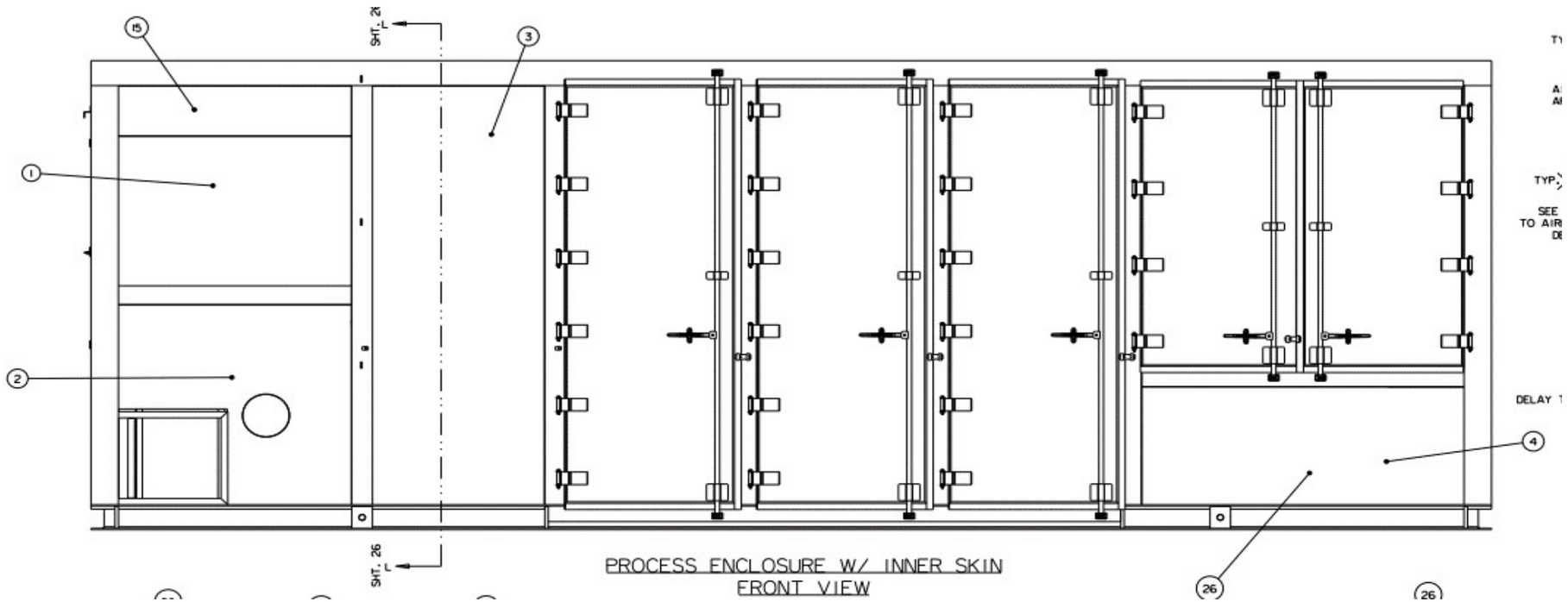


**Plates - Theoretical Shear Buckling Stresses**

| Plate No. | Thickness | Length, a | Width, b | $\alpha$ | $1/\alpha$ | Ks (fixed) | $\sigma_c$ (fixed) | Stiffener Spacing |
|---|---|---|---|---|---|---|---|---|
| 1 | 0.120 | 67.875 | 47.750 | 1.421 | 0.70 | 11.75 | 1.95 ksi | 18X18 |
| 2 | 0.120 | 67.875 | 63.875 | 1.063 | 0.94 | 13.94 | 1.29 ksi | 18X18 |
| 3 | 0.120 | 50.125 | 133.875 | 0.374 | 2.67 | 69.66 | 1.47 ksi | 18X18 |
| 4 | 0.120 | 93.875 | 37.625 | 2.495 | 0.40 | 9.88 | 2.63 ksi | 18X18 |
| 15 | 0.120 | 67.875 | 15.875 | 4.276 | 0.23 | 9.29 | 13.91 ksi | 18X18 |
| Stiff Spacing = | 0.120 | 18.000 | 18.000 | 1.000 | 1.00 | 14.58 | 16.98 ksi | **Stiffener Spacing to Prevent Buckling** |

Plate Principal Stresses (By Combination)

| | L... | Plate Label | Loc | Sigma1[ksi] | Sigma2[ksi] | Tau Max[... | Angle[rad] | Von Mises[ksi] |
|---|---|---|---|---|---|---|---|---|
| 1 | 264 | P4665A | T | 9.688 | -8.435 | 9.061 | -.515 | 15.707 |
| 2 | | | B | 9.693 | -8.314 | 9.004 | -.509 | 15.61 |
| 3 | 264 | P4671 | T | 12.166 | -2.796 | 7.481 | 1.136 | 13.779 |
| 4 | | | B | 12.166 | -2.796 | 7.481 | 1.136 | 13.779 |

Plate Principal Stresses (By Combination)

| | L... | Plate Label | Loc | Sigma1[ksi] | Sigma2[ksi] | Tau Max[... | Angle[rad] | Von Mises[ksi] |
|---|---|---|---|---|---|---|---|---|
| 1 | 264 | P4665A | T | 9.688 | -8.435 | 9.061 | -.515 | 15.707 |
| 2 | | | B | 9.693 | -8.314 | 9.004 | -.509 | 15.61 |
| 3 | 264 | P4660B | T | 14.65 | .533 | 7.059 | .006 | 14.391 |
| 4 | | | B | 14.65 | .533 | 7.059 | .006 | 14.391 |

| ITEM | QTY | DESCRIPTION | SPEC AND/OR PART NO | WRPS QL |
|---|---|---|---|---|
| 25 | 1 | SHEET METAL, 30-3/8" X 37-7/8" X 11 GAUGE, C.S. | ASTM A1011 TYPE B | 2 |
| 24 | 1 | SHEET METAL, 41-3/8" X 30-3/8" X 11 GAUGE, C.S., SEE ITEM 24 DETAIL ON SHT. 30 | ASTM A1011 TYPE B | 2 |
| 23 | 1 | SHEET METAL, 43-7/8" X 41-3/8" X 11 GAUGE, C.S. | ASTM A1011 TYPE B | 2 |
| 22 | 1 | SHEET METAL, 42-5/8" X 36-3/8" X 11 GAUGE, C.S., SEE ITEM 22 DETAIL ON SHT. 30 | ASTM A1011 TYPE B | 2 |
| 21 | 2 | SHEET METAL, 54-3/8" X 37-7/8" X 11 GAUGE, C.S. | ASTM A1011 TYPE B | 2 |
| 20 | 2 | SHEET METAL, 43-7/8" X 37-7/8" X 11 GAUGE, C.S. | ASTM A1011 TYPE B | 2 |
| 19 | 1 | SHEET METAL, 16-3/8" X 9-7/8" X 11 GAUGE, C.S. | ASTM A1011 TYPE B | 2 |
| 18 | 1 | SHEET METAL, 29-3/8" X 8-1/8" X 11 GAUGE, C.S. | ASTM A1011 TYPE B | 2 |
| 17 | 1 | SHEET METAL, 40-1/2" X 8-1/8" X 11 GAUGE, C.S. | ASTM A1011 TYPE B | 2 |
| 16 | 1 | SHEET METAL, 43" X 8-1/8" X 11 GAUGE, C.S. | ASTM A1011 TYPE B | 2 |
| 15 | 1 | SHEET METAL, 67-7/8 X 15-7/8" X 11 GAUGE, C.S. | ASTM A1011 TYPE B | 2 |
| 14 | 1 | SHEET METAL, 2-1/4" X 36-3/8" X 11 GAUGE, C.S., SEE ITEM 14 DETAIL ON SHT. 31 | ASTM A1011 TYPE B | 2 |
| 13 | 1 | SHEET METAL, 135-7/8" X 81-7/8" X 11 GAUGE, C.S., SEE ITEM 13 DETAIL ON SHT. 31 | ASTM A1011 TYPE B | 2 |
| 12 | 2 | SHEET METAL, 67-7/8" X 63-3/8" X 11 GAUGE, C.S. | ASTM A1011 TYPE B | 2 |
| 11 | 1 | SHEET METAL, 60-1/2" X 37-7/8" X 11 GAUGE, C.S. | ASTM A1011 TYPE B | 2 |
| 10 | 2 | SHEET METAL, 54-3/8" X 41-5/8" X 11 GAUGE, C.S. | ASTM A1011 TYPE B | 2 |
| 9 | 1 | SHEET METAL, 114-3/4" X 11-3/8" X 11 GAUGE, C.S. | ASTM A1011 TYPE B | 2 |
| 8 | 1 | SHEET METAL, 60-1/2" X 41-3/8" X 11 GAUGE, C.S., SEE ITEM 8 DETAIL ON SHT. 30 | ASTM A1011 TYPE B | 2 |
| 7 | 1 | SHEET METAL, 60-1/2" X 41-3/8" X 11 GAUGE, C.S. | ASTM A1011 TYPE B | 2 |
| 6 | 1 | SHEET METAL, 130-3/8" X 10-5/8" X 11 GAUGE, C.S. | ASTM A1011 TYPE B | 2 |
| 5 | 1 | SHEET METAL, 43-7/8" X 41-3/8" X 11 GAUGE, C.S. | ASTM A1011 TYPE B | 2 |
| 4 | 1 | SHEET METAL, 93-7/8" X 37-5/8" X 11 GAUGE, C.S. | ASTM A1011 TYPE B | 2 |
| 3 | 1 | SHEET METAL, 133-7/8" X 50-1/8" X 11 GAUGE, C.S. | ASTM A1011 TYPE B | 2 |
| 2 | 1 | SHEET METAL, 67-7/8" X 63-7/8" X 11 GAUGE, C.S., SEE ITEM 2 DETAIL ON SHT. 30 | ASTM A1011 TYPE B | 2 |
| 1 | 1 | SHEET METAL, 67-7/8" X 47-3/4" X 11 GAUGE, C.S. | ASTM A1011 TYPE B | 2 |

# Back View Lower Half Inner Skin Plates - Maximum Stresses

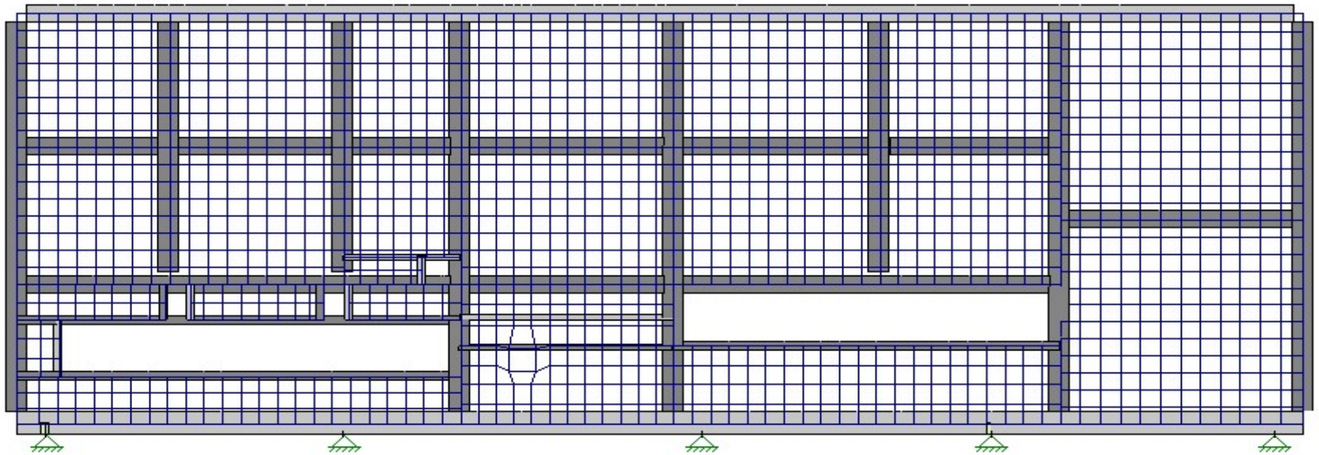

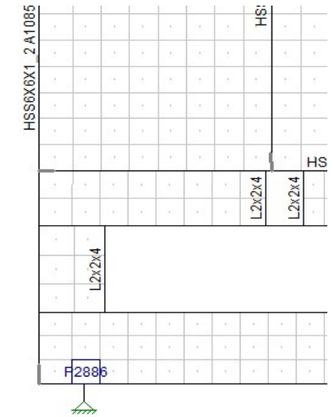


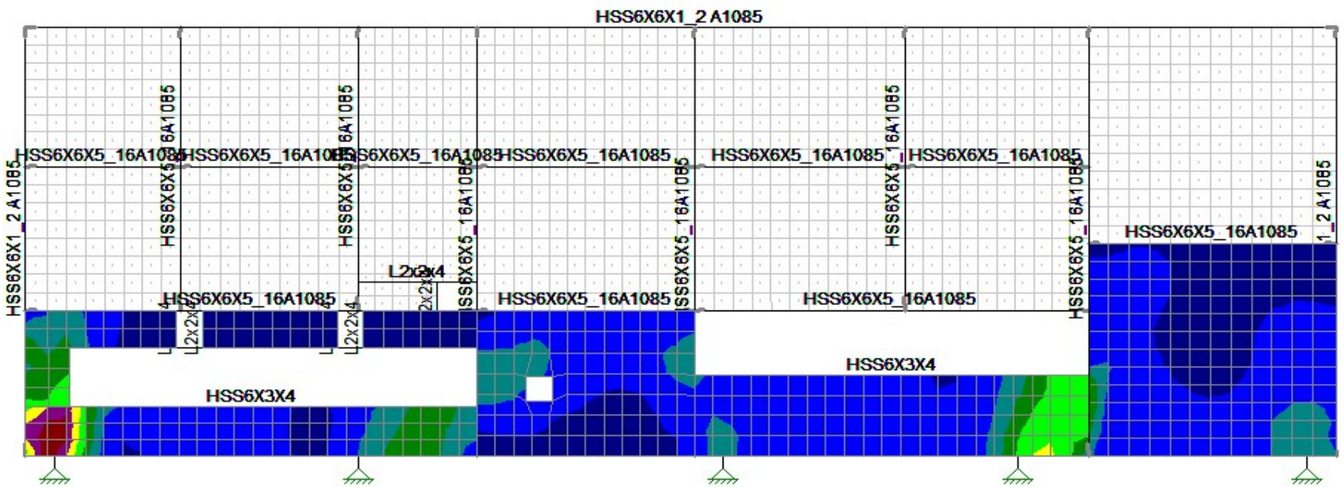


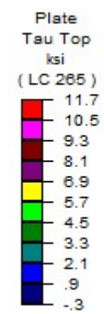


Plate Principal Stresses (By Combination)

| | L... | Plate Label | Loc | Sigma1[ksi] | Sigma2[ksi] | Tau Max[... | Angle[rad] | Von Mises[ksi] |
|---|---|---|---|---|---|---|---|---|
| 1 | 265 | P2862 | T | 3.242 | -15.042 | 9.142 | .213 | 16.898 |
| 2 | | | B | 3.242 | -15.042 | 9.142 | .213 | 16.898 |
| 3 | 265 | P2886 | T | -1.026 | -18.01 | 8.492 | .218 | 17.52 |
| 4 | | | B | -1.026 | -18.01 | 8.492 | .218 | 17.52 |

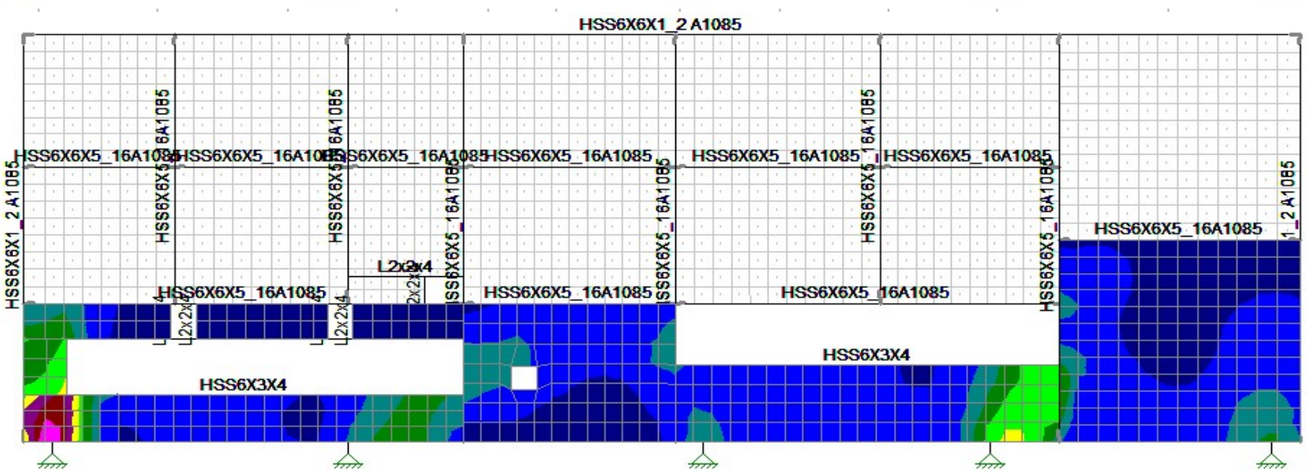


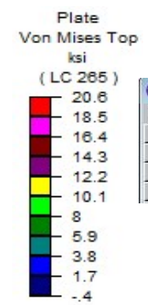


Plate Principal Stresses (By Combination)

| | L... | Plate Label | Loc | Sigma1[ksi] | Sigma2[ksi] | Tau Max[... | Angle[rad] | Von Mises[ksi] |
|---|---|---|---|---|---|---|---|---|
| 1 | 265 | P2886 | T | -1.026 | -18.01 | 8.492 | .218 | 17.52 |
| 2 | | | B | -1.026 | -18.01 | 8.492 | .218 | 17.52 |
| 3 | 265 | P2862 | T | 3.242 | -15.042 | 9.142 | .213 | 16.898 |
| 4 | | | B | 3.242 | -15.042 | 9.142 | .213 | 16.898 |

# Back View Lower Half Inner Skin Plates

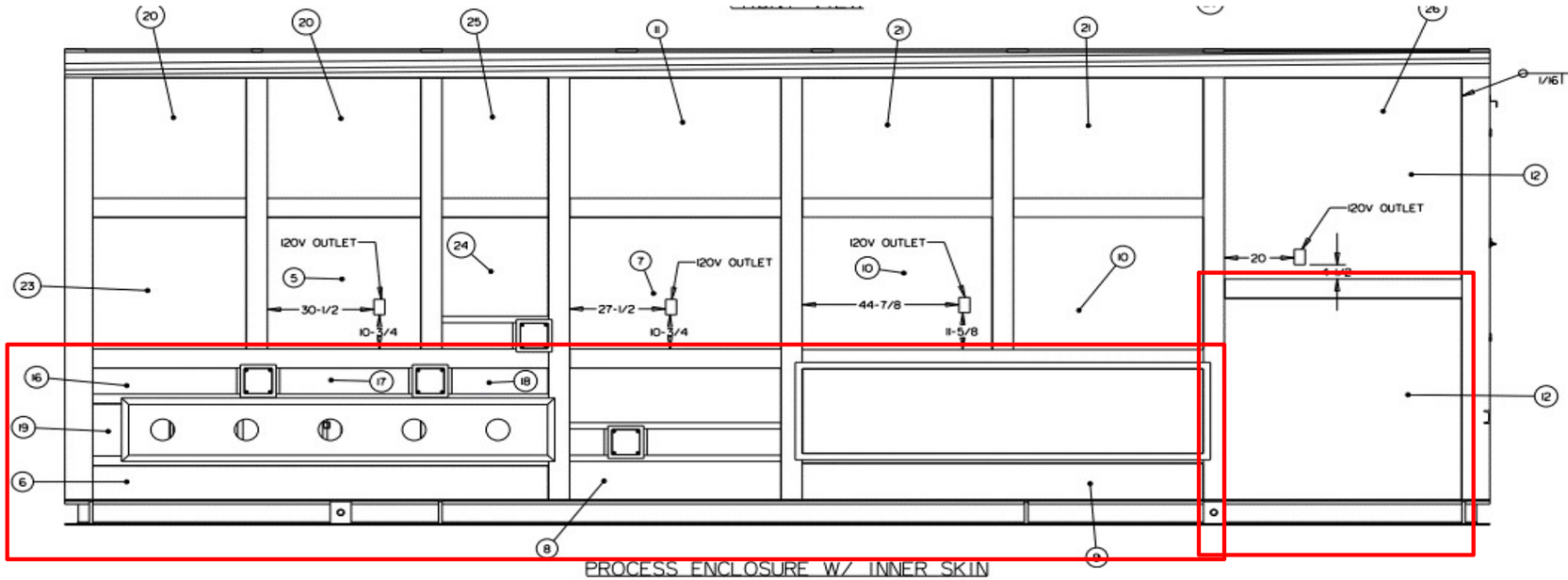


PROCESS ENCLOSURE W/ INNER SKIN
BACK VIEW

| ITEM | QTY | DESCRIPTION | SPEC AND/OR PART NO | WRPS QL |
|---|---|---|---|---|
| 25 | 1 | SHEET METAL, 30-3/8" X 37-7/8" X 11 GAUGE, C.S. | ASTM A1011 TYPE B | 2 |
| 24 | 1 | SHEET METAL, 41-3/8" X 30-3/8" X 11 GAUGE, C.S., SEE ITEM 24 DETAIL ON SHT. 30 | ASTM A1011 TYPE B | 2 |
| 23 | 1 | SHEET METAL, 43-7/8" X 41-3/8" X 11 GAUGE, C.S. | ASTM A1011 TYPE B | 2 |
| 22 | 1 | SHEET METAL, 42-5/8" X 36-3/8" X 11 GAUGE, C.S., SEE ITEM 22 DETAIL ON SHT. 30 | ASTM A1011 TYPE B | 2 |
| 21 | 2 | SHEET METAL, 54-3/8" X 37-7/8" X 11 GAUGE, C.S. | ASTM A1011 TYPE B | 2 |
| 20 | 2 | SHEET METAL, 43-7/8" X 37-7/8" X 11 GAUGE, C.S. | ASTM A1011 TYPE B | 2 |
| 19 | 1 | SHEET METAL, 16-3/8" X 9-7/8" X 11 GAUGE, C.S. | ASTM A1011 TYPE B | 2 |
| 18 | 1 | SHEET METAL, 29-3/8" X 8-1/8" X 11 GAUGE, C.S. | ASTM A1011 TYPE B | 2 |
| 17 | 1 | SHEET METAL, 40-1/2" X 8-1/8" X 11 GAUGE, C.S. | ASTM A1011 TYPE B | 2 |
| 16 | 1 | SHEET METAL, 43" X 8-1/8" X 11 GAUGE, C.S. | ASTM A1011 TYPE B | 2 |
| 15 | 1 | SHEET METAL, 67-7/8 X 15-7/8" X 11 GAUGE, C.S. | ASTM A1011 TYPE B | 2 |
| 14 | 1 | SHEET METAL, 2-1/4" X 36-3/8" X 11 GAUGE, C.S., SEE ITEM 14 DETAIL ON SHT. 31 | ASTM A1011 TYPE B | 2 |
| 13 | 1 | SHEET METAL, 135-7/8" X 81-7/8" X 11 GAUGE, C.S., SEE ITEM 13 DETAIL ON SHT. 31 | ASTM A1011 TYPE B | 2 |
| 12 | 2 | SHEET METAL, 67-7/8" X 63-3/8" X 11 GAUGE, C.S. | ASTM A1011 TYPE B | 2 |
| 11 | 1 | SHEET METAL, 60-1/2" X 37-7/8" X 11 GAUGE, C.S. | ASTM A1011 TYPE B | 2 |
| 10 | 2 | SHEET METAL, 54-3/8" X 41-5/8" X 11 GAUGE, C.S. | ASTM A1011 TYPE B | 2 |
| 9 | 1 | SHEET METAL, 114-3/4" X 11-3/8" X 11 GAUGE, C.S. | ASTM A1011 TYPE B | 2 |
| 8 | 1 | SHEET METAL, 60-1/2" X 41-3/8" X 11 GAUGE, C.S., SEE ITEM 8 DETAIL ON SHT. 30 | ASTM A1011 TYPE B | 2 |
| 7 | 1 | SHEET METAL, 60-1/2" X 41-3/8" X 11 GAUGE, C.S. | ASTM A1011 TYPE B | 2 |
| 6 | 1 | SHEET METAL, 130-3/8" X 10-5/8" X 11 GAUGE, C.S. | ASTM A1011 TYPE B | 2 |
| 5 | 1 | SHEET METAL, 43-7/8" X 41-3/8" X 11 GAUGE, C.S. | ASTM A1011 TYPE B | 2 |
| 4 | 1 | SHEET METAL, 93-7/8" X 37-5/8" X 11 GAUGE, C.S. | ASTM A1011 TYPE B | 2 |
| 3 | 1 | SHEET METAL, 133-7/8" X 50-1/8" X 11 GAUGE, C.S. | ASTM A1011 TYPE B | 2 |
| 2 | 1 | SHEET METAL, 67-7/8" X 63-7/8" X 11 GAUGE, C.S., SEE ITEM 2 DETAIL ON SHT. 30 | ASTM A1011 TYPE B | 2 |
| 1 | 1 | SHEET METAL, 67-7/8" X 47-3/4" X 11 GAUGE, C.S. | ASTM A1011 TYPE B | 2 |

**Plates - Theoretical Shear Buckling Stresses**

| Plate No. | Thickness | Length, a | Width, b | $\alpha$ | $1/\alpha$ | Ks (fixed) | $\sigma_c$ (fixed) | Stiffener Spacing |
|---|---|---|---|---|---|---|---|---|
| | | | | | | | | |
| 6 | 0.120 | 130.375 | 10.625 | 12.27 | 0.08 | 9.02 | 30.15 ksi | Not Reqd |
| 8 | 0.120 | 60.500 | 41.375 | 1.46 | 0.68 | 11.60 | 2.56 ksi | 16" Ea Way |
| 9 | 0.120 | 114.750 | 11.375 | 10.09 | 0.10 | 9.04 | 26.36 ksi | Not Reqd |
| 12 Lower | 0.120 | 67.875 | 63.375 | 1.07 | 0.93 | 13.86 | 1.30 ksi | 16" Ea Way |
| 16 | 0.120 | 43.000 | 8.125 | 5.29 | 0.19 | 9.18 | 52.48 ksi | Not Reqd |
| 17 | 0.120 | 40.500 | 8.125 | 4.98 | 0.20 | 9.21 | 52.63 ksi | Not Reqd |
| 18 | 0.120 | 29.375 | 8.125 | 3.62 | 0.28 | 9.41 | 53.79 ksi | Not Reqd |
| 19 | 0.120 | 16.375 | 9.875 | 1.66 | 0.60 | 11.02 | 42.64 ksi | Not Reqd |
| Stiff Spacing = | 0.120 | 16.000 | 16.000 | 1.00 | 1.00 | 14.58 | 21.50 ksi | |

**Stiffener Spacing to Prevent Buckling**

Plate Principal Stresses (By Combination)

| | L... | Plate Label | Loc | Sigma1[ksi] | Sigma2[ksi] | Tau Max[... | Angle[rad] | Von Mises[ksi] |
|---|---|---|---|---|---|---|---|---|
| 1 | 265 | P2862 | T | 3.242 | -15.042 | 9.142 | .213 | 16.898 |
| 2 | | | B | 3.242 | -15.042 | 9.142 | .213 | 16.898 |
| 3 | 265 | P2886 | T | -1.026 | -18.01 | 8.492 | .218 | 17.52 |
| 4 | | | B | -1.026 | -18.01 | 8.492 | .218 | 17.52 |

Plate Principal Stresses (By Combination)

| | L... | Plate Label | Loc | Sigma1[ksi] | Sigma2[ksi] | Tau Max[... | Angle[rad] | Von Mises[ksi] |
|---|---|---|---|---|---|---|---|---|
| 1 | 265 | P2886 | T | -1.026 | -18.01 | 8.492 | .218 | 17.52 |
| 2 | | | B | -1.026 | -18.01 | 8.492 | .218 | 17.52 |
| 3 | 265 | P2862 | T | 3.242 | -15.042 | 9.142 | .213 | 16.898 |
| 4 | | | B | 3.242 | -15.042 | 9.142 | .213 | 16.898 |

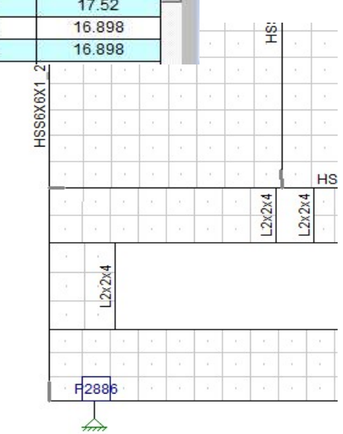

# Back View Upper Half Inner Skin Plates - Maximum Stresses

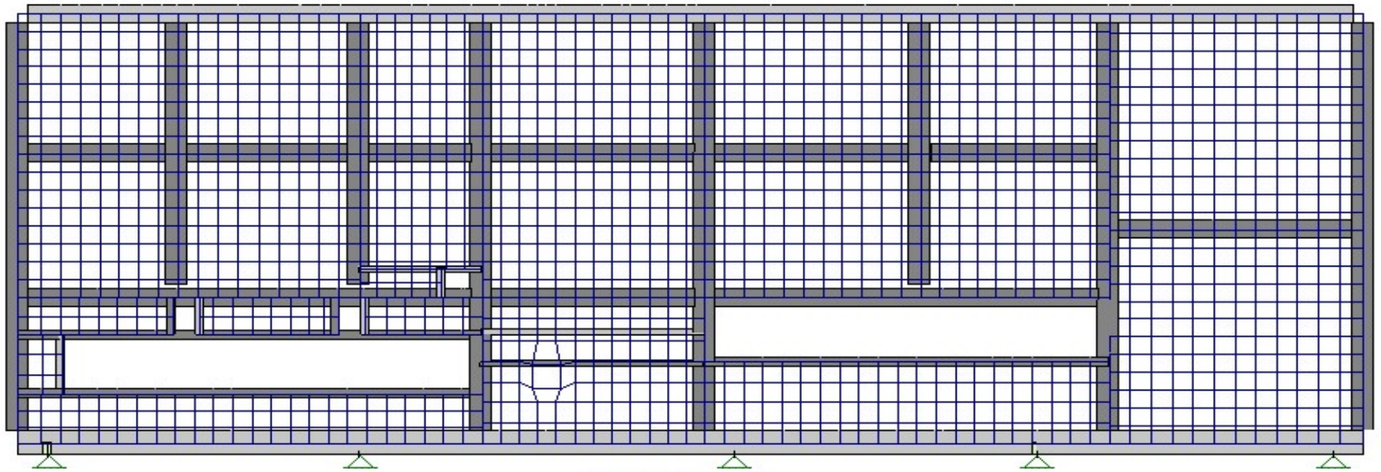

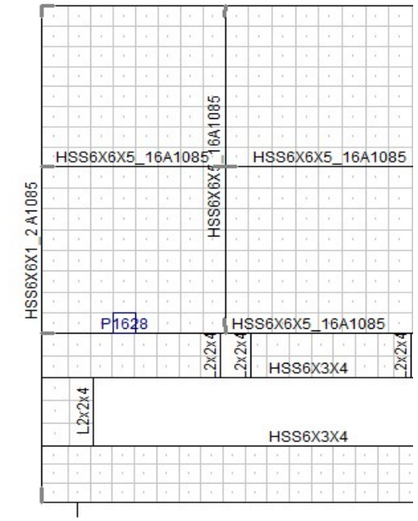


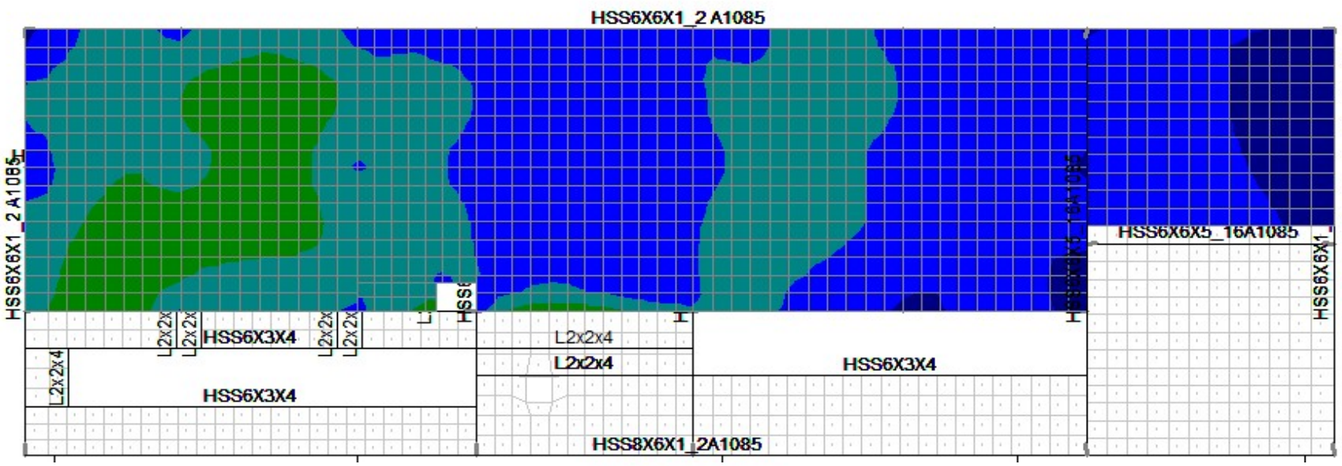


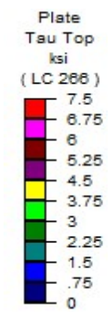


Plate Principal Stresses (By Combination)

| | L... | Plate Label | Loc | Sigma1[ksi] | Sigma2[ksi] | Tau Max[... | Angle[rad] | Von Mises[ksi] |
|---|---|---|---|---|---|---|---|---|
| 1 | 266 | P1628 | T | 1.143 | -4.792 | 2.968 | -.512 | 5.455 |
| 2 | | | B | 1.143 | -4.792 | 2.968 | -.512 | 5.455 |
| 3 | 266 | P1621 | T | 1.902 | -3.96 | 2.931 | -.588 | 5.18 |
| 4 | | | B | 1.902 | -3.96 | 2.931 | -.588 | 5.18 |

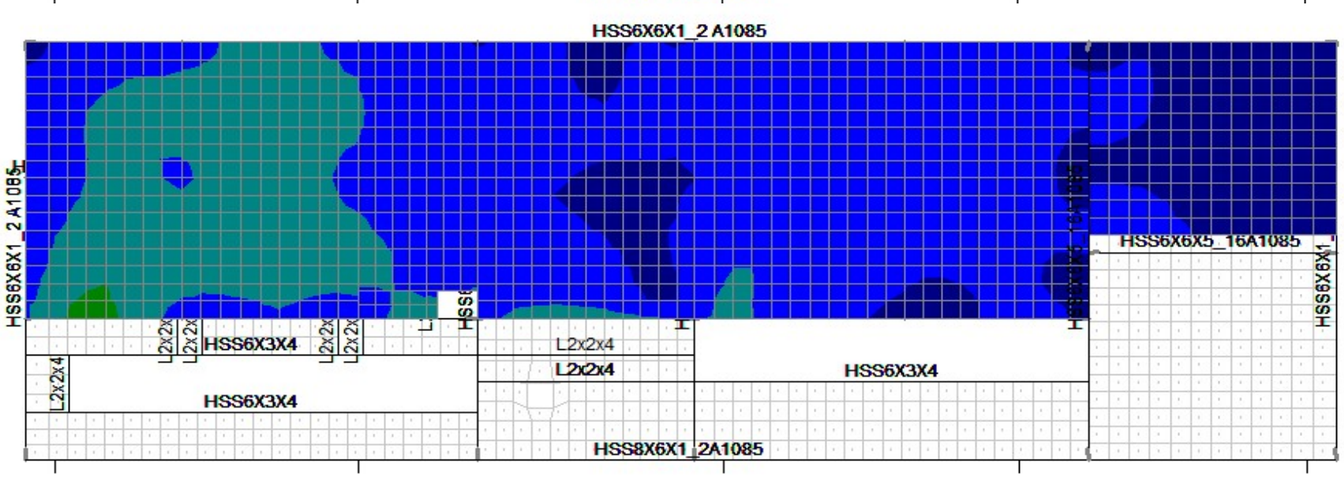


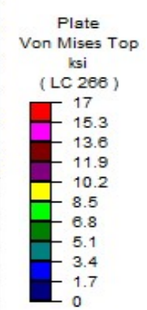


Plate Principal Stresses (By Combination)

| | L... | Plate Label | Loc | Sigma1[ksi] | Sigma2[ksi] | Tau Max[... | Angle[rad] | Von Mises[ksi] |
|---|---|---|---|---|---|---|---|---|
| 1 | 266 | P1628 | T | 1.143 | -4.792 | 2.968 | -.512 | 5.455 |
| 2 | | | B | 1.143 | -4.792 | 2.968 | -.512 | 5.455 |
| 3 | 266 | P1627 | T | .513 | -5.091 | 2.802 | -.39 | 5.365 |
| 4 | | | B | .513 | -5.091 | 2.802 | -.39 | 5.365 |

# Back View Upper Half Inner Skin Plates

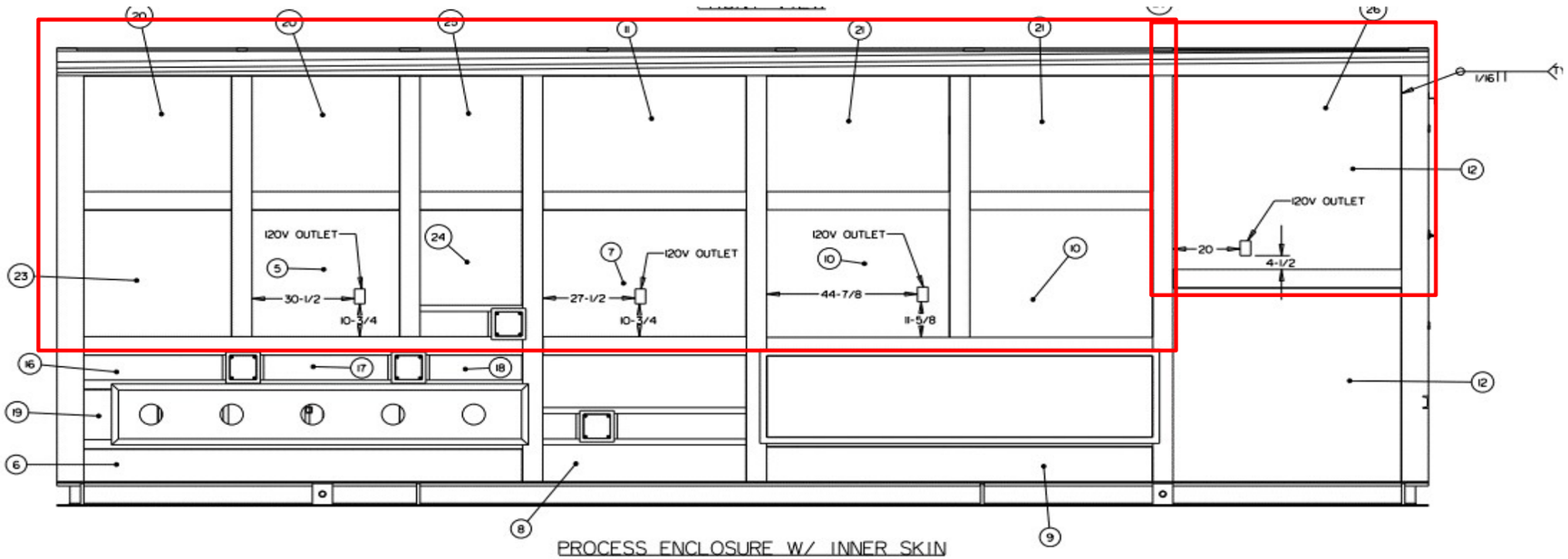


PROCESS ENCLOSURE W/ INNER SKIN
BACK VIEW

| ITEM | QTY | DESCRIPTION | SPEC AND/OR PART NO | WRPS QL |
|---|---|---|---|---|
| 25 | 1 | SHEET METAL, 30-3/8" X 37-7/8" X 11 GAUGE. C.S. | ASTM A1011 TYPE B | 2 |
| 24 | 1 | SHEET METAL, 41-3/8" X 30-3/8" X 11 GAUGE. C.S., SEE ITEM 24 DETAIL ON SHT. 30 | ASTM A1011 TYPE B | 2 |
| 23 | 1 | SHEET METAL, 43-7/8" X 41-3/8" X 11 GAUGE. C.S. | ASTM A1011 TYPE B | 2 |
| 22 | 1 | SHEET METAL, 42-5/8" X 36-3/8" X 11 GAUGE. C.S., SEE ITEM 22 DETAIL ON SHT. 30 | ASTM A1011 TYPE B | 2 |
| 21 | 2 | SHEET METAL, 54-3/8" X 37-7/8" X 11 GAUGE. C.S. | ASTM A1011 TYPE B | 2 |
| 20 | 2 | SHEET METAL, 43-7/8" X 37-7/8" X 11 GAUGE. C.S. | ASTM A1011 TYPE B | 2 |
| 19 | 1 | SHEET METAL, 16-3/8" X 9-7/8" X 11 GAUGE. C.S. | ASTM A1011 TYPE B | 2 |
| 18 | 1 | SHEET METAL, 29-3/8" X 8-1/8" X 11 GAUGE. C.S. | ASTM A1011 TYPE B | 2 |
| 17 | 1 | SHEET METAL, 40-1/2" X 8-1/8" X 11 GAUGE. C.S. | ASTM A1011 TYPE B | 2 |
| 16 | 1 | SHEET METAL, 43" X 8-1/8" X 11 GAUGE. C.S. | ASTM A1011 TYPE B | 2 |
| 15 | 1 | SHEET METAL, 67-7/8 X 15-7/8" X 11 GAUGE. C.S. | ASTM A1011 TYPE B | 2 |
| 14 | 1 | SHEET METAL, 2-1/4" X 36-3/8" X 11 GAUGE. C.S., SEE ITEM 14 DETAIL ON SHT. 31 | ASTM A1011 TYPE B | 2 |
| 13 | 1 | SHEET METAL, 135-7/8" X 81-7/8" X 11 GAUGE. C.S., SEE ITEM 13 DETAIL ON SHT. 31 | ASTM A1011 TYPE B | 2 |
| 12 | 2 | SHEET METAL, 67-7/8" X 63-3/8" X 11 GAUGE. C.S. | ASTM A1011 TYPE B | 2 |
| 11 | 1 | SHEET METAL, 60-1/2" X 37-7/8" X 11 GAUGE. C.S. | ASTM A1011 TYPE B | 2 |
| 10 | 2 | SHEET METAL, 54-3/8" X 41-5/8" X 11 GAUGE. C.S. | ASTM A1011 TYPE B | 2 |
| 9 | 1 | SHEET METAL, 114-3/4" X 11-3/8" X 11 GAUGE. C.S. | ASTM A1011 TYPE B | 2 |
| 8 | 1 | SHEET METAL, 60-1/2" X 41-3/8" X 11 GAUGE. C.S., SEE ITEM 8 DETAIL ON SHT. 30 | ASTM A1011 TYPE B | 2 |
| 7 | 1 | SHEET METAL, 60-1/2" X 41-3/8" X 11 GAUGE. C.S. | ASTM A1011 TYPE B | 2 |
| 6 | 1 | SHEET METAL, 130-3/8" X 10-5/8" X 11 GAUGE. C.S. | ASTM A1011 TYPE B | 2 |
| 5 | 1 | SHEET METAL, 43-7/8" X 41-3/8" X 11 GAUGE. C.S. | ASTM A1011 TYPE B | 2 |
| 4 | 1 | SHEET METAL, 93-7/8" X 37-5/8" X 11 GAUGE. C.S. | ASTM A1011 TYPE B | 2 |
| 3 | 1 | SHEET METAL, 133-7/8" X 50-1/8" X 11 GAUGE. C.S. | ASTM A1011 TYPE B | 2 |
| 2 | 1 | SHEET METAL, 67-7/8" X 63-7/8" X 11 GAUGE. C.S., SEE ITEM 2 DETAIL ON SHT. 30 | ASTM A1011 TYPE B | 2 |
| 1 | 1 | SHEET METAL, 67-7/8" X 47-3/4" X 11 GAUGE. C.S. | ASTM A1011 TYPE B | 2 |

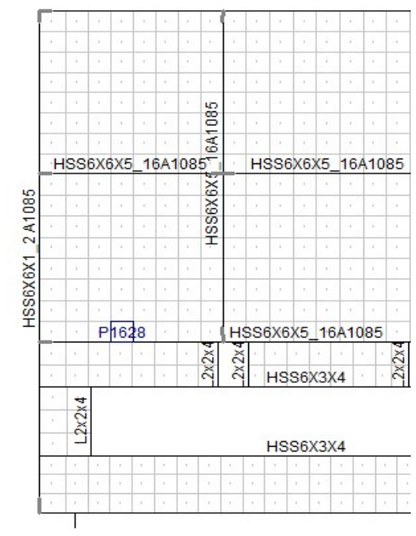


**Plates - Theoretical Shear Buckling Stresses**

| Plate No. | Thickness | Length, a | Width, b | $\alpha$ | $1/\alpha$ | Ks (fixed) | $\sigma_c$ (fixed) | Stiffener Spacing |
|---|---|---|---|---|---|---|---|---|
| 5 | 0.120 | 43.875 | 41.375 | 1.06 | 0.94 | 13.96 | 3.08 ksi | 30x24 |
| 7 | 0.120 | 60.500 | 41.375 | 1.46 | 0.68 | 11.60 | 2.56 ksi | 30x24 |
| 10 | 0.120 | 54.375 | 41.625 | 1.31 | 0.77 | 12.26 | 2.67 ksi | 30x24 |
| 11 | 0.120 | 60.500 | 37.875 | 1.60 | 0.63 | 11.17 | 2.94 ksi | 30x24 |
| 12 Upper | 0.120 | 67.875 | 63.375 | 1.07 | 0.93 | 13.86 | 1.30 ksi | 30x24 |
| 20 | 0.120 | 43.875 | 37.875 | 1.16 | 0.86 | 13.15 | 3.46 ksi | 30x24 |
| 21 | 0.120 | 54.375 | 37.875 | 1.44 | 0.70 | 11.70 | 3.08 ksi | 30x24 |
| 23 | 0.120 | 43.875 | 30.375 | 1.44 | 0.69 | 11.66 | 4.77 ksi | 30x24 |
| 24 | 0.120 | 41.375 | 30.375 | 1.36 | 0.73 | 12.00 | 4.91 ksi | 30x24 |
| 25 | 0.120 | 37.875 | 30.375 | 1.25 | 0.80 | 12.58 | 5.15 ksi | 30x24 |
| | | | | | | | | |
| Stiff Spacing = | 0.120 | 30.000 | 24.000 | 1.25 | 0.80 | 12.56 | 8.23 ksi | |
| | | Stiffener Spacing to Prevent Buckling | | | | | | |

Plate Principal Stresses (By Combination)

| | L... | Plate Label | Loc | Sigma1[ksi] | Sigma2[ksi] | Tau Max[... | Angle[rad] | Von Mises[ksi] |
|---|---|---|---|---|---|---|---|---|
| 1 | 266 | P1628 | T | 1.143 | -4.792 | 2.968 | -.512 | 5.455 |
| 2 | | | B | 1.143 | -4.792 | 2.968 | -.512 | 5.455 |
| 3 | 266 | P1621 | T | 1.902 | -3.96 | 2.931 | -.588 | 5.18 |
| 4 | | | B | 1.902 | -3.96 | 2.931 | -.588 | 5.18 |

Plate Principal Stresses (By Combination)

| | L... | Plate Label | Loc | Sigma1[ksi] | Sigma2[ksi] | Tau Max[... | Angle[rad] | Von Mises[ksi] |
|---|---|---|---|---|---|---|---|---|
| 1 | 266 | P1628 | T | 1.143 | -4.792 | 2.968 | -.512 | 5.455 |
| 2 | | | B | 1.143 | -4.792 | 2.968 | -.512 | 5.455 |
| 3 | 266 | P1627 | T | .513 | -5.091 | 2.802 | -.39 | 5.365 |
| 4 | | | B | .513 | -5.091 | 2.802 | -.39 | 5.365 |

# Air Lock Inner Skin Plates - Maximum Stresses

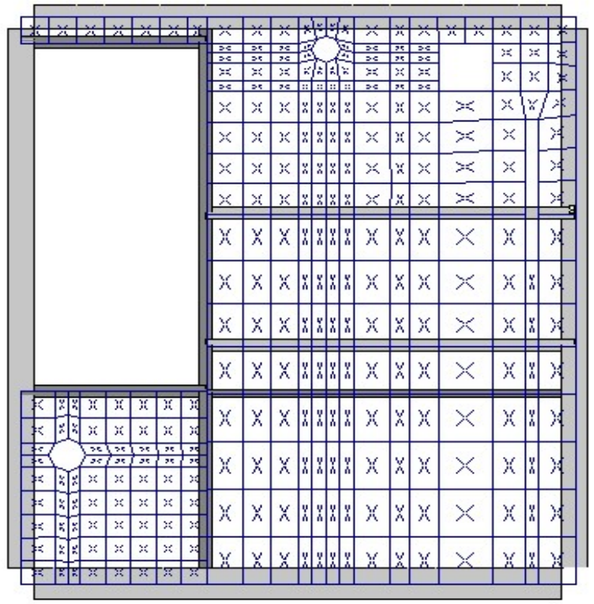

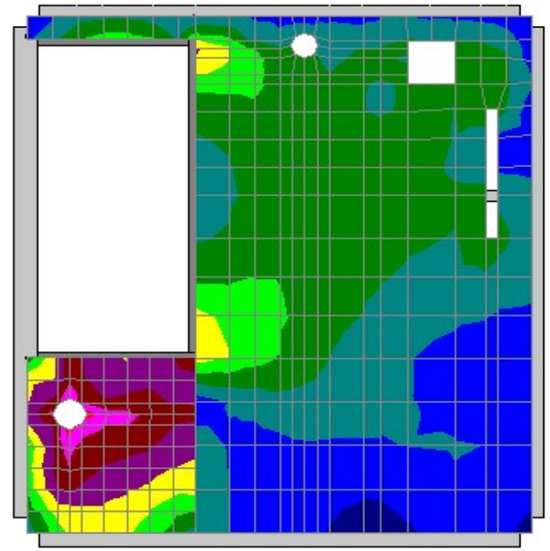

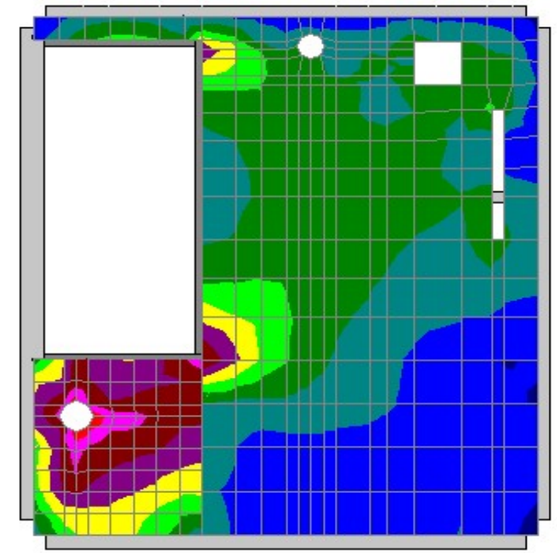

Plate Principal Stresses (By Combination)

| | L... | Plate Label | Loc | Sigma1[ksi] | Sigma2[ksi] | Tau Max[... | Angle[rad] | Von Mises[ksi] |
|---|---|---|---|---|---|---|---|---|
| 1 | 263 | P4624A | T | 7.215 | -16.927 | 12.071 | 2.295 | 21.464 |
| 2 | | | B | 7.215 | -16.927 | 12.071 | 2.295 | 21.464 |
| 3 | 263 | P4644A | T | 5.147 | -18.114 | 11.631 | 1.953 | 21.162 |
| 4 | | | B | 5.131 | -18.218 | 11.674 | 1.952 | 21.253 |

Plate Principal Stresses (By Combination)

| | L... | Plate Label | Loc | Sigma1[ksi] | Sigma2[ksi] | Tau Max[... | Angle[rad] | Von Mises[ksi] |
|---|---|---|---|---|---|---|---|---|
| 1 | 263 | P4624A | T | 7.215 | -16.927 | 12.071 | 2.295 | 21.464 |
| 2 | | | B | 7.215 | -16.927 | 12.071 | 2.295 | 21.464 |
| 3 | 263 | P4644A | T | 5.147 | -18.114 | 11.631 | 1.953 | 21.162 |
| 4 | | | B | 5.131 | -18.218 | 11.674 | 1.952 | 21.253 |

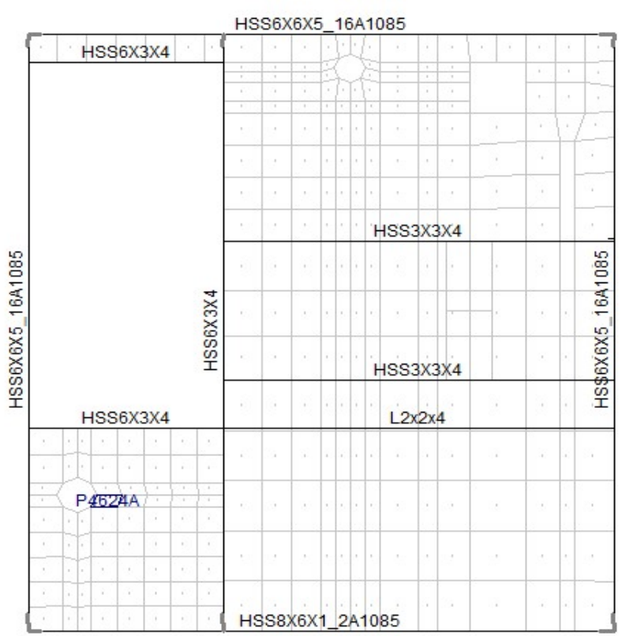


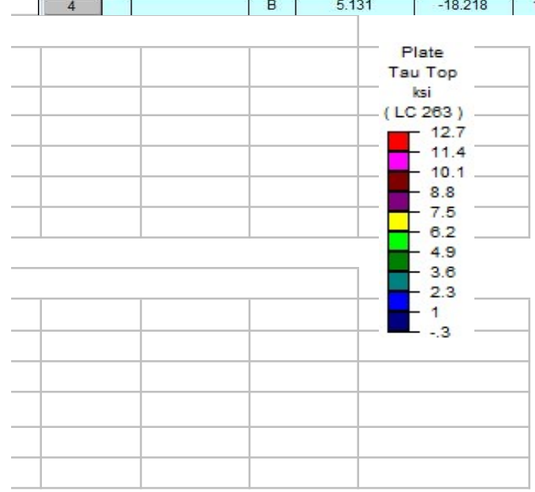


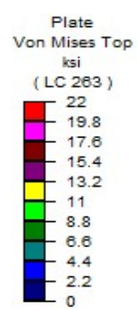

# Air Lock - Inner Skin Plates

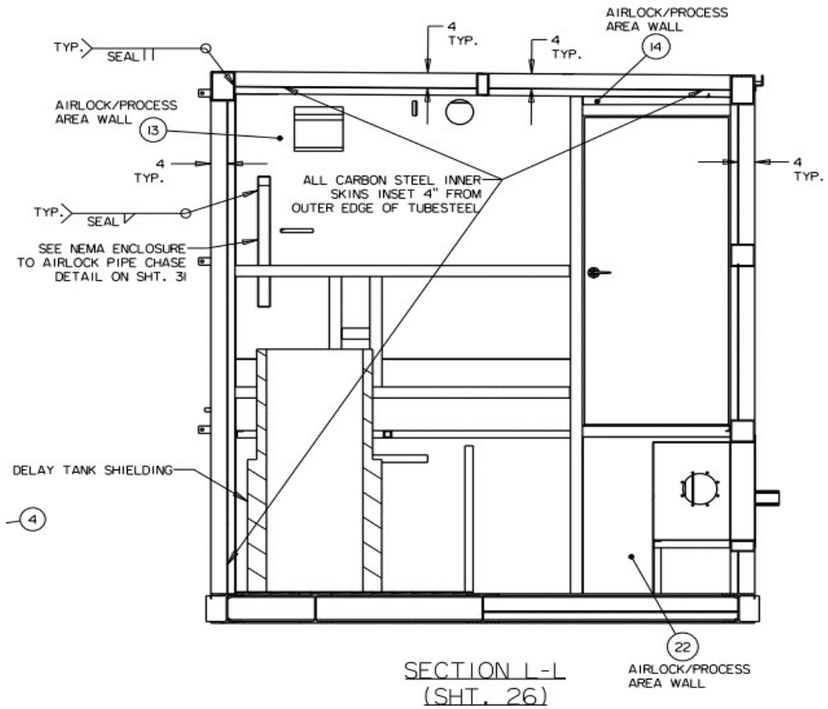


SECTION L-L
(SHT. 26)

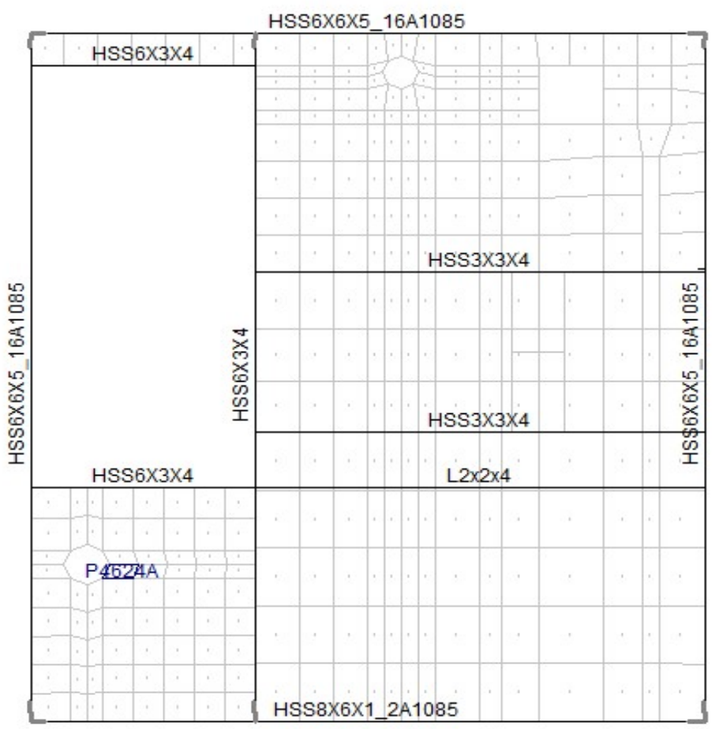


**Plates - Theoretical Shear Buckling Stresses**

| Plate No. | Thickness | Length, a | Width, b | $\alpha$ | $1/\alpha$ | Ks (fixed) | $\sigma_c$ (fixed) | Stiffener Spacing |
|---|---|---|---|---|---|---|---|---|
| 13 Top | 0.120 | 81.875 | 49.250 | 1.662 | 0.60 | 11.01 | 1.71 ksi | 16x16 |
| 13 Mid | 0.120 | 81.875 | 33.000 | 2.481 | 0.40 | 9.89 | 3.43 ksi | 16x16 |
| 13 Bot | 0.120 | 81.875 | 59.750 | 1.370 | 0.73 | 11.96 | 1.26 ksi | 16x16 |
| 14 | 0.120 | 36.375 | 2.250 | 16.167 | 0.06 | 9.00 | 671.09 ksi | Not Reqd |
| 22 | 0.120 | 42.625 | 36.375 | 1.172 | 0.85 | 13.06 | 3.72 ksi | 16x16 |
| Stiff Spacing = | 0.120 | 16.000 | 16.000 | 1.000 | 1.00 | 14.58 | 21.50 ksi | |

**Stiffener Spacing to Prevent Buckling**

Plate Principal Stresses (By Combination)

| | L... | Plate Label | Loc | Sigma1[ksi] | Sigma2[ksi] | Tau Max[... | Angle[rad] | Von Mises[ksi] |
|---|---|---|---|---|---|---|---|---|
| 1 | 263 | P4624A | T | 7.215 | -16.927 | 12.071 | 2.295 | 21.464 |
| 2 | | | B | 7.215 | -16.927 | 12.071 | 2.295 | 21.464 |
| 3 | 263 | P4644A | T | 5.147 | -18.114 | 11.631 | 1.953 | 21.162 |
| 4 | | | B | 5.131 | -18.218 | 11.674 | 1.952 | 21.253 |

Plate Principal Stresses (By Combination)

| | L... | Plate Label | Loc | Sigma1[ksi] | Sigma2[ksi] | Tau Max[... | Angle[rad] | Von Mises[ksi] |
|---|---|---|---|---|---|---|---|---|
| 1 | 263 | P4624A | T | 7.215 | -16.927 | 12.071 | 2.295 | 21.464 |
| 2 | | | B | 7.215 | -16.927 | 12.071 | 2.295 | 21.464 |
| 3 | 263 | P4644A | T | 5.147 | -18.114 | 11.631 | 1.953 | 21.162 |
| 4 | | | B | 5.131 | -18.218 | 11.674 | 1.952 | 21.253 |

| ITEM | QTY | DESCRIPTION | SPEC AND/OR PART NO | WRPS QL |
|---|---|---|---|---|
| 25 | 1 | SHEET METAL, 30-3/8" X 37-7/8" X 11 GAUGE, C.S. | ASTM A1011 TYPE B | 2 |
| 24 | 1 | SHEET METAL, 41-3/8" X 30-3/8" X 11 GAUGE, C.S., SEE ITEM 24 DETAIL ON SHT. 30 | ASTM A1011 TYPE B | 2 |
| 23 | 1 | SHEET METAL, 43-7/8" X 41-3/8" X 11 GAUGE, C.S. | ASTM A1011 TYPE B | 2 |
| 22 | 1 | SHEET METAL, 42-5/8" X 36-3/8" X 11 GAUGE, C.S., SEE ITEM 22 DETAIL ON SHT. 30 | ASTM A1011 TYPE B | 2 |
| 21 | 2 | SHEET METAL, 54-3/8" X 37-7/8" X 11 GAUGE, C.S. | ASTM A1011 TYPE B | 2 |
| 20 | 2 | SHEET METAL, 43-7/8" X 37-7/8" X 11 GAUGE, C.S. | ASTM A1011 TYPE B | 2 |
| 19 | 1 | SHEET METAL, 16-3/8" X 9-7/8" X 11 GAUGE, C.S. | ASTM A1011 TYPE B | 2 |
| 18 | 1 | SHEET METAL, 29-3/8" X 8-1/8" X 11 GAUGE, C.S. | ASTM A1011 TYPE B | 2 |
| 17 | 1 | SHEET METAL, 40-1/2" X 8-1/8" X 11 GAUGE, C.S. | ASTM A1011 TYPE B | 2 |
| 16 | 1 | SHEET METAL, 43" X 8-1/8" X 11 GAUGE, C.S. | ASTM A1011 TYPE B | 2 |
| 15 | 1 | SHEET METAL, 67-7/8 X 15-7/8" X 11 GAUGE, C.S. | ASTM A1011 TYPE B | 2 |
| 14 | 1 | SHEET METAL, 2-1/4" X 36-3/8" X 11 GAUGE, C.S., SEE ITEM 14 DETAIL ON SHT. 31 | ASTM A1011 TYPE B | 2 |
| 13 | 1 | SHEET METAL, 135-7/8" X 81-7/8" X 11 GAUGE, C.S., SEE ITEM 13 DETAIL ON SHT. 31 | ASTM A1011 TYPE B | 2 |
| 12 | 2 | SHEET METAL, 67-7/8" X 63-3/8" X 11 GAUGE, C.S. | ASTM A1011 TYPE B | 2 |
| 11 | 1 | SHEET METAL, 60-1/2" X 37-7/8" X 11 GAUGE, C.S. | ASTM A1011 TYPE B | 2 |
| 10 | 2 | SHEET METAL, 54-3/8" X 41-5/8" X 11 GAUGE, C.S. | ASTM A1011 TYPE B | 2 |
| 9 | 1 | SHEET METAL, 114-3/4" X 11-3/8" X 11 GAUGE, C.S. | ASTM A1011 TYPE B | 2 |
| 8 | 1 | SHEET METAL, 60-1/2" X 41-3/8" X 11 GAUGE, C.S., SEE ITEM 8 DETAIL ON SHT. 30 | ASTM A1011 TYPE B | 2 |
| 7 | 1 | SHEET METAL, 60-1/2" X 41-3/8" X 11 GAUGE, C.S. | ASTM A1011 TYPE B | 2 |
| 6 | 1 | SHEET METAL, 130-3/8" X 10-5/8" X 11 GAUGE, C.S. | ASTM A1011 TYPE B | 2 |
| 5 | 1 | SHEET METAL, 43-7/8" X 41-3/8" X 11 GAUGE, C.S. | ASTM A1011 TYPE B | 2 |
| 4 | 1 | SHEET METAL, 93-7/8" X 37-5/8" X 11 GAUGE, C.S. | ASTM A1011 TYPE B | 2 |
| 3 | 1 | SHEET METAL, 133-7/8" X 50-1/8" X 11 GAUGE, C.S. | ASTM A1011 TYPE B | 2 |
| 2 | 1 | SHEET METAL, 67-7/8" X 63-7/8" X 11 GAUGE, C.S., SEE ITEM 2 DETAIL ON SHT. 30 | ASTM A1011 TYPE B | 2 |
| 1 | 1 | SHEET METAL, 67-7/8" X 47-3/4" X 11 GAUGE, C.S. | ASTM A1011 TYPE B | 2 |

# Roof Inner Skin Plates - Maximum Stresses

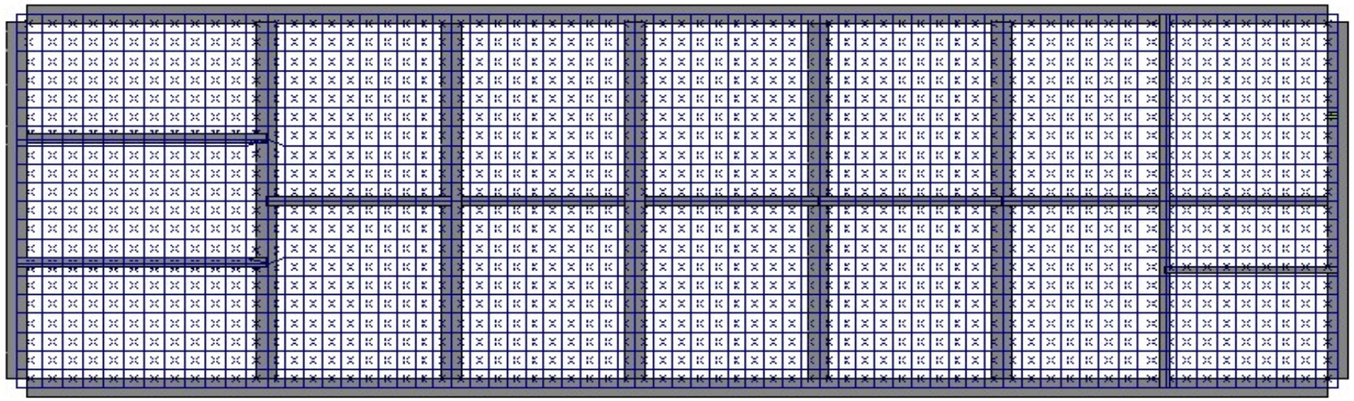

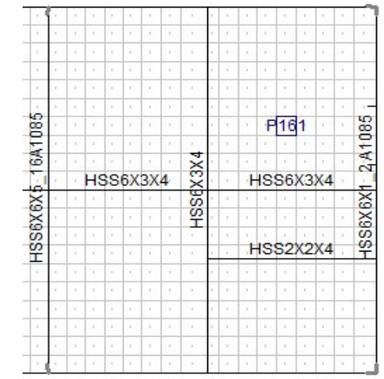


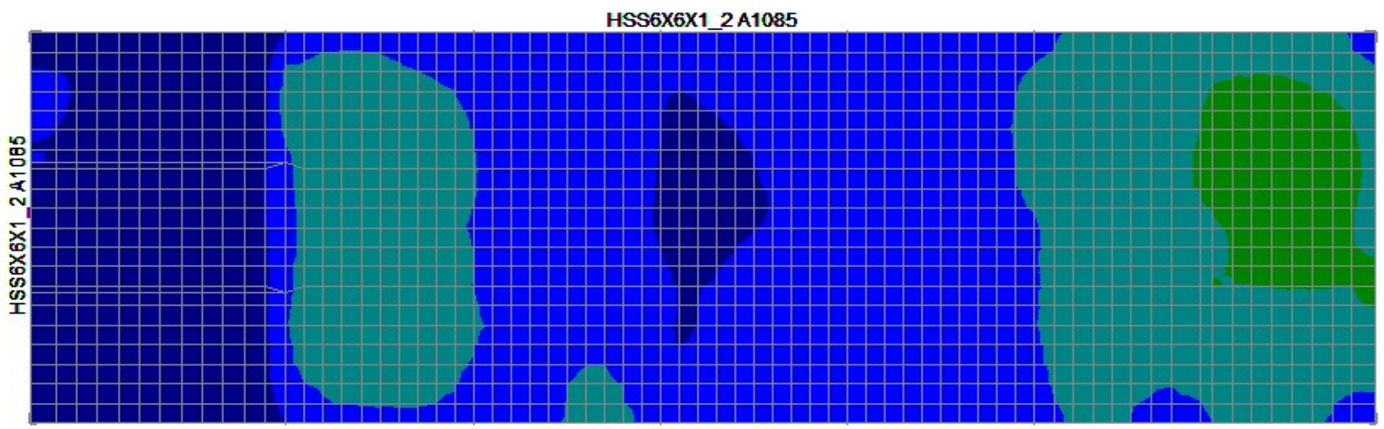


Plate Principal Stresses (By Combination)

| | L... | Plate Label | Loc | Sigma1[ksi] | Sigma2[ksi] | Tau Max[... | Angle[rad] | Von Mises[ksi] |
|---|---|---|---|---|---|---|---|---|
| 1 | 265 | P161 | T | 3.688 | -3.599 | 3.643 | -.771 | 6.311 |
| 2 | | | B | 3.688 | -3.599 | 3.643 | -.771 | 6.311 |
| 3 | 265 | P148 | T | 3.716 | -3.57 | 3.643 | -.779 | 6.31 |
| 4 | | | B | 3.716 | -3.57 | 3.643 | -.779 | 6.31 |

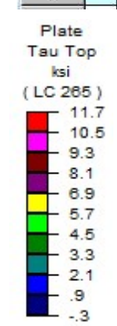


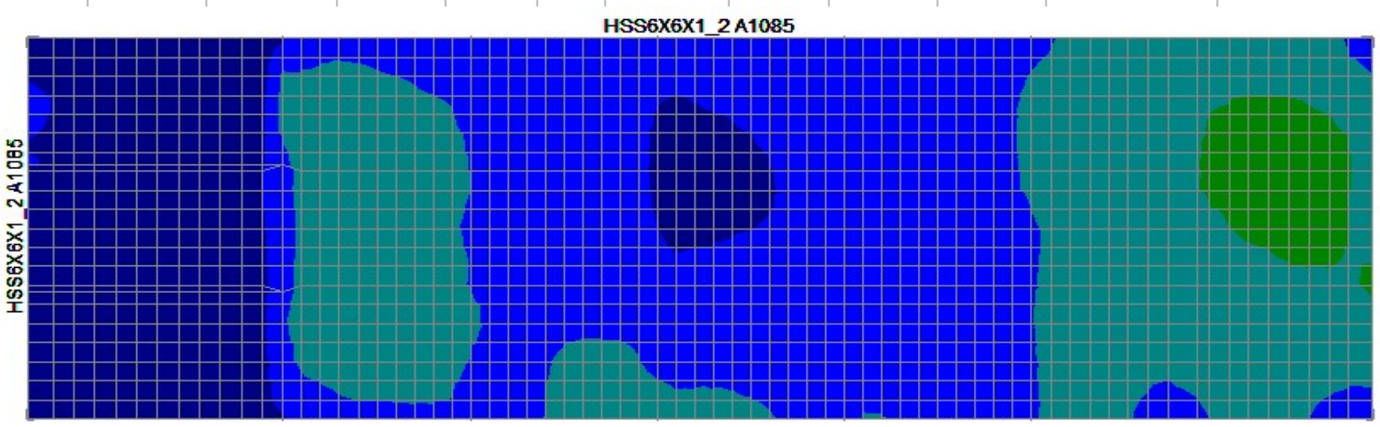


Plate Principal Stresses (By Combination)

| | L... | Plate Label | Loc | Sigma1[ksi] | Sigma2[ksi] | Tau Max[... | Angle[rad] | Von Mises[ksi] |
|---|---|---|---|---|---|---|---|---|
| 1 | 265 | P161 | T | 3.688 | -3.599 | 3.643 | -.771 | 6.311 |
| 2 | | | B | 3.688 | -3.599 | 3.643 | -.771 | 6.311 |
| 3 | 265 | P148 | T | 3.716 | -3.57 | 3.643 | -.779 | 6.31 |
| 4 | | | B | 3.716 | -3.57 | 3.643 | -.779 | 6.31 |

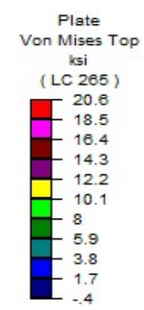

# Roof View Inner Skin Plates

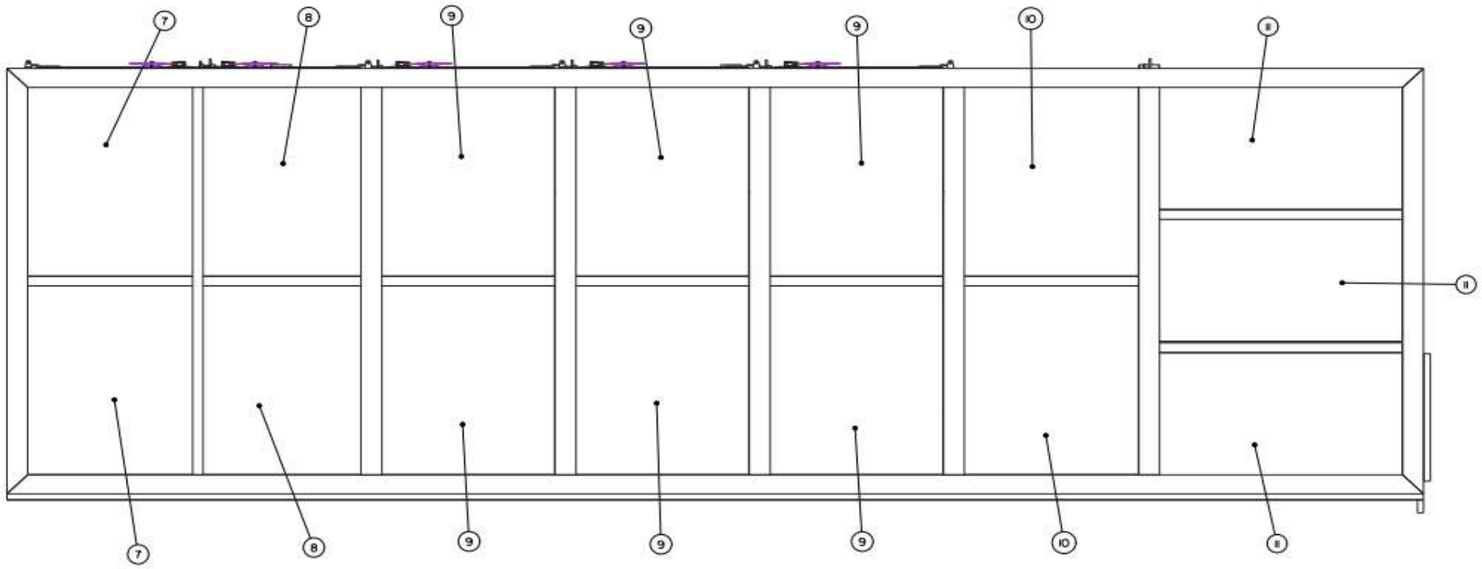


PROCESS ENCLOSURE W/ INNER SKIN
TOP VIEW

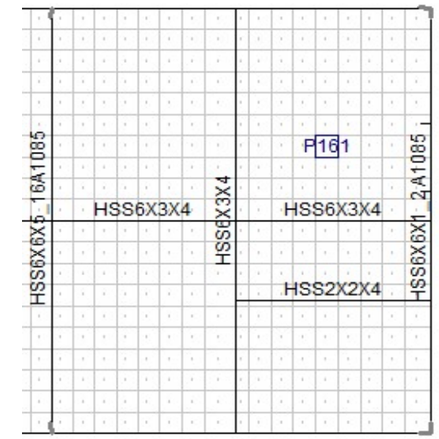


| | | | | |
|---|---|---|---|---|
| 13 | 1 | PLATE, 45-1/2" X 29-1/4" X 1/8" THK., C.S., SEE ITEM 13 DETAIL ON SHT. 30 | ASTM A36 | |

**Plates - Theoretical Shear Buckling Stresses**

| Plate No. | Thickness | Length, a | Width, b | $\alpha$ | $1/\alpha$ | Ks (fixed) | $\sigma_c$ (fixed) | Stiffener Spacing |
|---|---|---|---|---|---|---|---|---|
| 7 | 0.120 | 59.500 | 47.500 | 1.253 | 0.80 | 12.55 | 2.10 ksi | 30x24 |
| 8 | 0.120 | 59.500 | 45.500 | 1.308 | 0.76 | 12.25 | 2.23 ksi | 30x24 |
| 9 | 0.120 | 59.500 | 49.750 | 1.196 | 0.84 | 12.90 | 1.97 ksi | 30x24 |
| 10 | 0.120 | 59.500 | 50.125 | 1.187 | 0.84 | 12.95 | 1.95 ksi | 30x24 |
| 11 | 0.120 | 69.875 | 38.500 | 1.815 | 0.55 | 10.68 | 2.72 ksi | 30x24 |
| Stiff Spacing = | 0.120 | 30.000 | 24.000 | 1.250 | 0.80 | 12.56 | 8.23 ksi | **Stiffener Spacing to Prevent Buckling** |

Plate Principal Stresses (By Combination)

| | L... | Plate Label | Loc | Sigma1[ksi] | Sigma2[ksi] | Tau Max[... | Angle[rad] | Von Mises[ksi] |
|---|---|---|---|---|---|---|---|---|
| 1 | 265 | P161 | T | 3.688 | -3.599 | 3.643 | -.771 | 6.311 |
| 2 | | | B | 3.688 | -3.599 | 3.643 | -.771 | 6.311 |
| 3 | 265 | P148 | T | 3.716 | -3.57 | 3.643 | -.779 | 6.31 |
| 4 | | | B | 3.716 | -3.57 | 3.643 | -.779 | 6.31 |

Plate Principal Stresses (By Combination)

| | L... | Plate Label | Loc | Sigma1[ksi] | Sigma2[ksi] | Tau Max[... | Angle[rad] | Von Mises[ksi] |
|---|---|---|---|---|---|---|---|---|
| 1 | 265 | P161 | T | 3.688 | -3.599 | 3.643 | -.771 | 6.311 |
| 2 | | | B | 3.688 | -3.599 | 3.643 | -.771 | 6.311 |
| 3 | 265 | P148 | T | 3.716 | -3.57 | 3.643 | -.779 | 6.31 |
| 4 | | | B | 3.716 | -3.57 | 3.643 | -.779 | 6.31 |

| ITEM | QTY | DESCRIPTION | SPEC AND/OR PART NO | WRPS QL |
|---|---|---|---|---|
| 13 | 1 | PLATE, 45-1/2" X 29-1/4" X 1/8" THK., C.S., SEE ITEM 13 DETAIL ON SHT. 30 | ASTM A36 | 2 |
| 12 | 1 | PLATE, 79-5/8" X 19-7/8" X 1/8" THK., C.S., SEE ITEM 12 DETAIL ON SHEET 30 | ASTM A36 | 3 |
| 11 | 3 | PLATE, 69-7/8" X 38-1/2" X 1/8" THK., C.S. | ASTM A36 | 2 |
| 10 | 2 | PLATE, 50-1/8" X 59-1/2" X 1/8" THK., C.S. | ASTM A36 | 2 |
| 9 | 6 | PLATE, 49-3/4" X 59-1/2" X 1/8" THK., C.S. | ASTM A36 | 2 |
| 8 | 2 | PLATE, 59-1/2" X 45-1/2" X 1/8" THK., C.S. | ASTM A36 | 2 |
| 7 | 2 | PLATE, 59-1/2" X 47-1/2" X 1/8" THK., C.S. | ASTM A36 | 2 |
| 6 | 1 | PLATE, 58" X 44-1/8" X 1/8" THK., C.S. | ASTM A36 | 2 |
| 5 | 1 | PLATE, 79-5/8" X 74-5/8" X 1/8" THK., C.S. | ASTM A36 | 3 |
| 4 | 1 | PLATE, 37-1/8" X 6-1/8" X 1/8" THK., C.S., SEE ITEM 4 DETAIL ON SHT. 30 | ASTM A36 | 3 |
| 3 | 1 | PLATE, 45-3/4" X 22-5/8" X 1/8" THK., C.S., SEE ITEM 3 DETAIL ON SHT. 30 | ASTM A36 | 2 |
| 2 | 1 | PLATE, 58 X 45-1/4" X 1/8" THK., C.S., SEE ITEM 2 DETAIL ON SHT. 30 | ASTM A36 | 2 |
| 1 | 1 | PLATE, 82" X 58" X 1/8" THK., C.S. | ASTM A36 | 2 |

# Right Side Inner Skin Plates - Maximum Stresses

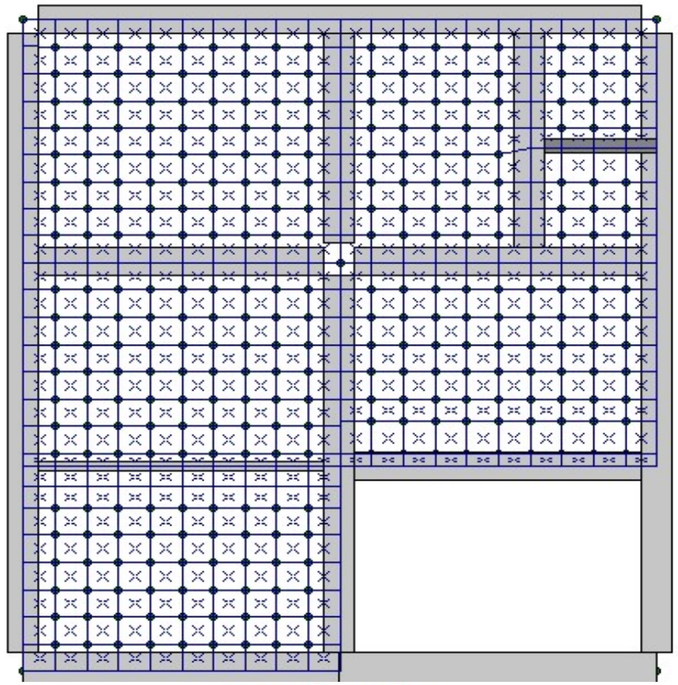

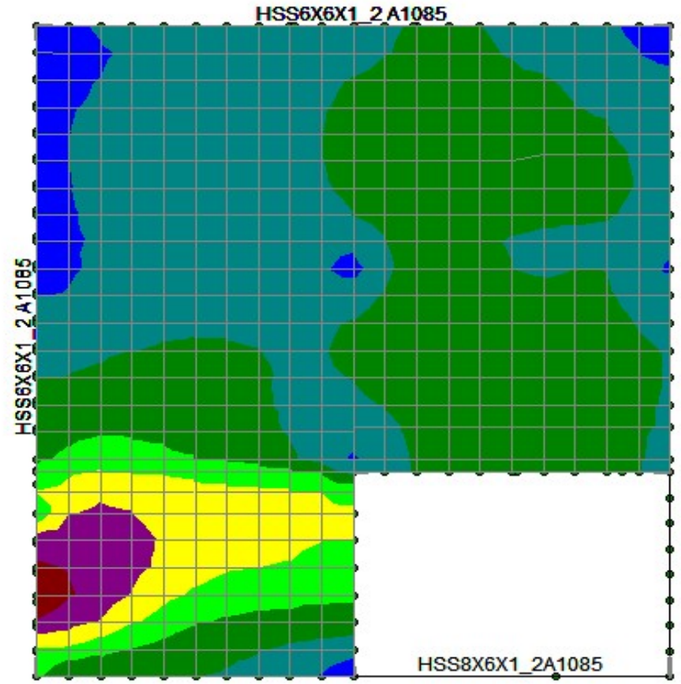


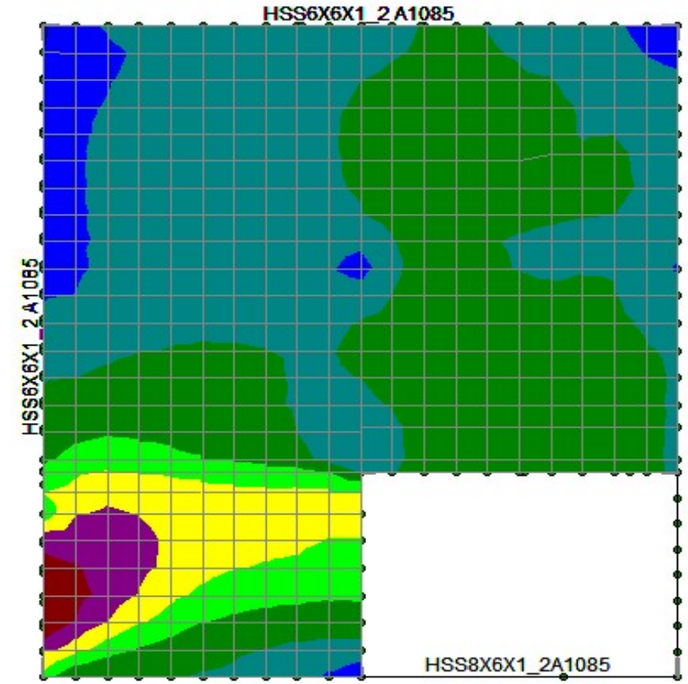


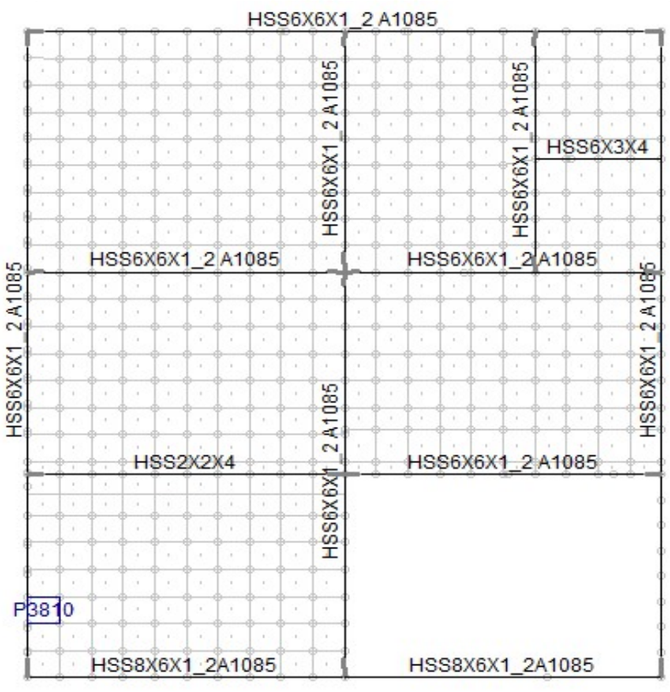


Plate Principal Stresses (By Combination)

| | L... | Plate Label | Loc | Sigma1[ksi] | Sigma2[ksi] | Tau Max[... | Angle[rad] | Von Mises[ksi] |
|---|---|---|---|---|---|---|---|---|
| 1 | 265 | P3810 | T | 2.006 | -15.101 | 8.553 | .854 | 16.198 |
| 2 | | | B | 2.006 | -15.101 | 8.553 | .854 | 16.198 |
| 3 | 265 | P3800 | T | 3.474 | -13.334 | 8.404 | .778 | 15.368 |
| 4 | | | B | 3.474 | -13.334 | 8.404 | .778 | 15.368 |

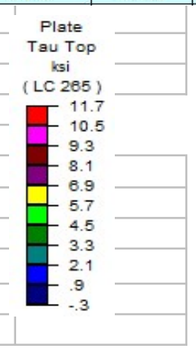


Plate Principal Stresses (By Combination)

| | L... | Plate Label | Loc | Sigma1[ksi] | Sigma2[ksi] | Tau Max[... | Angle[rad] | Von Mises[ksi] |
|---|---|---|---|---|---|---|---|---|
| 1 | 265 | P3810 | T | 2.006 | -15.101 | 8.553 | .854 | 16.198 |
| 2 | | | B | 2.006 | -15.101 | 8.553 | .854 | 16.198 |
| 3 | 265 | P3800 | T | 3.474 | -13.334 | 8.404 | .778 | 15.368 |
| 4 | | | B | 3.474 | -13.334 | 8.404 | .778 | 15.368 |

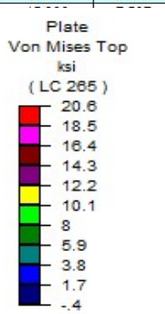

# Right Side - Inner Skin Plates

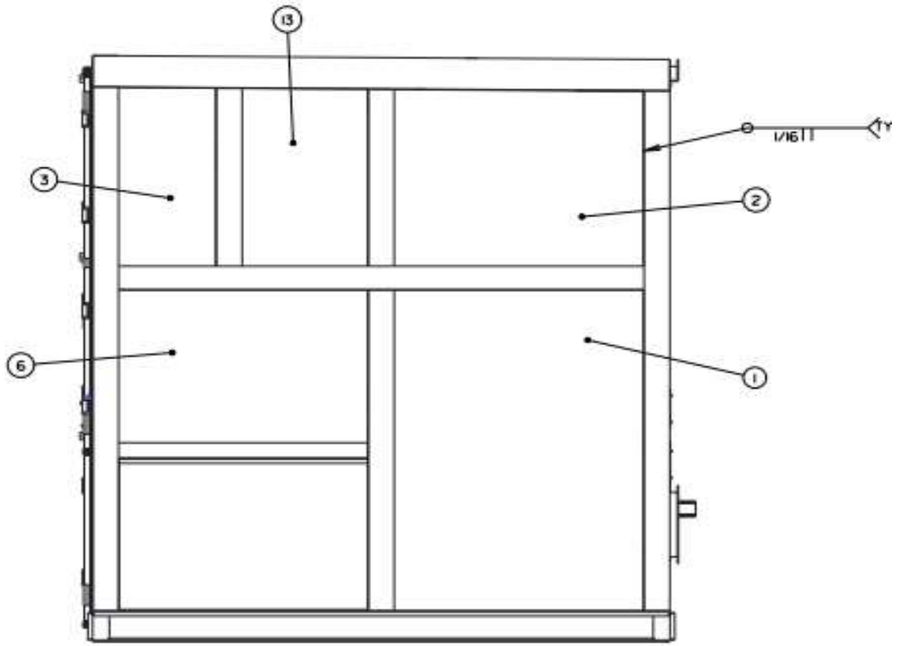


PROCESS ENCLOSURE W/ INNER SKIN

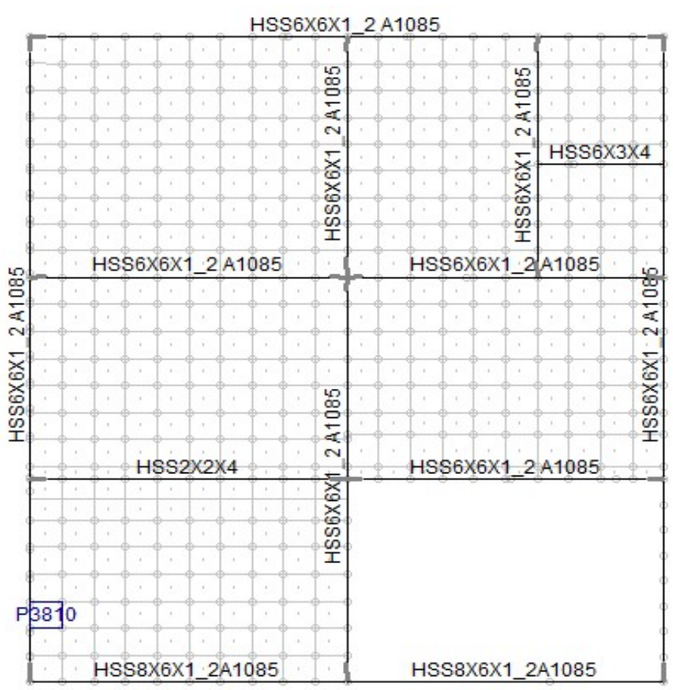


**Plates - Theoretical Shear Buckling Stresses**

| Plate No. | Thickness | Length, a | Width, b | $\alpha$ | $1/\alpha$ | Ks (fixed) | $\sigma_c$ (fixed) | Stiffener Spacing |
|---|---|---|---|---|---|---|---|---|
| 1 | 0.120 | 82.000 | 58.000 | 1.414 | 0.71 | 11.78 | 1.32 ksi | 18x18 |
| 2 | 0.120 | 58.000 | 45.250 | 1.282 | 0.78 | 12.39 | 2.28 ksi | 18x18 |
| 3 | 0.120 | 45.750 | 22.625 | 2.022 | 0.49 | 10.35 | 7.63 ksi | 18x18 |
| 6 | 0.120 | 58.000 | 44.125 | 1.314 | 0.76 | 12.22 | 2.37 ksi | 18x18 |
| 13 | 0.120 | 45.500 | 29.250 | 1.556 | 0.64 | 11.29 | 4.98 ksi | 18x18 |
| Stiff Spacing = | 0.120 | 18.000 | 18.000 | 1.000 | 1.00 | 14.58 | 16.98 ksi | |

**Stiffener Spacing to Prevent Buckling**

Plate Principal Stresses (By Combination)

| | L... | Plate Label | Loc | Sigma1[ksi] | Sigma2[ksi] | Tau Max[... | Angle[rad] | Von Mises[ksi] |
|---|---|---|---|---|---|---|---|---|
| 1 | 265 | P3810 | T | 2.006 | -15.101 | 8.553 | .854 | 16.198 |
| 2 | | | B | 2.006 | -15.101 | 8.553 | .854 | 16.198 |
| 3 | 265 | P3800 | T | 3.474 | -13.334 | 8.404 | .778 | 15.368 |
| 4 | | | B | 3.474 | -13.334 | 8.404 | .778 | 15.368 |

Plate Principal Stresses (By Combination)

| | L... | Plate Label | Loc | Sigma1[ksi] | Sigma2[ksi] | Tau Max[... | Angle[rad] | Von Mises[ksi] |
|---|---|---|---|---|---|---|---|---|
| 1 | 265 | P3810 | T | 2.006 | -15.101 | 8.553 | .854 | 16.198 |
| 2 | | | B | 2.006 | -15.101 | 8.553 | .854 | 16.198 |
| 3 | 265 | P3800 | T | 3.474 | -13.334 | 8.404 | .778 | 15.368 |
| 4 | | | B | 3.474 | -13.334 | 8.404 | .778 | 15.368 |

| ITEM | QTY | DESCRIPTION | SPEC AND/OR PART NO | WRPS QL |
|---|---|---|---|---|
| 13 | 1 | PLATE. 45-1/2" X 29-1/4" X 1/8" THK., C.S., SEE ITEM 13 DETAIL ON SHT. 30 | ASTM A36 | 2 |
| 12 | 1 | PLATE. 79-5/8" X 19-7/8" X 1/8" THK., C.S., SEE ITEM 12 DETAIL ON SHEET 30 | ASTM A36 | 3 |
| 11 | 3 | PLATE. 69-7/8" X 38-1/2" X 1/8" THK., C.S. | ASTM A36 | 2 |
| 10 | 2 | PLATE. 50-1/8" X 59-1/2" X 1/8" THK., C.S. | ASTM A36 | 2 |
| 9 | 6 | PLATE. 49-3/4" X 59-1/2" X 1/8" THK., C.S. | ASTM A36 | 2 |
| 8 | 2 | PLATE. 59-1/2" X 45-1/2" X 1/8" THK., C.S. | ASTM A36 | 2 |
| 7 | 2 | PLATE. 59-1/2" X 47-1/2" X 1/8" THK., C.S. | ASTM A36 | 2 |
| 6 | 1 | PLATE. 58" X 44-1/8" X 1/8" THK., C.S. | ASTM A36 | 2 |
| 5 | 1 | PLATE. 79-5/8" X 74-5/8" X 1/8" THK., C.S. | ASTM A36 | 3 |
| 4 | 1 | PLATE. 37-1/8" X 6-1/8" X 1/8" THK., C.S., SEE ITEM 4 DETAIL ON SHT. 30 | ASTM A36 | 3 |
| 3 | 1 | PLATE. 45-3/4" X 22-5/8" X 1/8" THK., C.S., SEE ITEM 3 DETAIL ON SHT. 30 | ASTM A36 | 2 |
| 2 | 1 | PLATE. 58 X 45-1/4" X 1/8" THK., C.S., SEE ITEM 2 DETAIL ON SHT. 30 | ASTM A36 | 2 |
| 1 | 1 | PLATE. 82" X 58" X 1/8" THK., C.S. | ASTM A36 | 2 |

# Left Side  Inner Skin Plates - Maximum Stresses

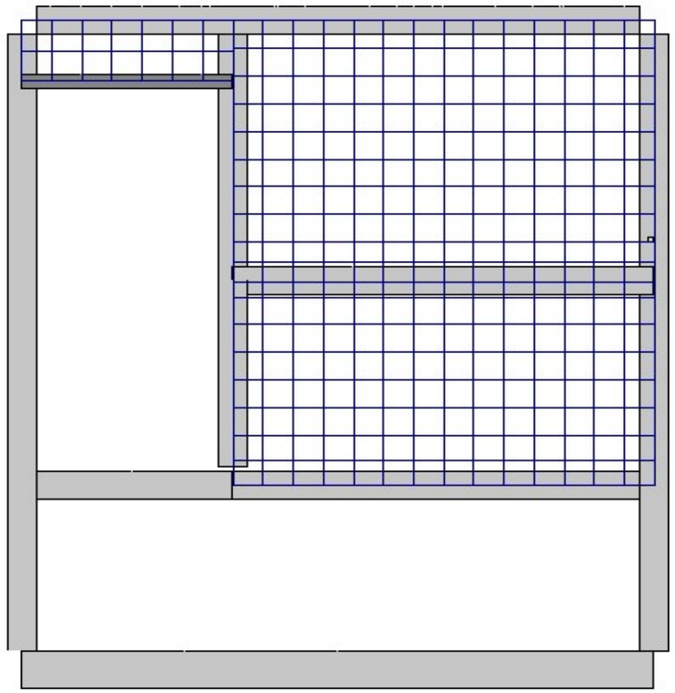

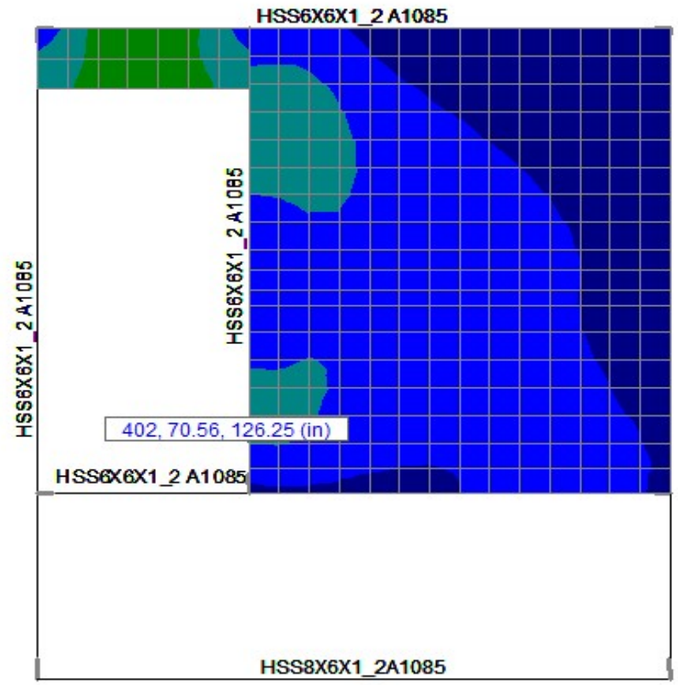


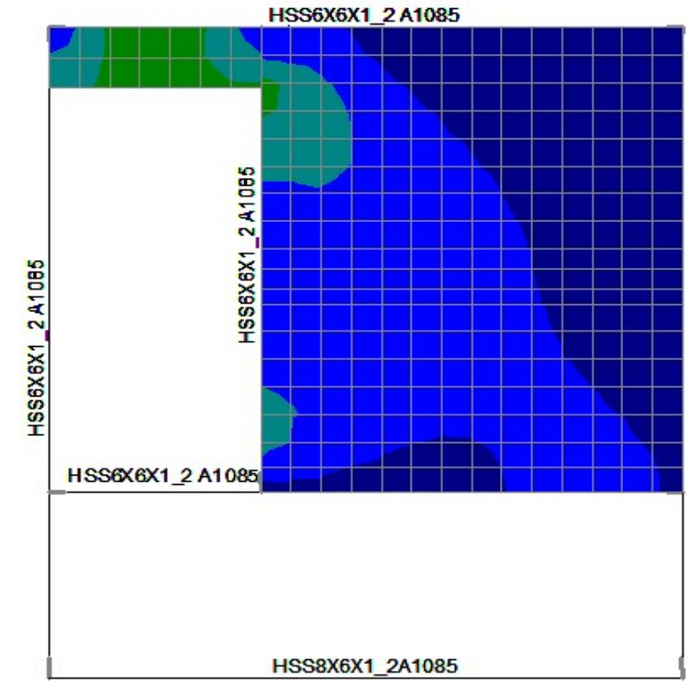


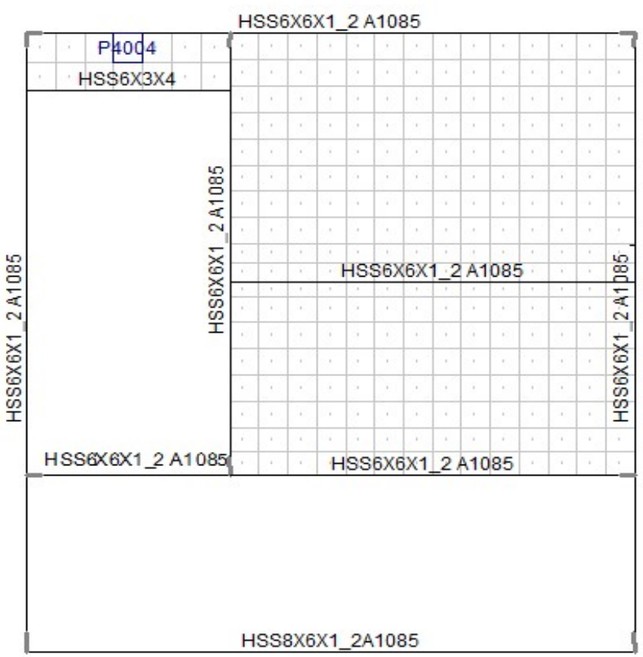


Plate Principal Stresses (By Combination)

| | L... | Plate Label | Loc | Sigma1[ksi] | Sigma2[ksi] | Tau Max[... | Angle[rad] | Von Mises[ksi] |
|---|---|---|---|---|---|---|---|---|
| 1 | 263 | P4004 | T | 4.752 | -4.508 | 4.63 | -.773 | 8.02 |
| 2 | | | B | 4.752 | -4.508 | 4.63 | -.773 | 8.02 |
| 3 | 263 | P4005 | T | 4.49 | -4.407 | 4.449 | -.767 | 7.705 |
| 4 | | | B | 4.49 | -4.407 | 4.449 | -.767 | 7.705 |

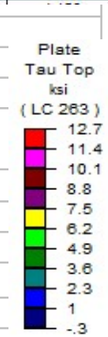


Plate Principal Stresses (By Combination)

| | L... | Plate Label | Loc | Sigma1[ksi] | Sigma2[ksi] | Tau Max[... | Angle[rad] | Von Mises[ksi] |
|---|---|---|---|---|---|---|---|---|
| 1 | 263 | P4004 | T | 4.752 | -4.508 | 4.63 | -.773 | 8.02 |
| 2 | | | B | 4.752 | -4.508 | 4.63 | -.773 | 8.02 |
| 3 | 263 | P4005 | T | 4.49 | -4.407 | 4.449 | -.767 | 7.705 |
| 4 | | | B | 4.49 | -4.407 | 4.449 | -.767 | 7.705 |

# Left Side - Inner Skin Plates

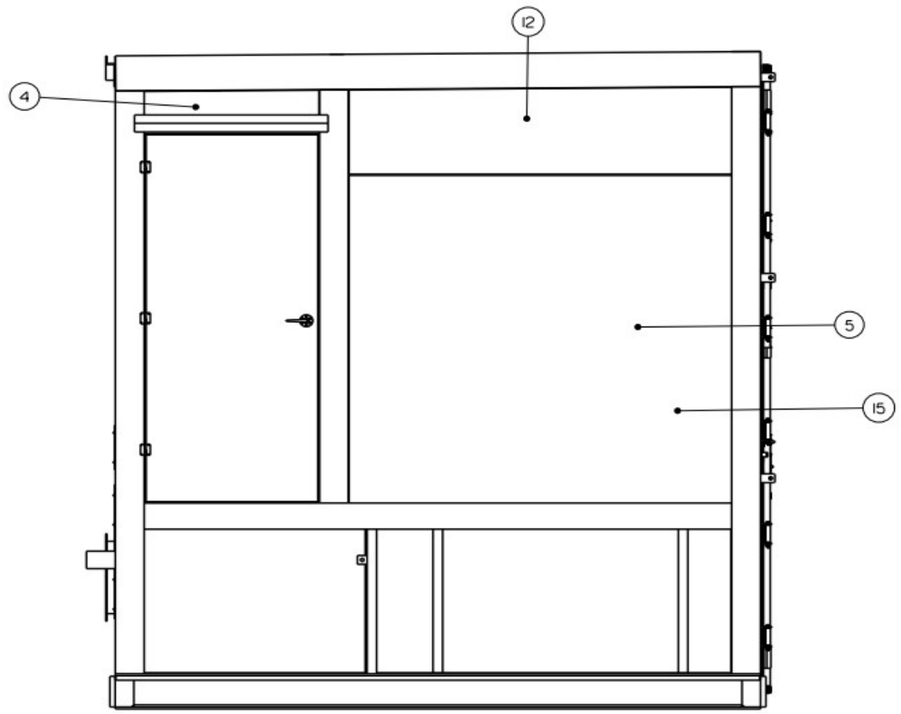


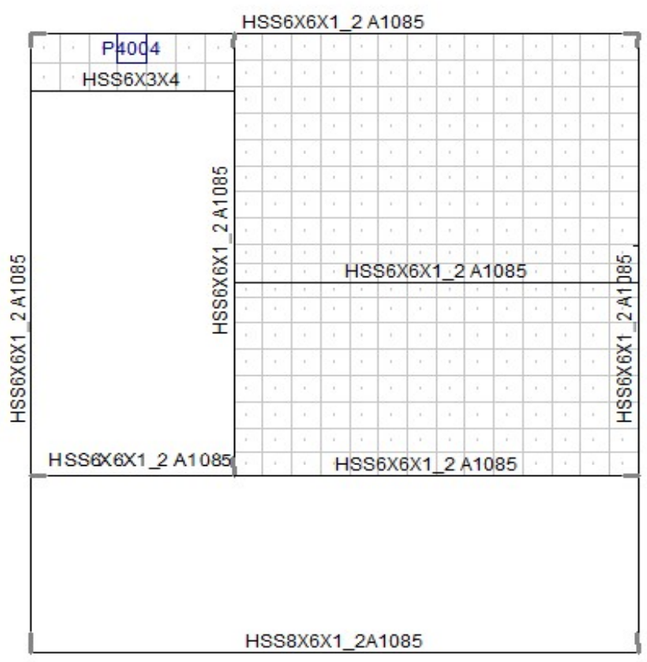


**Plates - Theoretical Shear Buckling Stresses**

| Plate No. | Thickness | Length, a | Width, b | $\alpha$ | $1/\alpha$ | Ks (fixed) | $\sigma_c$ (fixed) | Stiffener Spacing |
|---|---|---|---|---|---|---|---|---|
| 4 | 0.120 | 37.125 | 6.125 | 6.061 | 0.16 | 9.13 | 91.88 ksi | Not Reqd |
| 5 | 0.120 | 79.625 | 74.625 | 1.067 | 0.94 | 13.90 | 0.94 ksi | 30x24 |
| 12 | 0.120 | 79.625 | 19.875 | 4.006 | 0.25 | 9.33 | 8.91 ksi | 30x24 |
| Stiff Spacing = | 0.120 | 30.000 | 24.000 | 1.250 | 0.80 | 12.56 | 8.23 ksi | |

**Stiffener Spacing to Prevent Buckling**

Plate Principal Stresses (By Combination)

| | L... | Plate Label | Loc | Sigma1[ksi] | Sigma2[ksi] | Tau Max[... | Angle[rad] | Von Mises[ksi] |
|---|---|---|---|---|---|---|---|---|
| 1 | 263 | P4004 | T | 4.752 | -4.508 | 4.63 | -.773 | 8.02 |
| 2 | | | B | 4.752 | -4.508 | 4.63 | -.773 | 8.02 |
| 3 | 263 | P4005 | T | 4.49 | -4.407 | 4.449 | -.767 | 7.705 |
| 4 | | | B | 4.49 | -4.407 | 4.449 | -.767 | 7.705 |

Plate Principal Stresses (By Combination)

| | L... | Plate Label | Loc | Sigma1[ksi] | Sigma2[ksi] | Tau Max[... | Angle[rad] | Von Mises[ksi] |
|---|---|---|---|---|---|---|---|---|
| 1 | 263 | P4004 | T | 4.752 | -4.508 | 4.63 | -.773 | 8.02 |
| 2 | | | B | 4.752 | -4.508 | 4.63 | -.773 | 8.02 |
| 3 | 263 | P4005 | T | 4.49 | -4.407 | 4.449 | -.767 | 7.705 |
| 4 | | | B | 4.49 | -4.407 | 4.449 | -.767 | 7.705 |

| ITEM | QTY | DESCRIPTION | SPEC AND/OR PART NO | WRPS QL |
|---|---|---|---|---|
| 13 | 1 | PLATE. 45-1/2" X 29-1/4" X 1/8" THK., C.S.. SEE ITEM 13 DETAIL ON SHT. 30 | ASTM A36 | 2 |
| 12 | 1 | PLATE. 79-5/8" X 19-7/8" X 1/8" THK., C.S.. SEE ITEM 12 DETAIL ON SHEET 30 | ASTM A36 | 3 |
| 11 | 3 | PLATE. 69-7/8" X 38-1/2" X 1/8" THK., C.S. | ASTM A36 | 2 |
| 10 | 2 | PLATE. 50-1/8" X 59-1/2" X 1/8" THK., C.S. | ASTM A36 | 2 |
| 9 | 6 | PLATE. 49-3/4" X 59-1/2" X 1/8" THK., C.S. | ASTM A36 | 2 |
| 8 | 2 | PLATE. 59-1/2" X 45-1/2" X 1/8" THK., C.S. | ASTM A36 | 2 |
| 7 | 2 | PLATE. 59-1/2" X 47-1/2" X 1/8" THK., C.S. | ASTM A36 | 2 |
| 6 | 1 | PLATE. 58" X 44-1/8" X 1/8" THK., C.S. | ASTM A36 | 2 |
| 5 | 1 | PLATE. 79-5/8" X 74-5/8" X 1/8" THK., C.S. | ASTM A36 | 3 |
| 4 | 1 | PLATE. 37-1/8" X 6-1/8" X 1/8" THK., C.S.. SEE ITEM 4 DETAIL ON SHT. 30 | ASTM A36 | 3 |
| 3 | 1 | PLATE. 45-3/4" X 22-5/8" X 1/8" THK., C.S.. SEE ITEM 3 DETAIL ON SHT. 30 | ASTM A36 | 2 |
| 2 | 1 | PLATE. 58 X 45-1/4" X 1/8" THK., C.S.. SEE ITEM 2 DETAIL ON SHT. 30 | ASTM A36 | 2 |
| 1 | 1 | PLATE. 82" X 58" X 1/8" THK., C.S. | ASTM A36 | 2 |

| | | | |
|---|---|---|---|
| client | Avantech | by SMV | sheet no. 155 |
| project | TSCR Process Enclosure | date 5/19 | |
| location | Hanford | checked | job no. |
| subject | ASCE 7-10 Code Requirements - Torsional Irregularity Check | date | 39001 |

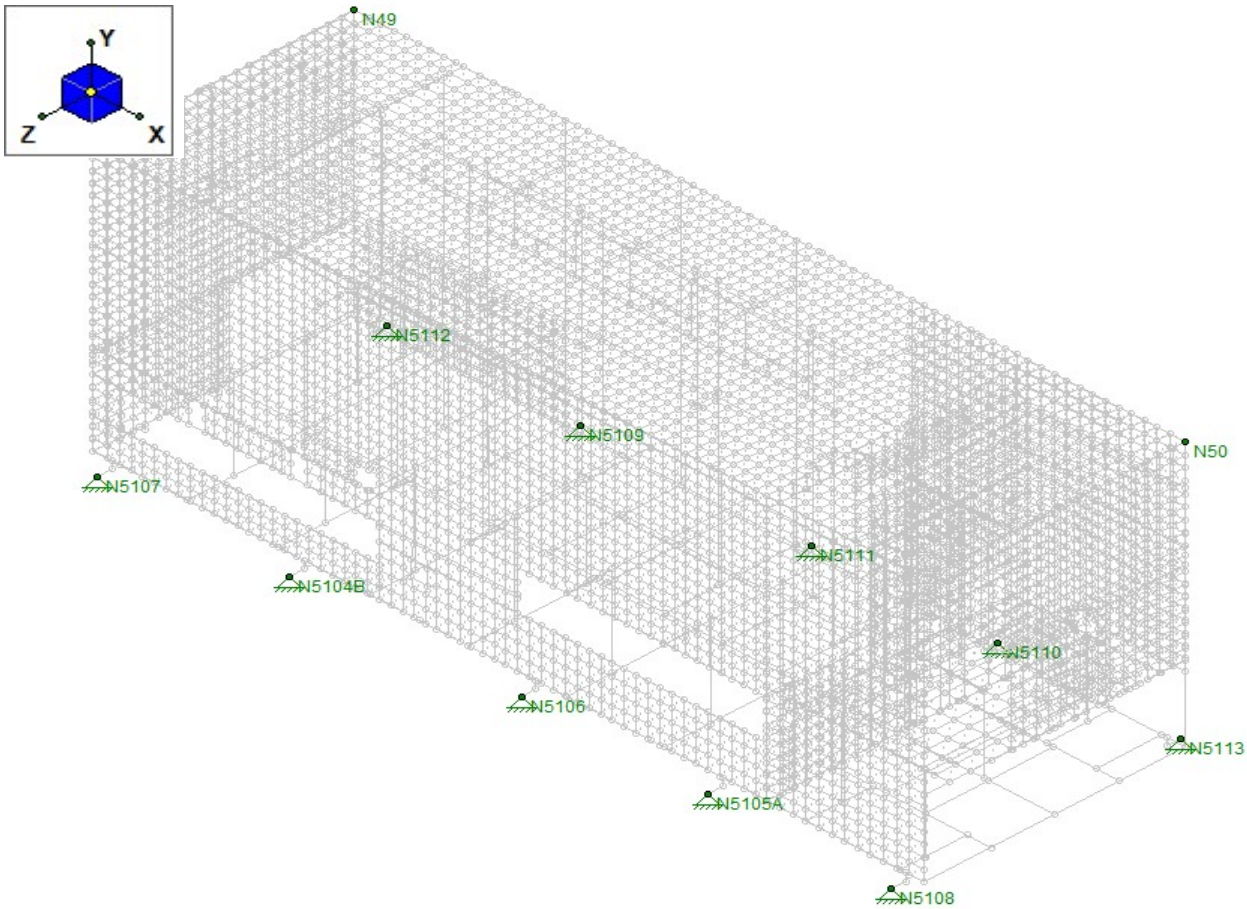


Results for LC 90, ASCE Strength 5 (b)
Member y Shear Forces (k)

Joint Deflections (By Combination)

| | L... | Joint Label | X [in] | Y [in] | Z [in] | X Rotat... | Y Rotat... | Z Rotat... |
|---|---|---|---|---|---|---|---|---|
| 49 | 90 | N49 | -.002 | .01 | .071 | 4.124e-04 | -2.1e-04 | -3.159e-04 |
| 50 | 90 | N50 | -.022 | -.002 | .065 | 3.153e-04 | 1.401e-04 | 1.678e-04 |

Drift at Node N49= 0.071 in 104%
Drift at Node N50= 0.065 in 96%
Average= 0.068 in

Max Drift in "Z" Direction less than 120% Avg = No Torsional Irregularity!

| | | | |
|---|---|---|---|
| client | Avantech | by SMV | sheet no. 156 |
| project | TSCR Process Enclosure | date 5/19 | |
| location | Hanford | checked | job no. |
| subject | ASCE 7-10 Code Requirements - Torsional Irregularity Check | date | 39001 |

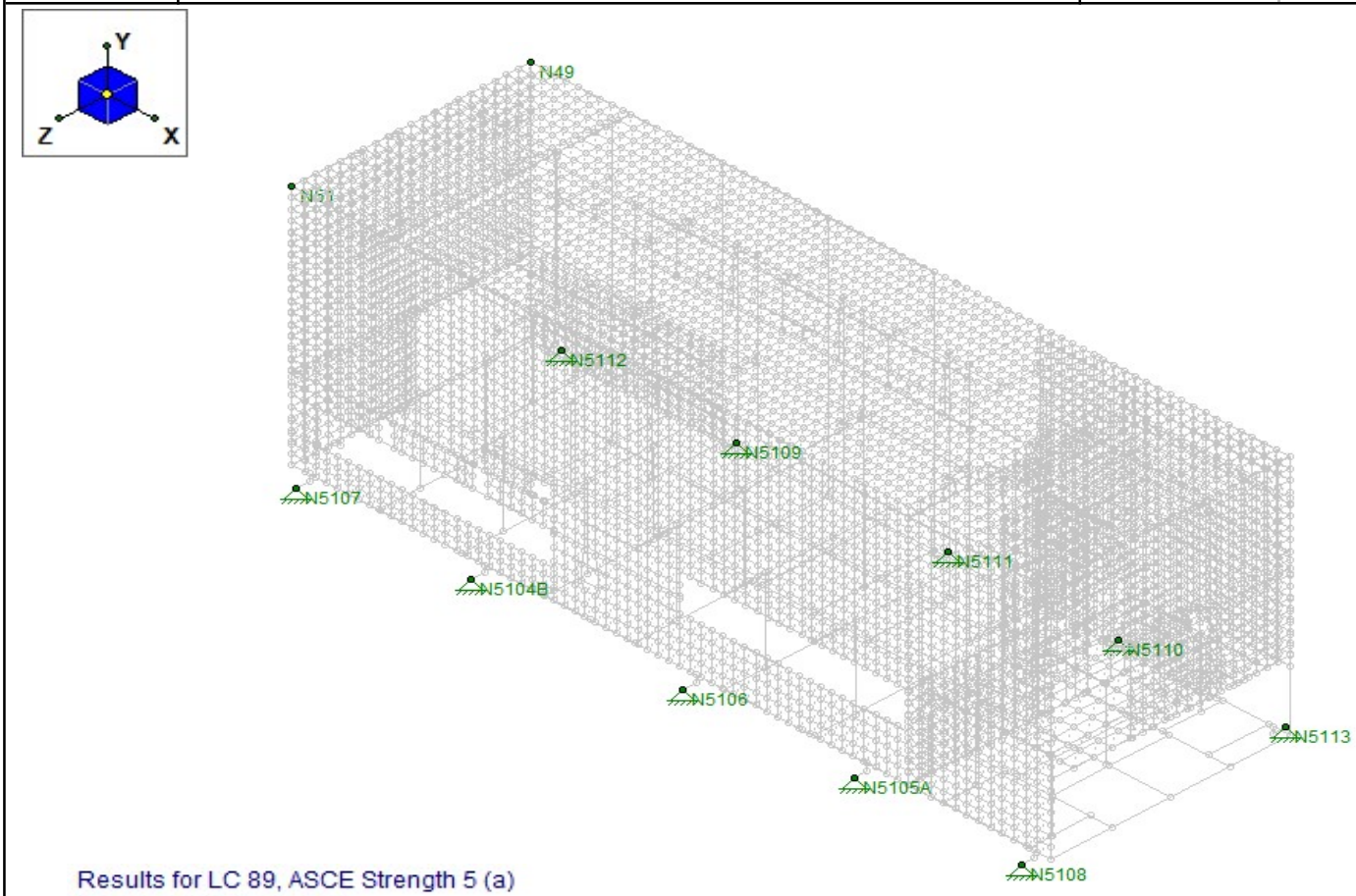


Results for LC 89, ASCE Strength 5 (a)
Member Axial Forces (k)

Joint Deflections (By Combination)

| | L... | Joint Label | X [in] | Y [in] | Z [in] | X Rotat... | Y Rotat... | Z Rotat... |
|---|---|---|---|---|---|---|---|---|
| 49 | 89 | N49 | .035 | -.005 | .005 | 8.862e-05 | -1.117e-04 | -2.709e-04 |
| 50 | 89 | N50 | .024 | -.019 | .033 | 1.365e-04 | -2.111e-05 | -5.694e-05 |
| 51 | 89 | N51 | .017 | -.006 | .004 | -3.336e-05 | -1.728e-04 | -8.564e-05 |

Drift at Node N49= 0.035 in 135%
Drift at Node N51= 0.017 in 65%
Average= 0.026 in

Max Drift in "X" Direction more than 120% Avg = Torsional Irregularity!

Note, the following 3 pages analyze the impact of the torsional irregularity by using the amplification factor from ASCE 7-10. It was found to be of negligible.

| | | | |
|---|---|---|---|
| client | Avantech | by SMV | sheet no. 157 |
| project | TSCR Process Enclosure | date 7/19 | |
| location | Hanford | checked | job no. |
| subject | ASCE 7-10 Code Requirements - Torsional Amplification | date | 39001 |

Discussion: Per ASCE 7-10 Section 12.8.4.3, where a Type 1a or 1b torsional irregularity exists, the accidental torsional moment shall be amplified.

**12.8.4.3 Amplification of Accidental Torsional Moment.** Structures assigned to Seismic Design Category C, D, E, or F, where Type 1a or 1b torsional irregularity exists as defined in Table 12.3-1 shall have the effects accounted for by multiplying $M_{ta}$ at each level by a torsional amplification factor ($A_x$) as illustrated in Fig. 12.8-1 and determined from the following equation:

$$A_x = \left(\frac{\delta_{max}}{1.2\delta_{avg}}\right)^2 \qquad (12.8\text{-}14)$$

where

$\delta_{max}$ = the maximum displacement at level $x$ computed assuming $A_x = 1$ (in. or mm)

$\delta_{avg}$ = the average of the displacements at the extreme points of the structure at level $x$ computed assuming $A_x = 1$ (in. or mm)

The torsional amplification factor ($A_x$) shall not be less than 1 and is not required to exceed 3.0. The more severe loading for each element shall be considered for design.

| | | |
|---|---|---|
| $\delta_{max}$= | 0.035 in | Drift at Node N49= |
| $\delta_{avg}$= | 0.026 in | |
| $A_{x=}$ | 1.26 | From Formula 12.8-14 Above |

Note: Amplification Factor will only apply seismic forces applied parallel to the Process Enclosure Length.

**Seismic Forces from Page 43**

**For Seismic Force Parallel to Enclosure Length (North-South Direction)**

| | | |
|---|---|---|
| Roof Accidental Torsion= | 9.84 ft-kips | Based on Story Shear x 5% of Width |
| Platform Accidental Torsion= | 2.26 ft-kips | " " |
| 1st Floor Accidental Torsion= | 0.26 ft-kips | " " |

Amplified Seismic Forces

| | |
|---|---|
| Roof Accidental Torsion= | 12.38 ft-kips |
| Platform Accidental Torsion= | 2.84 ft-kips |
| 1st Floor Accidental Torsion= | 0.33 ft-kips |

# PROCESS ENCLOSURE - ACCIDENTAL TORSIONAL LOADS WITH AMPLIFICATION FACTOR

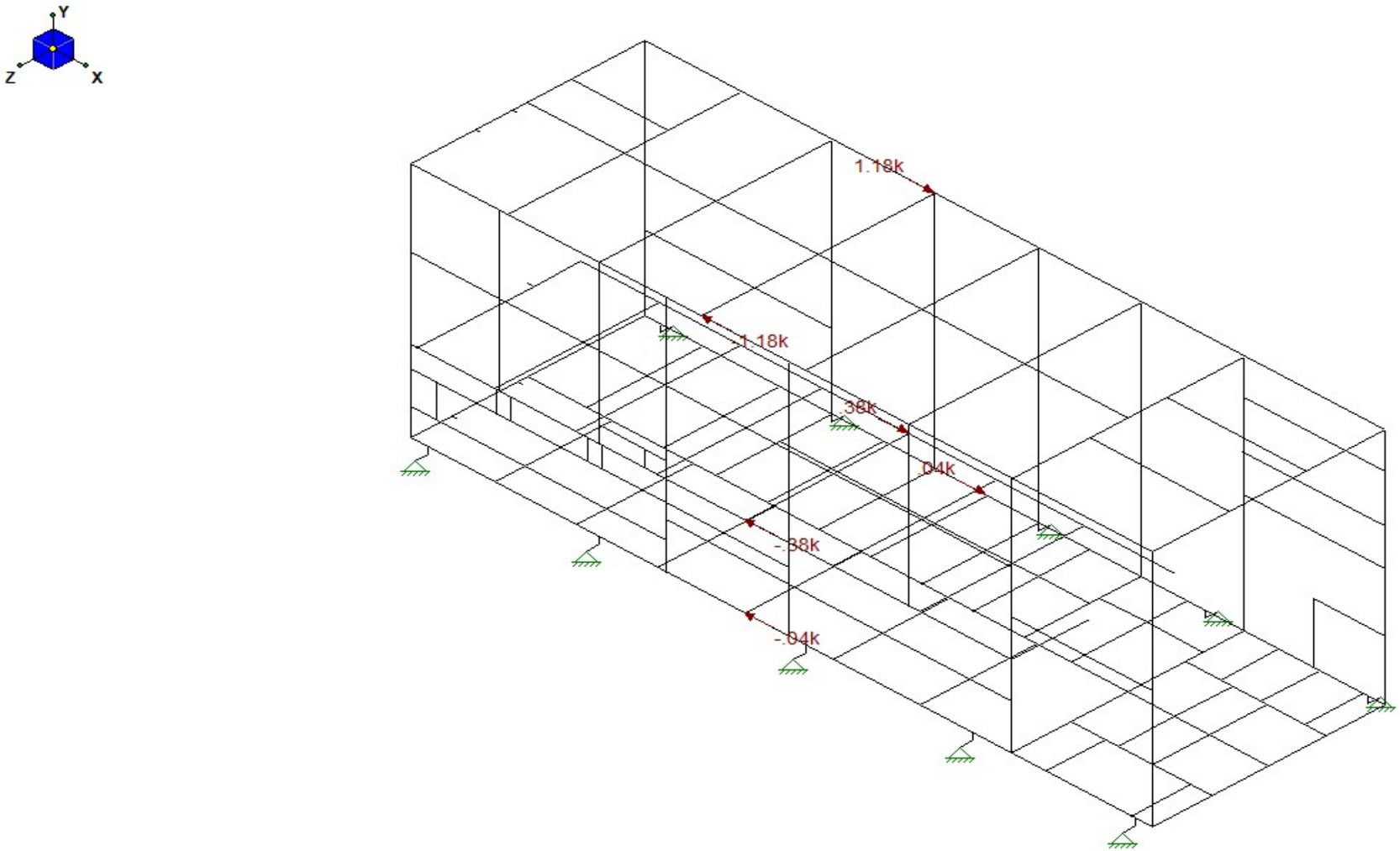

# Back View Lower Half Inner Skin Plates - Maximum Stresses with Torsional Amplification Factor

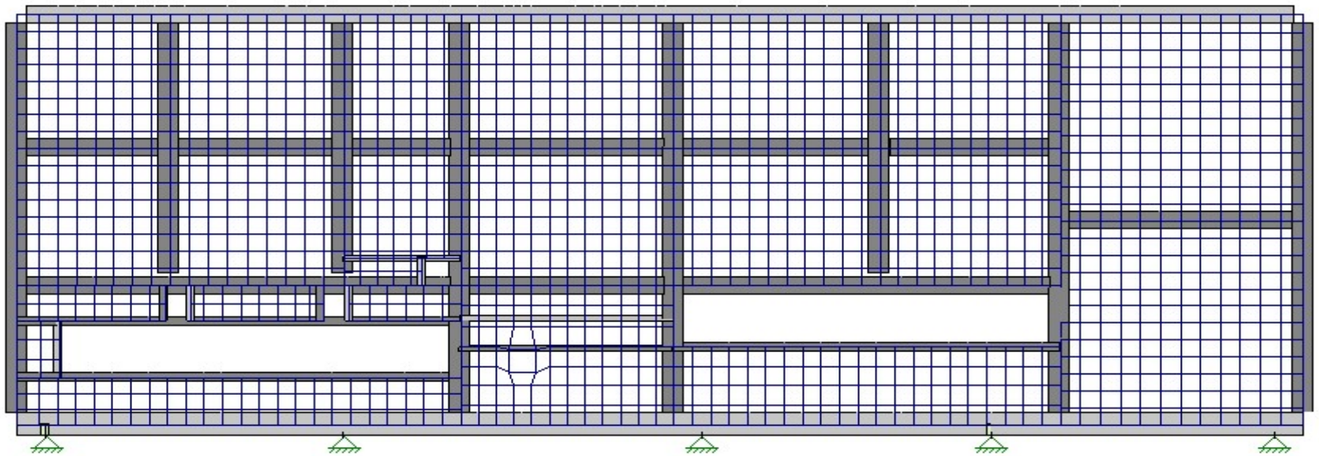

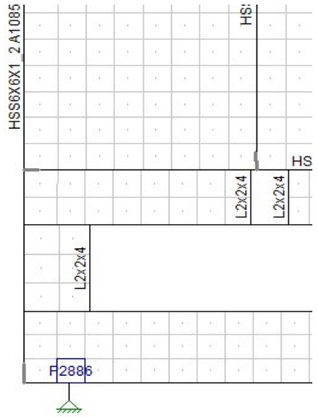


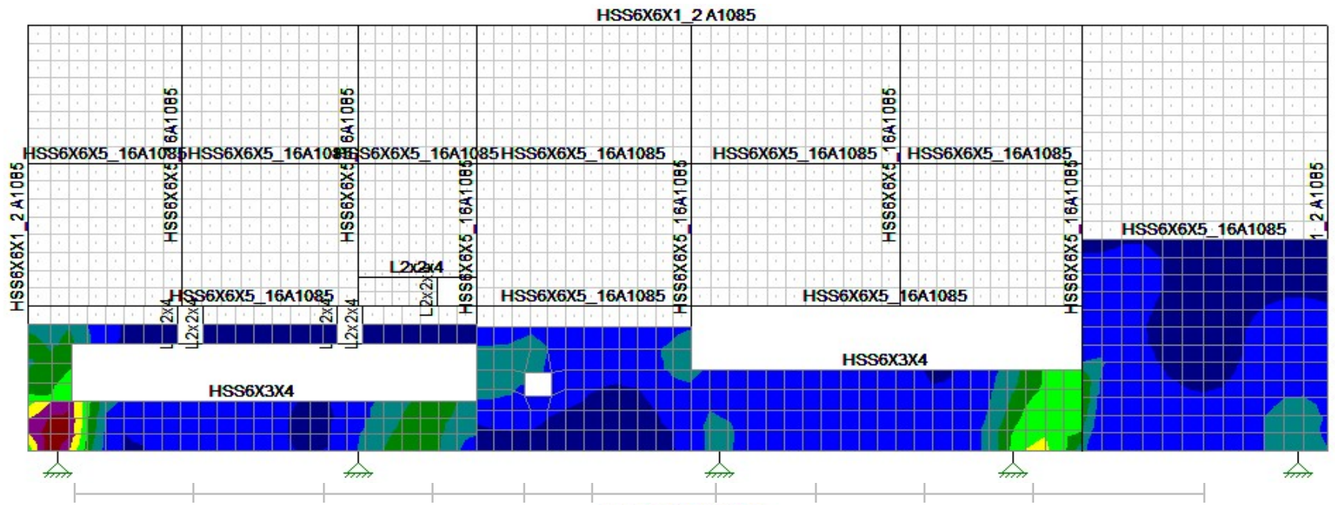


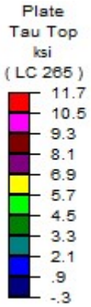


Plate Principal Stresses (By Combination)

| | L... | Plate Label | Loc | Sigma1[ksi] | Sigma2[ksi] | Tau Max[... | Angle[rad] | Von Mises[ksi] |
|---|---|---|---|---|---|---|---|---|
| 1 | 265 | P2862 | T | 3.242 | -15.042 | 9.142 | .213 | 16.898 |
| 2 | | | B | 3.242 | -15.042 | 9.142 | .213 | 16.898 |
| 3 | 265 | P2886 | T | -1.026 | -18.01 | 8.492 | .218 | 17.52 |
| 4 | | | B | -1.026 | -18.01 | 8.492 | .218 | 17.52 |

Plate Principal Stresses (By Combination)

| | L... | Plate Label | Loc | Sigma1[ksi] | Sigma2[ksi] | Tau Max[... | Angle[rad] | Von Mises[ksi] |
|---|---|---|---|---|---|---|---|---|
| 1 | 265 | P2862 | T | 3.243 | -15.05 | 9.146 | .213 | 16.906 |
| 2 | | | B | 3.243 | -15.05 | 9.146 | .213 | 16.906 |
| 3 | 265 | P2886 | T | -1.026 | -18.018 | 8.496 | .218 | 17.528 |
| 4 | | | B | -1.026 | -18.018 | 8.496 | .218 | 17.528 |

Increased stress= (9.146-9.142)*100/(9.142)= 0.04% due to amplification factor is neglible!

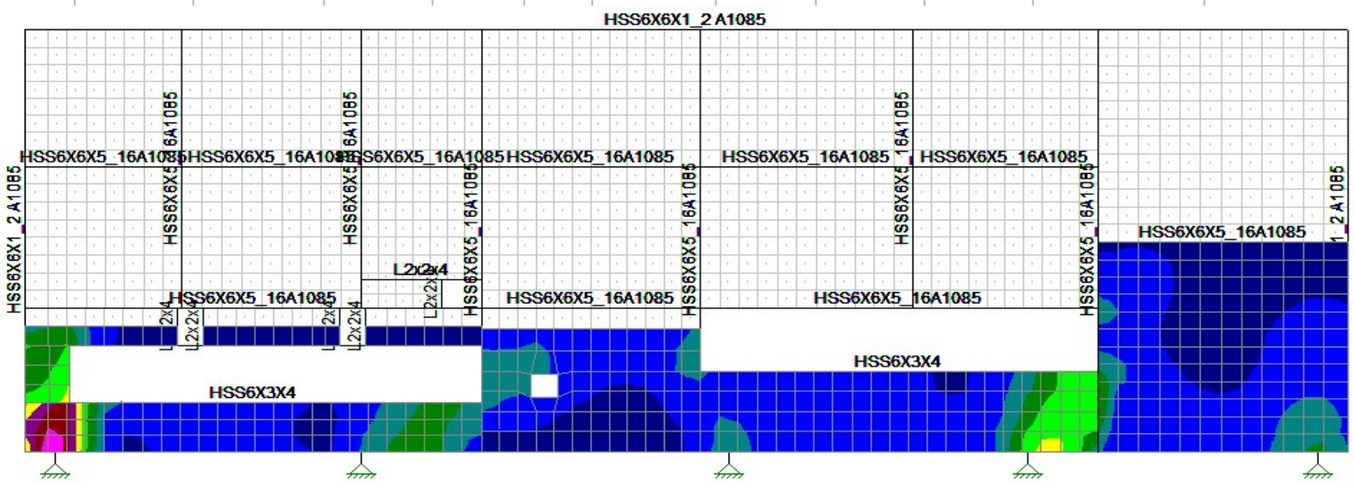


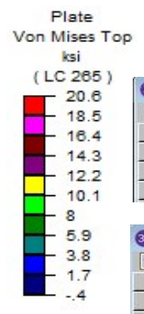


Plate Principal Stresses (By Combination)

| | L... | Plate Label | Loc | Sigma1[ksi] | Sigma2[ksi] | Tau Max[... | Angle[rad] | Von Mises[ksi] |
|---|---|---|---|---|---|---|---|---|
| 1 | 265 | P2886 | T | -1.026 | -18.01 | 8.492 | .218 | 17.52 |
| 2 | | | B | -1.026 | -18.01 | 8.492 | .218 | 17.52 |
| 3 | 265 | P2862 | T | 3.242 | -15.042 | 9.142 | .213 | 16.898 |
| 4 | | | B | 3.242 | -15.042 | 9.142 | .213 | 16.898 |

Plate Principal Stresses (By Combination)

| | L... | Plate Label | Loc | Sigma1[ksi] | Sigma2[ksi] | Tau Max[... | Angle[rad] | Von Mises[ksi] |
|---|---|---|---|---|---|---|---|---|
| 1 | 265 | P2886 | T | -1.026 | -18.018 | 8.496 | .218 | 17.528 |
| 2 | | | B | -1.026 | -18.018 | 8.496 | .218 | 17.528 |
| 3 | 265 | P2862 | T | 3.243 | -15.05 | 9.146 | .213 | 16.906 |
| 4 | | | B | 3.243 | -15.05 | 9.146 | .213 | 16.906 |

Increased stress= (17.528-17.52)*100/(17.52)= 0.05% due to amplification factor is neglible!

| | | | |
|---|---|---|---|
| client | Avantech | by SMV | sheet no. 160 |
| project | TSCR Process Enclosure | date 5/19 | |
| location | Hanford | checked | job no. |
| subject | Base Reactions Including Liner Plates - Overstrength Case | date | 39001 |

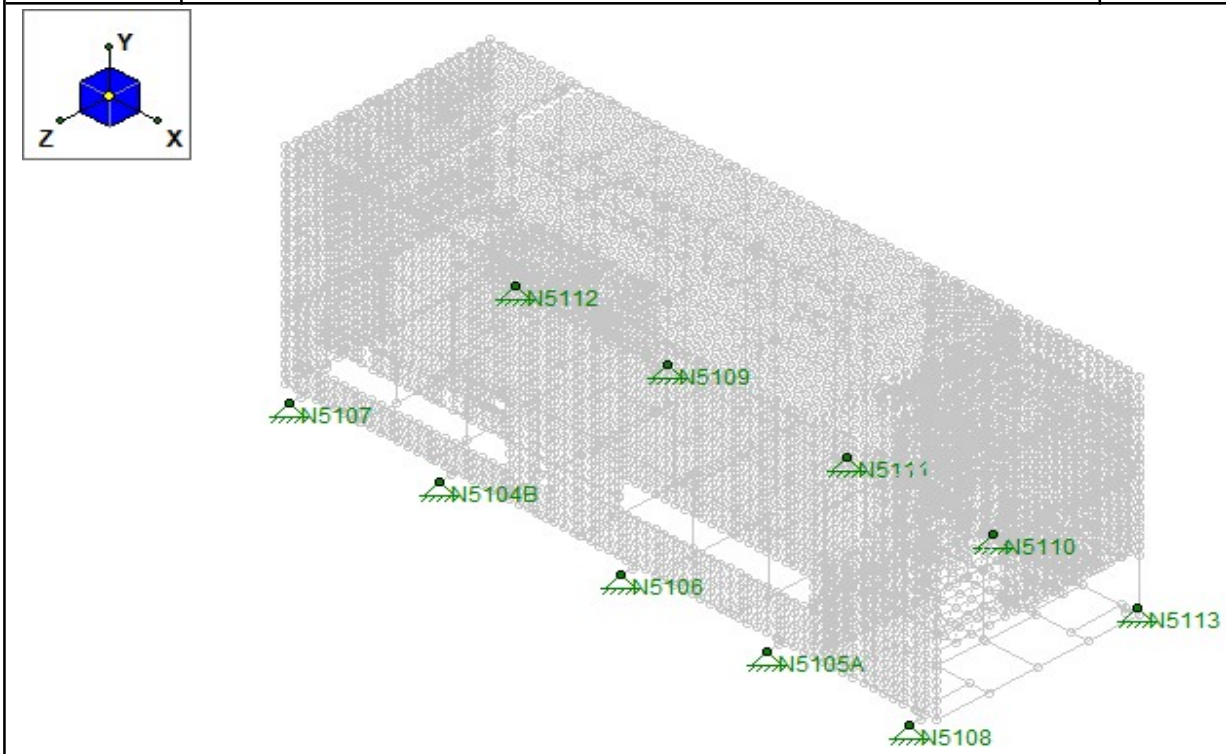


Envelope Joint Reactions - Overstrength

| | Joint | | X [k] | L... | Y [k] | L... | Z [k] | L... | MX [k-in] | L... | MY [k-in] | L... | MZ [k-in] | L... |
|---|---|---|---|---|---|---|---|---|---|---|---|---|---|---|
| 1 | N5104B | max | 35.002 | 76 | 12.273 | 76 | .794 | 85 | 0 | 85 | 0 | 85 | 0 | 85 |
| 2 | | min | -22.421 | 80 | -1.654 | 80 | -20.754 | 73 | 0 | 60 | 0 | 60 | 0 | 60 |
| 3 | N5105A | max | 42.355 | 76 | 30.4 | 71 | 12.51 | 85 | 0 | 85 | 0 | 85 | 0 | 85 |
| 4 | | min | -30.802 | 80 | -11.765 | 83 | -29.914 | 73 | 0 | 60 | 0 | 60 | 0 | 60 |
| 5 | N5106 | max | 21.732 | 82 | 24.826 | 71 | 4.31 | 85 | 0 | 85 | 0 | 85 | 0 | 85 |
| 6 | | min | -21.748 | 70 | -3.534 | 83 | -26.453 | 73 | 0 | 60 | 0 | 60 | 0 | 60 |
| 7 | N5107 | max | 13.411 | 85 | 82.8 | 73 | 16.456 | 85 | 0 | 85 | 0 | 85 | 0 | 85 |
| 8 | | min | -24.748 | 73 | -34.387 | 85 | -41.573 | 73 | 0 | 60 | 0 | 60 | 0 | 60 |
| 9 | N5108 | max | 4.47 | 82 | 59.493 | 70 | 9.545 | 83 | 0 | 85 | 0 | 85 | 0 | 85 |
| 10 | | min | -7.092 | 70 | -38.652 | 82 | -19.43 | 71 | 0 | 60 | 0 | 60 | 0 | 60 |
| 11 | N5109 | max | 27.582 | 74 | 72.146 | 70 | 33.216 | 77 | 0 | 85 | 0 | 85 | 0 | 85 |
| 12 | | min | -14.775 | 78 | 23.118 | 82 | .302 | 81 | 0 | 60 | 0 | 60 | 0 | 60 |
| 13 | N5110 | max | 16.378 | 82 | 71.317 | 75 | 45.826 | 75 | 0 | 85 | 0 | 85 | 0 | 85 |
| 14 | | min | -23.244 | 70 | -26.885 | 79 | -27.822 | 79 | 0 | 60 | 0 | 60 | 0 | 60 |
| 15 | N5111 | max | 20.131 | 84 | 68.35 | 76 | 33.795 | 75 | 0 | 85 | 0 | 85 | 0 | 85 |
| 16 | | min | -38.575 | 72 | 26.368 | 80 | -5.066 | 79 | 0 | 60 | 0 | 60 | 0 | 60 |
| 17 | N5112 | max | 14.5 | 81 | 53.078 | 77 | 28.928 | 77 | 0 | 85 | 0 | 85 | 0 | 85 |
| 18 | | min | -15.797 | 77 | -43.902 | 81 | -21.03 | 81 | 0 | 60 | 0 | 60 | 0 | 60 |
| 19 | N5113 | max | 15.87 | 74 | 37.422 | 77 | 13.59 | 77 | 0 | 85 | 0 | 85 | 0 | 85 |
| 20 | | min | -12.257 | 78 | -22.18 | 81 | -7.292 | 81 | 0 | 60 | 0 | 60 | 0 | 60 |
| 21 | Totals: | max | 160.031 | 76 | 240.704 | 76 | 160.031 | 75 | | | | | | |
| 22 | | min | -160.031 | 80 | 137.727 | 80 | -160.031 | 79 | | | | | | |

**Reactions with Overstrength Ω Factor**

| | | |
|---|---|---|
| **Y max=** | **82.60 kips** | **Downward - Node 5107** |
| **Y min=** | **-43.90 kips** | **Uplift - Node 5112** |
| **Xmax=** | **42.36 kips** | **Node 5105A** |
| **Zmax=** | **45.83 kips** | **Node 5110** |

| | | | |
|---|---|---|---|
| client | Avantech | by SMV | sheet no. 161 |
| project | TSCR Process Enclosure | date 5/19 | |
| location | Hanford | checked | job no. |
| subject | Base Reactions Including Liner Plates - LRFD | date | 39001 |

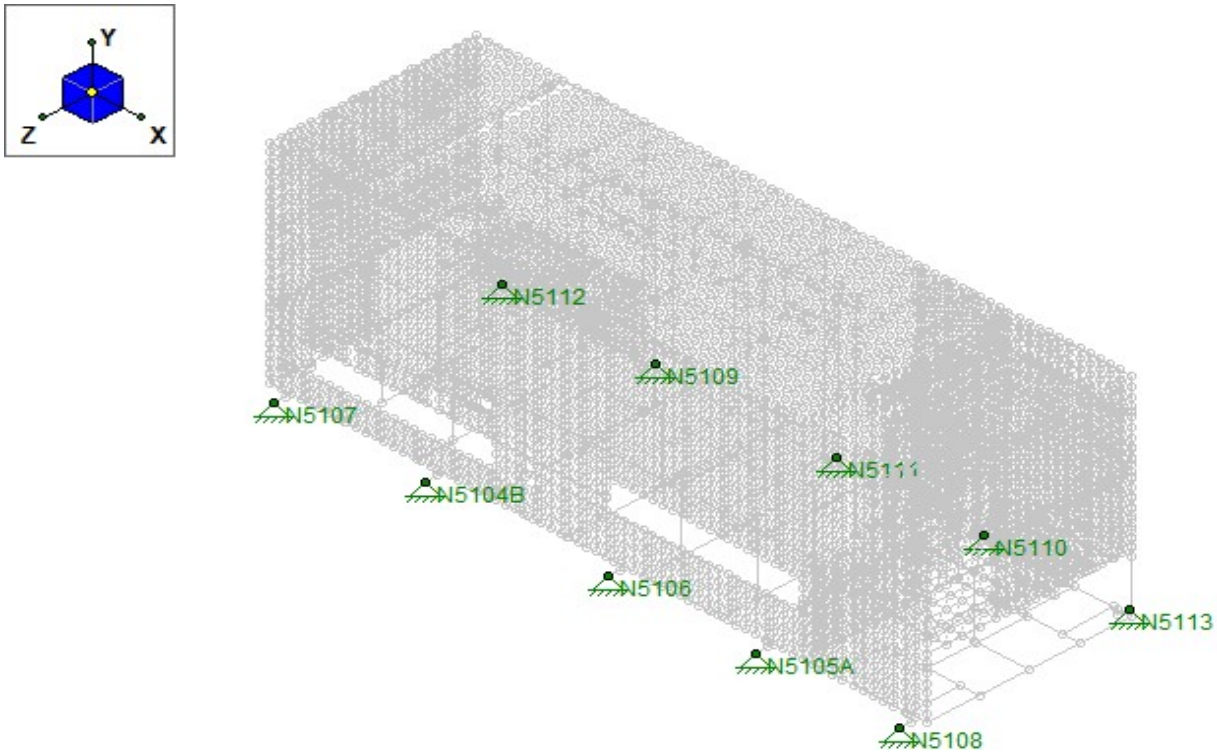


Envelope Joint Reactions

| | Joint | | X [k] | L... | Y [k] | LC | Z [k] | L... | MX [k-in] | LC | MY [k-in] | L... | MZ [k-in] | L... |
|---|---|---|---|---|---|---|---|---|---|---|---|---|---|---|
| 1 | N5104B | max | 25.556 | 48 | 10.361 | 48 | -2.02 | 57 | 0 | 248 | 0 | 248 | 0 | 248 |
| 2 | | min | -12.973 | 52 | .258 | 52 | -17.948 | 45 | 0 | 24 | 0 | 24 | 0 | 24 |
| 3 | N5105A | max | 30.087 | 48 | 23.964 | 43 | 5.933 | 57 | 0 | 248 | 0 | 248 | 0 | 248 |
| 4 | | min | -18.545 | 52 | -5.323 | 55 | -23.331 | 45 | 0 | 24 | 0 | 24 | 0 | 24 |
| 5 | N5106 | max | 14.14 | 54 | 20.932 | 43 | -.019 | 57 | 0 | 248 | 0 | 248 | 0 | 248 |
| 6 | | min | -14.149 | 42 | .347 | 55 | -22.142 | 45 | 0 | 24 | 0 | 24 | 0 | 24 |
| 7 | N5107 | max | 7.28 | 57 | 64.676 | 45 | 7.519 | 57 | 0 | 248 | 0 | 248 | 0 | 248 |
| 8 | | min | -18.594 | 45 | -16.253 | 57 | -32.617 | 45 | 0 | 24 | 0 | 24 | 0 | 24 |
| 9 | N5108 | max | 2.569 | 54 | 43.413 | 42 | 4.989 | 55 | 0 | 248 | 0 | 248 | 0 | 248 |
| 10 | | min | -5.204 | 42 | -22.568 | 54 | -14.876 | 43 | 0 | 24 | 0 | 24 | 0 | 24 |
| 11 | N5109 | max | 20.742 | 46 | 67.952 | 42 | 29.076 | 49 | 0 | 248 | 0 | 248 | 0 | 248 |
| 12 | | min | -7.931 | 50 | 27.301 | 54 | 4.467 | 53 | 0 | 24 | 0 | 24 | 0 | 24 |
| 13 | N5110 | max | 9.76 | 54 | 56.234 | 47 | 33.826 | 47 | 0 | 248 | 0 | 248 | 0 | 248 |
| 14 | | min | -16.615 | 42 | -11.806 | 51 | -15.832 | 51 | 0 | 24 | 0 | 24 | 0 | 24 |
| 15 | N5111 | max | 10.698 | 56 | 65.335 | 48 | 28.37 | 47 | 0 | 248 | 0 | 248 | 0 | 248 |
| 16 | | min | -29.143 | 44 | 29.386 | 52 | .393 | 51 | 0 | 24 | 0 | 24 | 0 | 24 |
| 17 | N5112 | max | 9.262 | 53 | 36.52 | 49 | 20.565 | 49 | 0 | 248 | 0 | 248 | 0 | 248 |
| 18 | | min | -10.55 | 49 | -27.388 | 53 | -12.707 | 53 | 0 | 24 | 0 | 24 | 0 | 24 |
| 19 | N5113 | max | 11.114 | 46 | 27.735 | 49 | 10.271 | 49 | 0 | 248 | 0 | 248 | 0 | 248 |
| 20 | | min | -7.521 | 50 | -12.501 | 53 | -3.968 | 53 | 0 | 24 | 0 | 24 | 0 | 24 |
| 21 | Totals: | max | 104.02 | 48 | 246.569 | 24 | 104.02 | 47 | | | | | | |
| 22 | | min | -104.02 | 52 | 137.727 | 52 | -104.02 | 43 | | | | | | |

**Envelope LRFD Base Reactions**

| | | |
|---|---|---|
| **Y max=** | **67.96 kips** | **Downward - Node 5109** |
| **Y min=** | **-27.40 kips** | **Uplift - Node 5112** |
| **Xmax=** | **30.09 kips** | **Node 5105A** |
| **Zmax=** | **33.83 kips** | **Node 5110** |

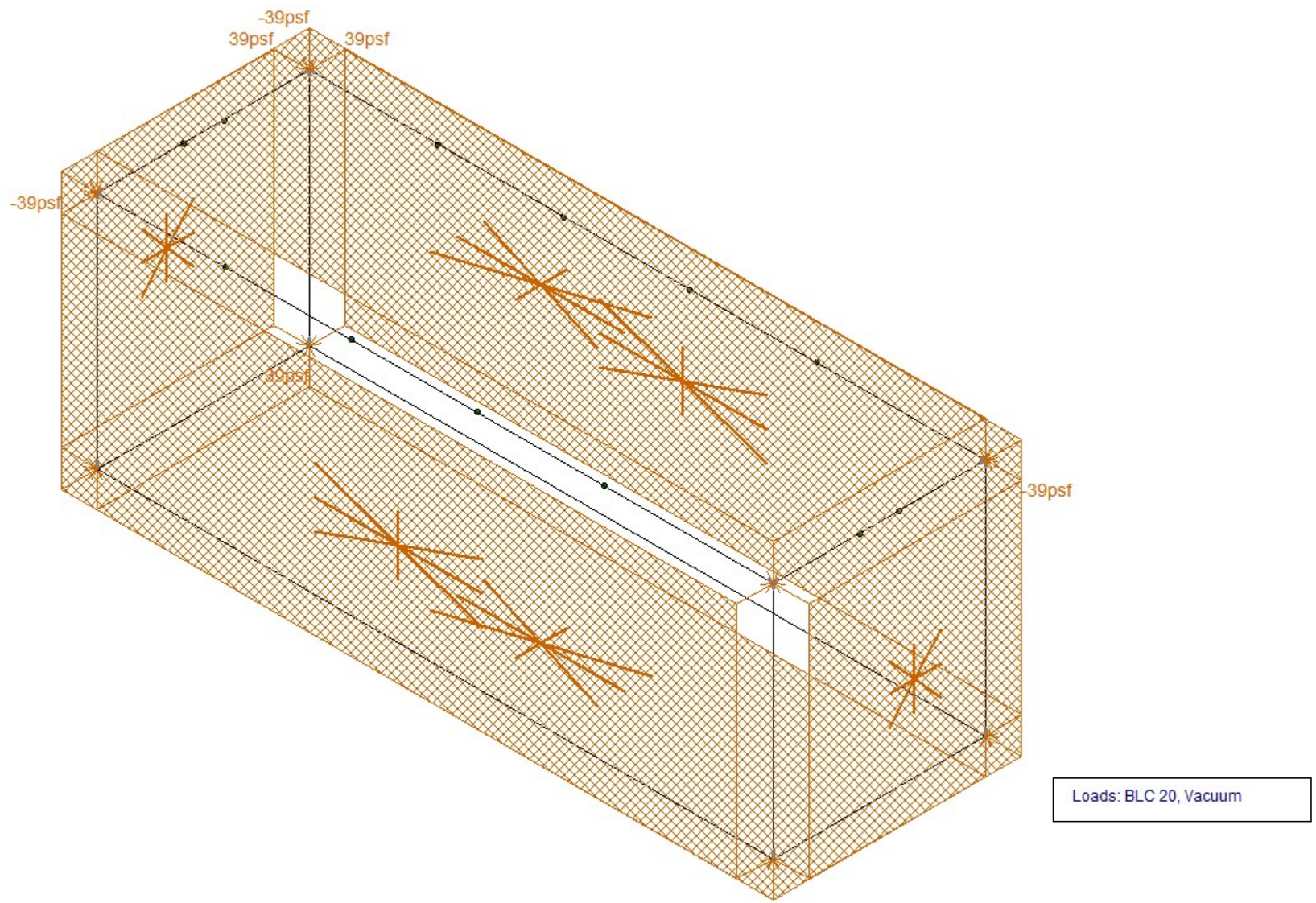


**TSCR PROCESS ENCLOSURE SKID – MAJOR FRAMING – VACUUM LOADING @ 7.5" w.g**

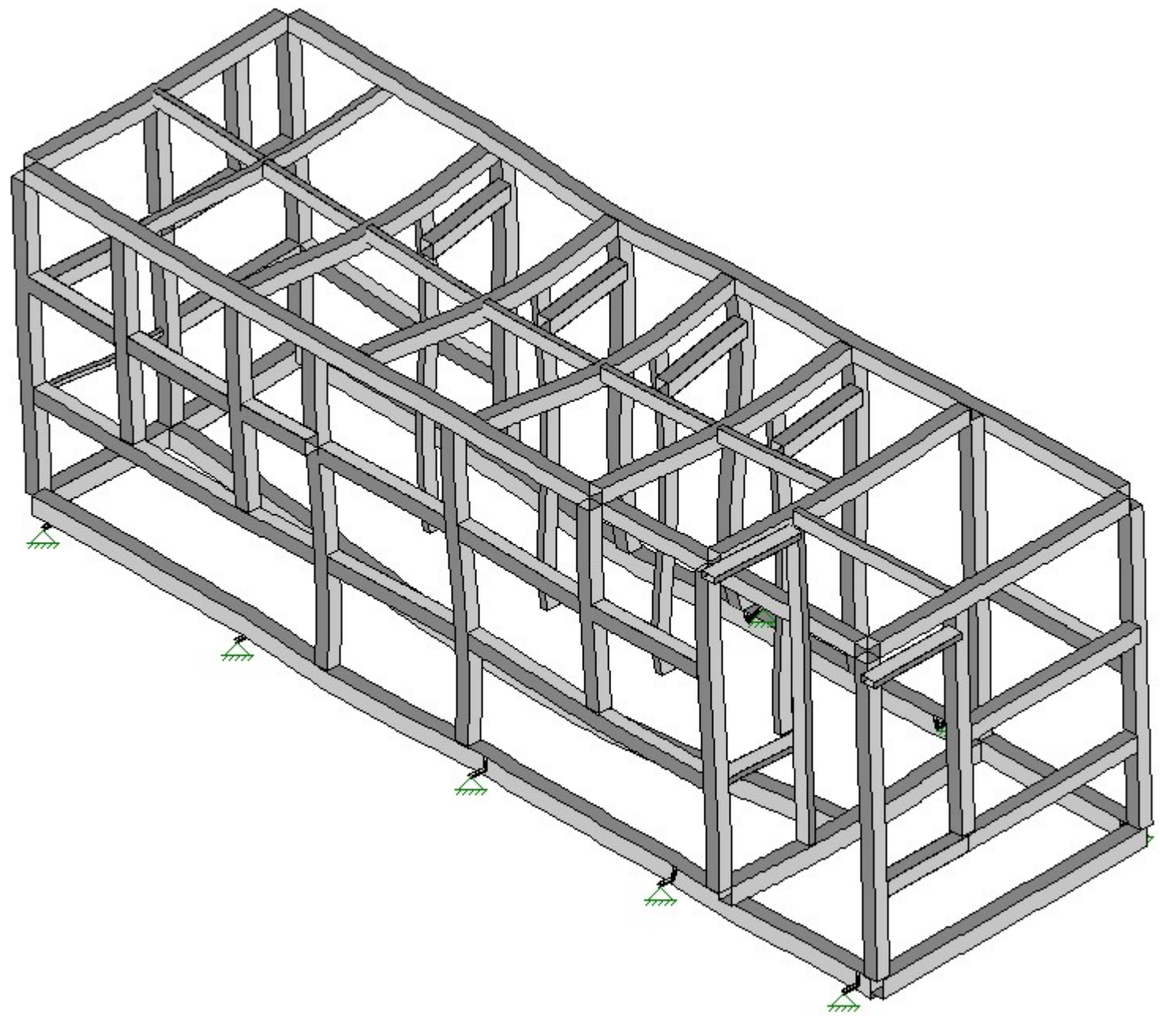

Results for LC 19, Vacuum + Dead Load

**TSCR PROCESS ENCLOSURE SKID – MAJOR FRAMING – DEFLECTED SHAPE DURING VACUUM**

**Note: Deflected Shape is Magnified by 60 Times Actual Deflection**

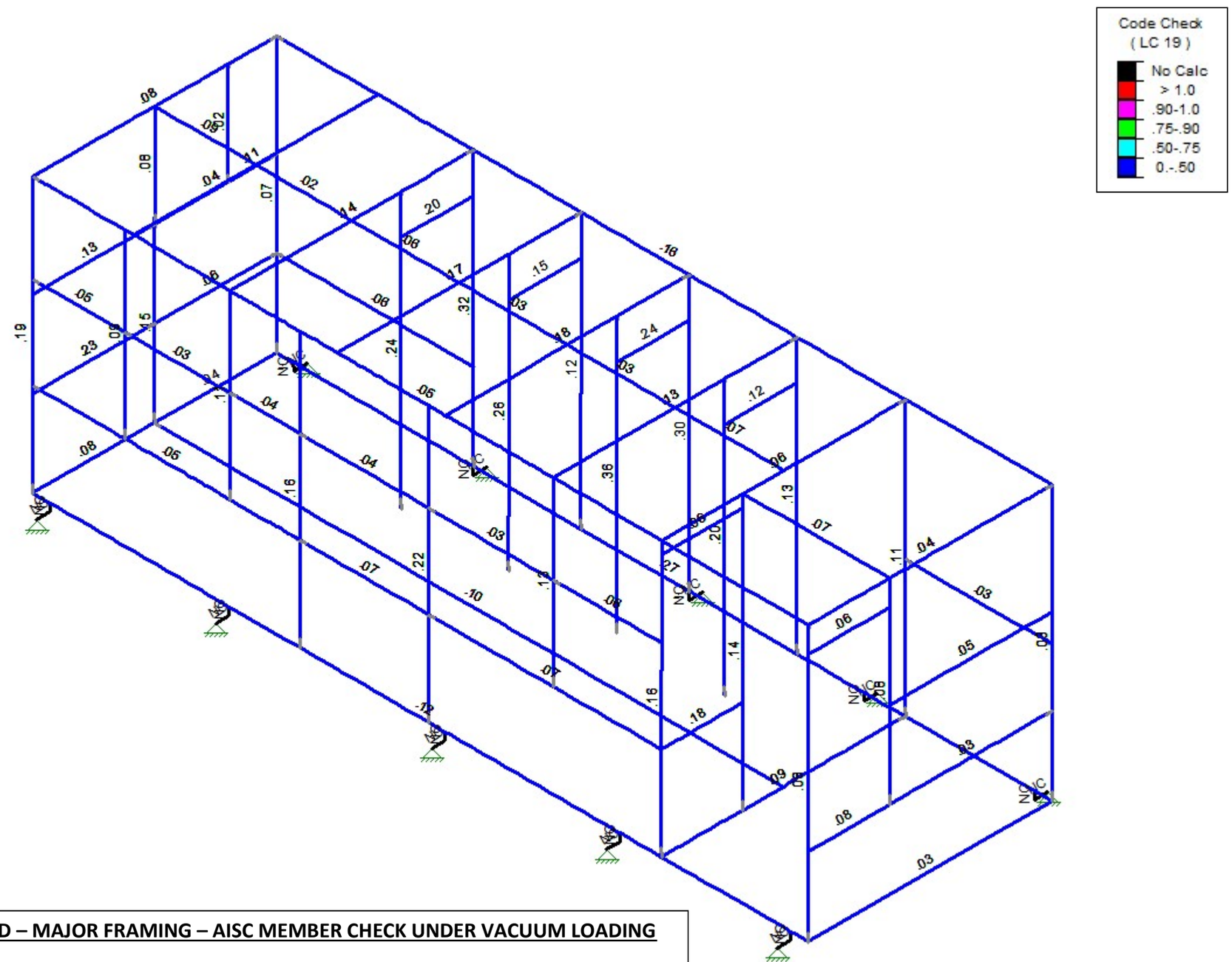


**TSCR PROCESS ENCLOSURE SKID – MAJOR FRAMING – AISC MEMBER CHECK UNDER VACUUM LOADING**

LEAD BLANKET SHIELDING LOAD, TREAT AS A ROOF LIVE LOAD

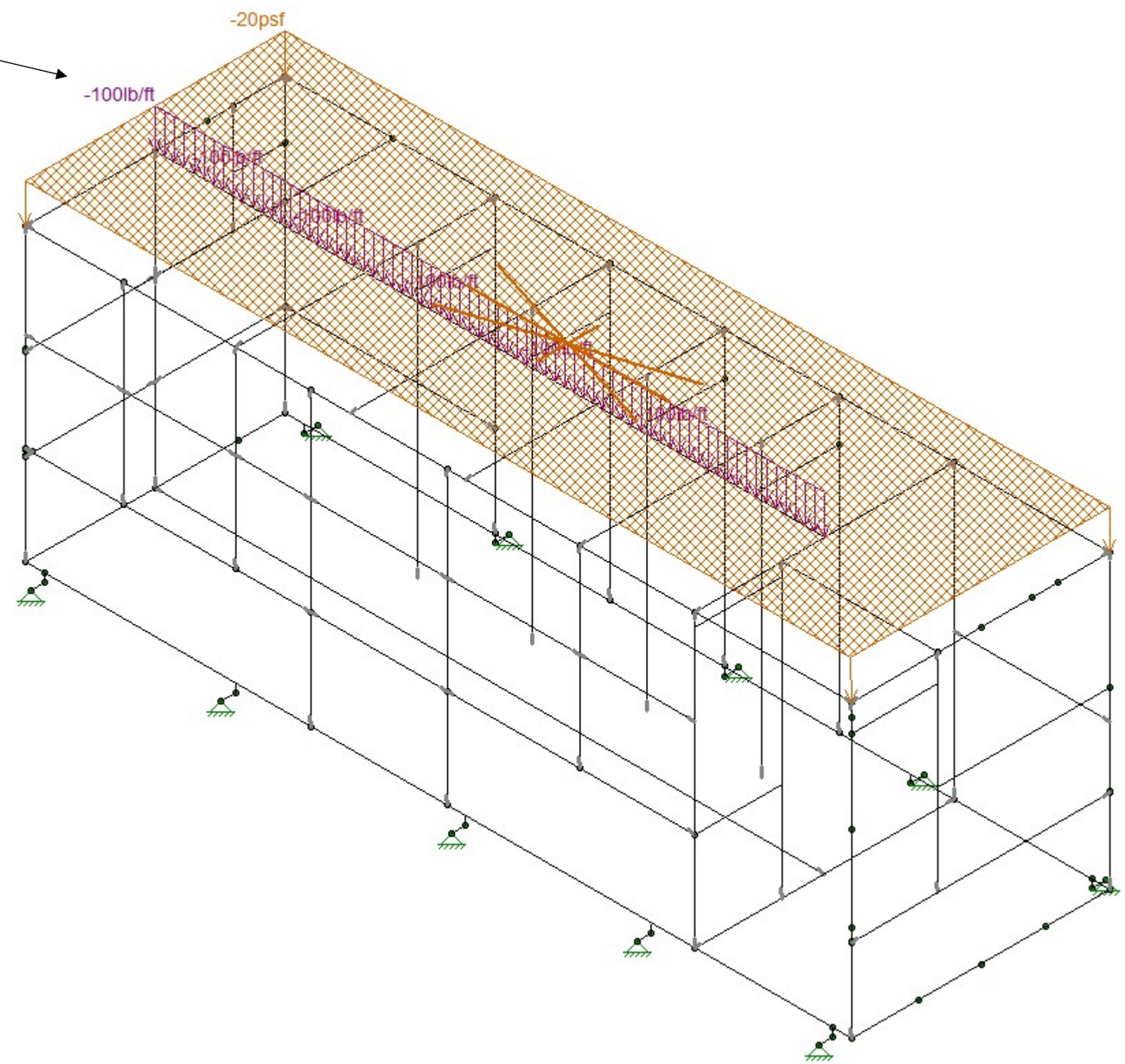


**TSCR PROCESS ENCLOSURE SKID – LEAD BLANKET/SHIELDING LOADING @ ROOF**

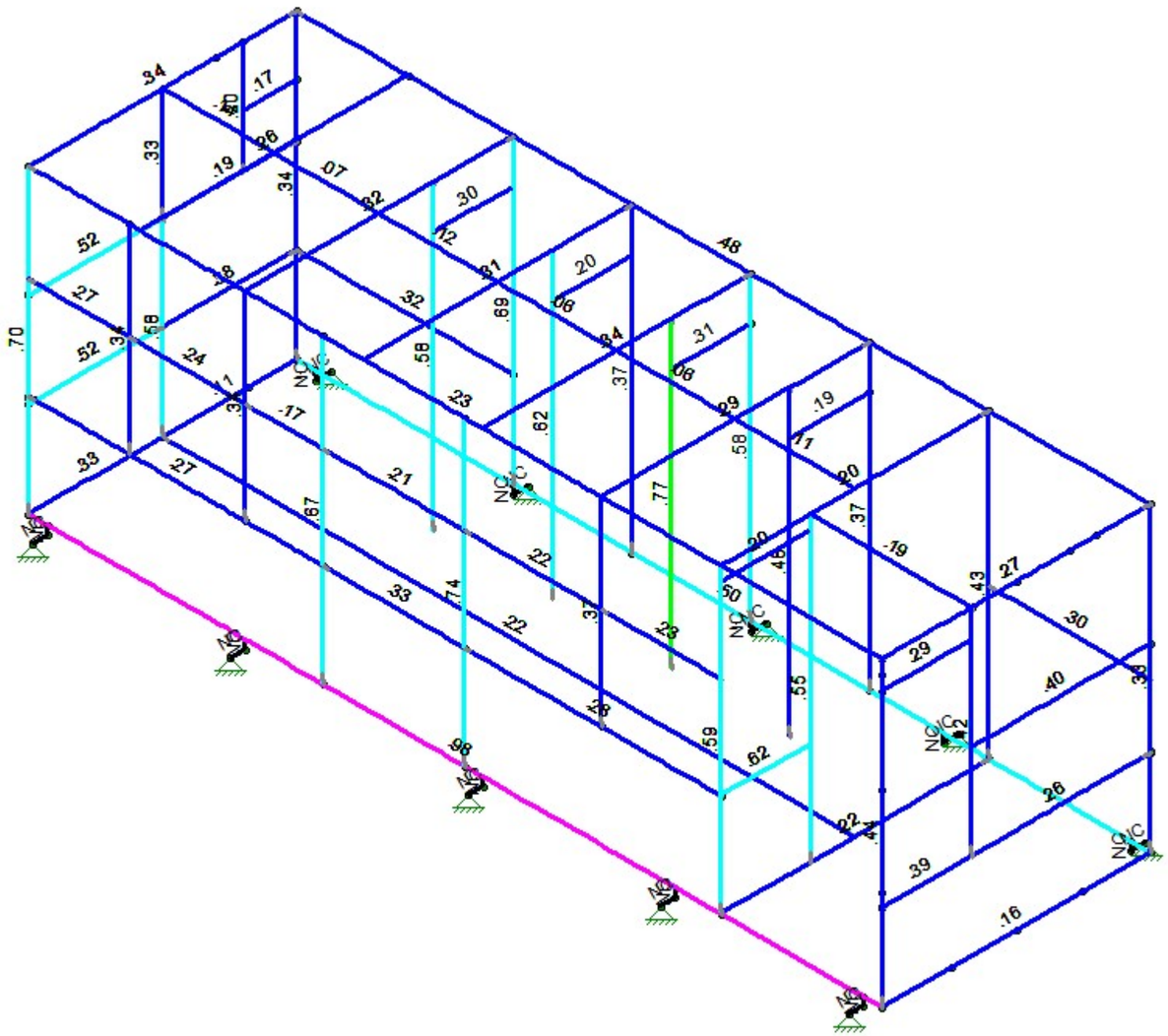

**TSCR PROCESS ENCLOSURE SKID – MAJOR FRAMING – AISC MEMBER CHECK WITH LEAD BLANKET/SHIELDING LOAD**

| client | Avantech | by SMV | sheet no. 167 |
|---|---|---|---|
| project | TSCR Process Enclosure | date 5/19 | |
| location | Hanford | checked | job no. |
| subject | ICX-150 Seismic Design Force | date | 39001 |

**Check ICX-150 as a Mechanical Non-Building Component, See ASCE 7-10 Table 13.6**

**Seismic Force Calculation** (Per ASCE 7-010)

| | | |
|---|---|---|
| Occupancy Category | IV | Per Table 5, TFC-ENG-STD-06 |
| Site Class | D | Per Site Criteria |
| $\rho$= | 1 | ASCE 7-10 Section 13.3.1 |
| $S_{DS}$= | 0.5940 | Per TFC-ENG-STD-06, For Site Class D |
| $I_p$= | 1.5 | ASCE 7-10 Sect 13.1.3 |
| $R_p$= | 2.5 | ASCE 7-10 Table 13.6-1 |
| Limit State "C" Modifier= | 1.2 | TFC-ENG-STD-06 Table 5, SDC-2, Limit State C |
| $R_{pa}$= | 2.08 | ASCE 7-10 Table 13.6-1, Mod. by SDC-2, Limit State C |
| $a_p$= | 1.00 | ASCE 7-10 Table 13.6-1 |
| z= | 10.46 ft | Height in structure of Component Attachment |
| h= | 12.50 ft | Average roof height of structure |
| $\Omega_O$= | 2.5 | Will apply for Concrete Anchorage |

**For Nonstructural Components:**

$F_p=0.4a_pS_{DS}W_p/(R_p/I_p)*(1+2z/h)$= **0.457 Wp** $F_p$=ASCE 7-10 Eq 13.3-1] USE

Fp is not required to be taken as greater than

$F_p=1.6S_{DS}I_pW_p$= 1.426 Wp [ASCE 7-10 Eq 13.3-2]

and shall not be taken less than

$F_p=0.3S_{DS}I_pW_p$= 0.267 Wp [ASCE7-10 Eq 13.3-3]

Wp= 26790 lbs

$F_p$= **12253 lbs** Apply at C.G. Vessel

**Seismic Load Effect:**

$E=E_h+E_v$ [ASCE Eq 12.4-1] $E_h=\rho Q_E$ [ASCE Eq 12.4-3]

$Q_E=F_p$ [ASCE Eq 12.4-3] $E_v=0.2*S_{DS}*D$ [ASCE Eq 13.3]

$\rho$= 1.00 [ASCE Sect 13.3]

**Seismic load combinations:**

Allowable stress design per ASCE Sect 12.4.3.2

| | | | | |
|---|---|---|---|---|
| $(1.0+0.14S_{DS})D+0.7\rho Q_E$ | = 1.08*D | + 0.70*QE | | [ASCE Eq 2.4.1.5] |
| $(1.0+0.10S_{DS})D+0.525\rho Q_E+0.75L$ | = 1.06*D | + 0.53*QE | + 0.75L | [ASCE Eq 2.4.1.6] |
| $(0.6-0.14S_{DS})D+0.7\rho Q_E$ | = 0.52*D | + 0.70*QE | | [ASCE Eq 2.4.1.8] |

Strength design per ASCE Sect 12.4.2.3

| | | | | |
|---|---|---|---|---|
| $(1.2+0.2S_{DS})D+\rho Q_E+1.0L$ | = 1.32*D | + 1.00*QE | + 1.00L | [ASCE Eq 2.3.2.5] |
| $(0.9-0.2S_{DS})D+\rho Q_E$ | = 0.78*D | + 1.00*QE | | [ASCE Eq 2.3.2.7] |

Strength Design with Overstrength Factor Per ASCE Sect 12.4.3.2

| | | | | |
|---|---|---|---|---|
| $(1.2+0.2S_{DS})D+\Omega_O Q_E+1.0L+0.2S$ | = 1.32*D | + 2.50*QE | + 1.00L | + 0.20S |
| $(0.9-0.2S_{DS})D+\Omega_O Q_E$ | = 0.90*D | + 2.50*QE | | |

| | | | |
|---|---|---|---|
| client | Avantech | by SMV | sheet no. 168 |
| project | TSCR Process Enclosure | date 8/19 | |
| location | Hanford | checked | job no. |
| subject | ICX-150 Seismic Design Force | date | 39001 |

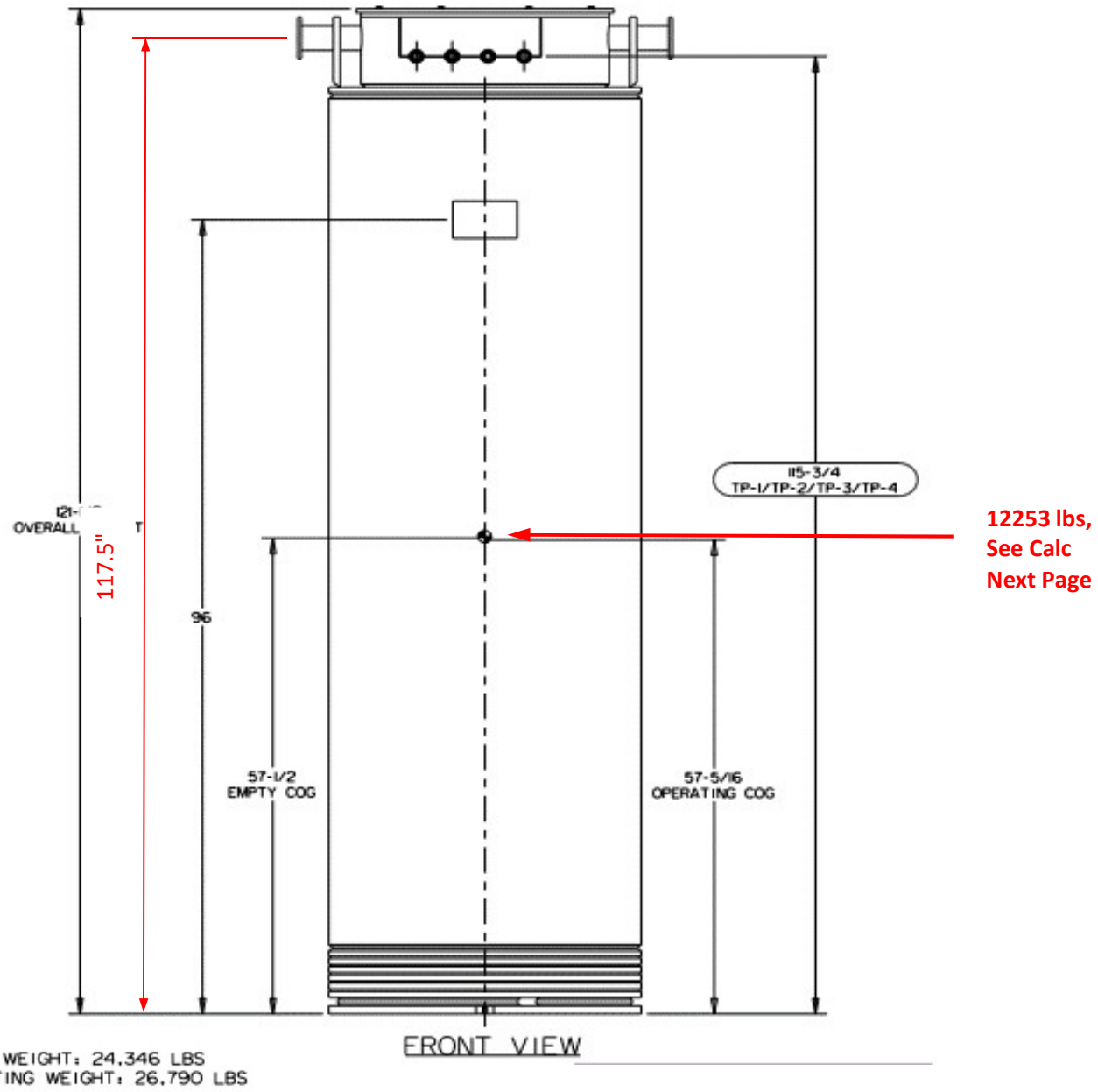


# TSCR IXC-150

| | | |
|---|---|---|
| Base Frame Height= | 8.0 in | |
| Height to C.G.= | 57.3 in | |
| Height to Attachment Point= | 117.5 in | |
| Total Height from Base "0-0"= | 125.5 in | = 10.46 ft |
| IXC Seismic Force= | 12253 lbs | See Calc Next Page |
| Top Restraint Force= | 5976 lbs | |
| Load to Each Restraint= | 2988 lbs | Use 3100 lbs to Match Process Enclosure Calculations Page 61 |

| | | | |
|---|---|---|---|
| client | Avantech | by SMV | sheet no. 169 |
| project | TSCR Process Enclosure | date 5/19 | |
| location | Hanford | checked | job no. |
| subject | WP-FLT-325 A/B Filter Tanks | date | 39001 |

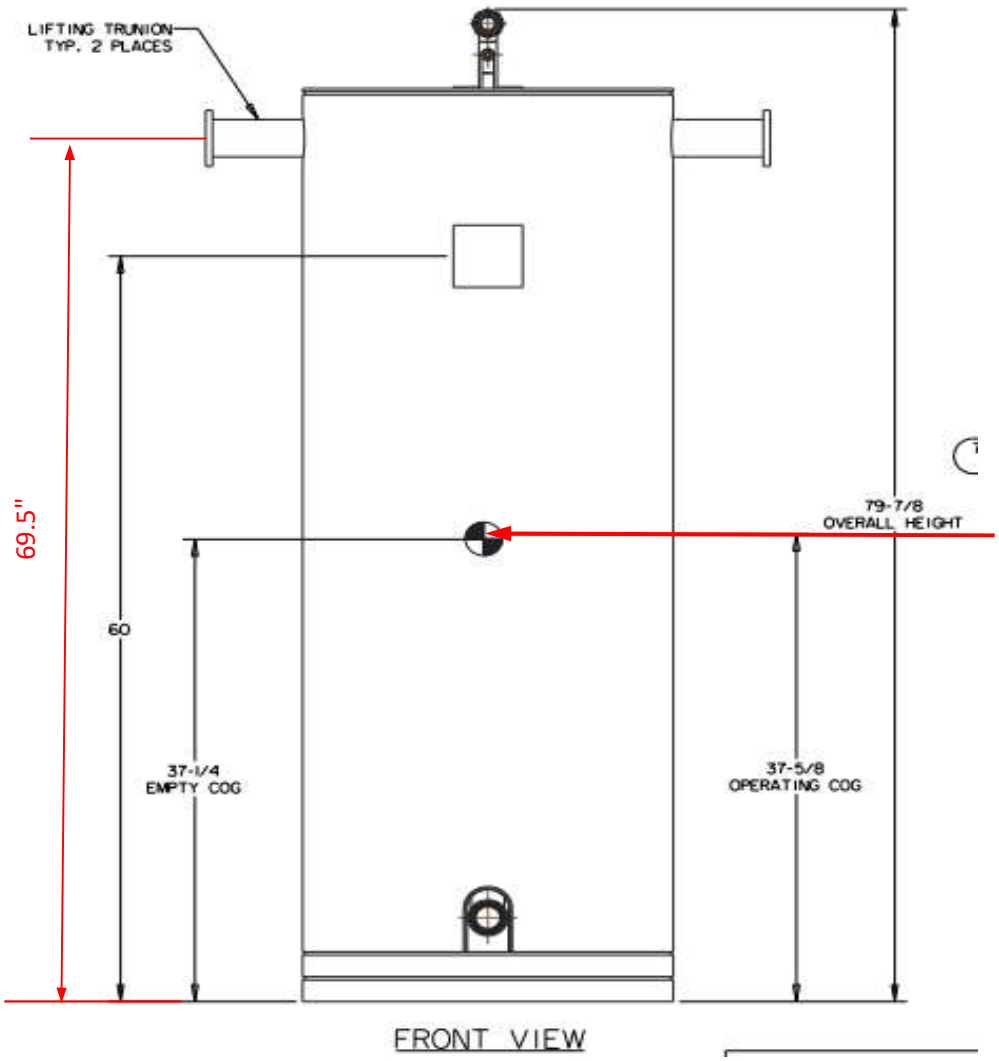


**3745 lbs, See Calc Next Page**

NOTES:
1. EMPTY VESSEL WEIGHT (W/ SHIELDING): 7,832 LBS
2. OPERATING VESSEL WEIGHT (W/ SHIELDING): 8,388 LBS
3. ITEMS 2, 3, & 4 ARE FOR VESSEL REMOVAL

# WP-FLT-325 A/B

| | | |
|---|---|---|
| Base Frame Height = | 51.3 in | Top of Tube Stand to Base Elevation |
| Height to C.G.= | 37.63 in | From Base of Vessel |
| Height to Trunnion Attachment Point = | 69.5 in | Bottom of Vessel to Trunnion |
| Total Attachment Point Height from Base= | 120.8 in | = 10.06 ft |
| IXC Seismic Force= | 3745 lbs | See Calc Next Page |
| Top Restraint Force= | 2027 lbs | |
| Load to Each Restraint= | 1014 lbs | Say 1050 lbs |

| client | Avantech | by SMV | sheet no. 170 |
|---|---|---|---|
| project | TSCR Process Enclosure | date 5/19 | |
| location | Hanford | checked | job no. |
| subject | WP-FLT-325 A/B Filter Tanks | date | 39001 |

**Check FLT 325-AB as a Mechanical Non-Building Component, See ASCE 7-10 Table 13.6**

**Seismic Force Calculation** (Per ASCE 7-010)

| | | |
|---|---|---|
| Occupancy Category | IV | Per Table 5, TFC-ENG-STD-06 |
| Site Class | D | Per Site Criteria |
| $\rho$= | 1 | ASCE 7-10 Section 13.3.1 |
| $S_{DS}$= | 0.5940 | Per TFC-ENG-STD-06, For Site Class D |
| $I_p$= | 1.5 | ASCE 7-10 Sect 13.1.3 |
| $R_p$= | 2.5 | ASCE 7-10 Table 13.6-1 |
| Limit State "C" Modifier= | 1.2 | TFC-ENG-STD-06 Table 5, SDC-2, Limit State C |
| $R_{pa}$= | 2.08 | ASCE 7-10 Table 13.6-1, Mod. by SDC-2, Limit State C |
| $a_p$= | 1.00 | ASCE 7-10 Table 13.6-1 |
| z= | 10.06 ft | Height in structure of Component Attachment |
| h= | 12.50 ft | Average roof height of structure |
| $\Omega_O$= | 2.5 | Will apply for Concrete Anchorage |

**For Nonstructural Components:**

$F_p=0.4a_pS_{DS}W_p/(R_p/I_p)*(1+2z/h)$= **0.446 Wp** $F_p$=ASCE 7-10 Eq 13.3-1] USE

Fp is not required to be taken as greater than

$F_p=1.6S_{DS}I_pW_p$= 1.426 Wp [ASCE 7-10 Eq 13.3-2]

and shall not be taken less than

$F_p=0.3S_{DS}I_pW_p$= 0.267 Wp [ASCE7-10 Eq 13.3-3]

Wp= 8388 lbs

$F_p$= **3745 lbs** Apply at C.G. Vessel

**Seismic Load Effect:**

$E=E_h+E_v$ [ASCE Eq 12.4-1] $E_h=\rho Q_E$ [ASCE Eq 12.4-3]

$Q_E=F_p$ [ASCE Eq 12.4-3] $E_v=0.2*S_{DS}*D$ [ASCE Eq 13.3]

$\rho$= 1.00 [ASCE Sect 13.3]

**Seismic load combinations:**

Allowable stress design per ASCE Sect 12.4.3.2

| | | | | |
|---|---|---|---|---|
| $(1.0+0.14S_{DS})D+0.7\rho Q_E$ | = 1.08*D | + 0.70*QE | | [ASCE Eq 2.4.1.5] |
| $(1.0+0.10S_{DS})D+0.525\rho Q_E+0.75L$ | = 1.06*D | + 0.53*QE | + 0.75L | [ASCE Eq 2.4.1.6] |
| $(0.6-0.14S_{DS})D+0.7\rho Q_E$ | = 0.52*D | + 0.70*QE | | [ASCE Eq 2.4.1.8] |

Strength design per ASCE Sect 12.4.2.3

| | | | | |
|---|---|---|---|---|
| $(1.2+0.2S_{DS})D+\rho Q_E+1.0L$ | = 1.32*D | + 1.00*QE | + 1.00L | [ASCE Eq 2.3.2.5] |
| $(0.9-0.2S_{DS})D+\rho Q_E$ | = 0.78*D | + 1.00*QE | | [ASCE Eq 2.3.2.7] |

Strength Design with Overstrength Factor Per ASCE Sect 12.4.3.2

| | | | | |
|---|---|---|---|---|
| $(1.2+0.2S_{DS})D+\Omega_O Q_E+1.0L+0.2S$ | = 1.32*D | + 2.50*QE | + 1.00L | + 0.20S |
| $(0.9-0.2S_{DS})D+\Omega_O Q_E$ | = 0.90*D | + 2.50*QE | | |

| | | | |
|---|---|---|---|
| client | Avantech | by SMV | sheet no. 171 |
| project | TSCR Process Enclosure | date 8/19 | |
| location | Hanford | checked | job no. |
| subject | Seismic Restraints - Ion Exchange Columns and Filter Tanks | date | 39001 |

**Discussion: The seismic restaints for the Ion Exchange Columns and the Filter Vessels have seismic loads of 3100 lbs and 1050 lbs respectively. These restraints will be analyzed separately. For the Filter Vessel, the worst case geometry with the largest "A" dimension is for WP-FLT-325A Left Restraint as shown below. All seismic restraints will have similar components except for the "A" and "B" dimensions.**

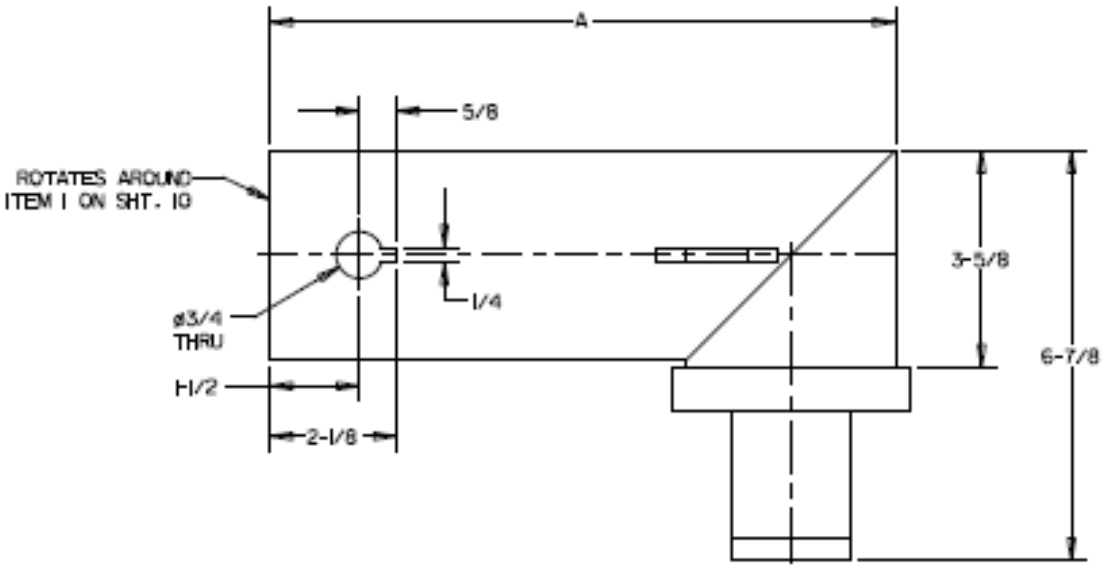


| TABLE A | | | | |
|---|---|---|---|---|
| LOCATION | A (IN) | B (IN) | C (IN) | D (IN) |
| WP-IX-400 A/B/C | 8-3/8 | 3-1/2 | 14-3/8 | 9-3/8 |
| WP-FLT-325A LEFT | 10-1/2 | 6-1/2 | 14-1/8 | 9-1/8 |
| WP-FLT-325B LEFT | 7 | 3 | 14-1/8 | 9-1/8 |
| WP-FLT-325A RIGHT | 8-1/2 | 4 | 14-1/8 | 9-1/8 |
| WP-FLT-325B RIGHT | 7 | 3 | 14-1/8 | 9-1/8 |

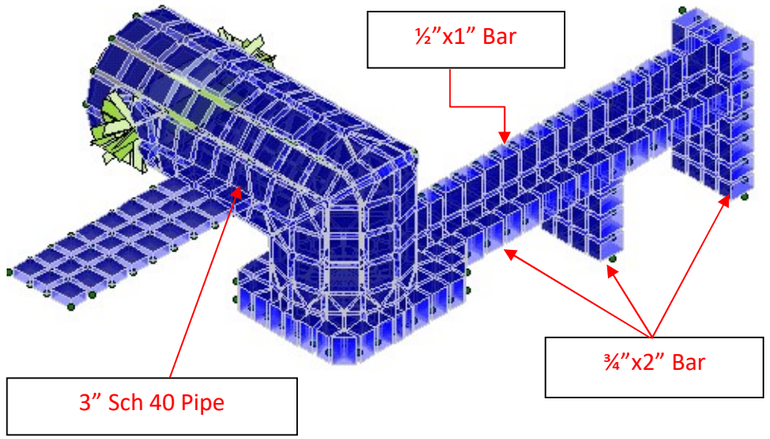


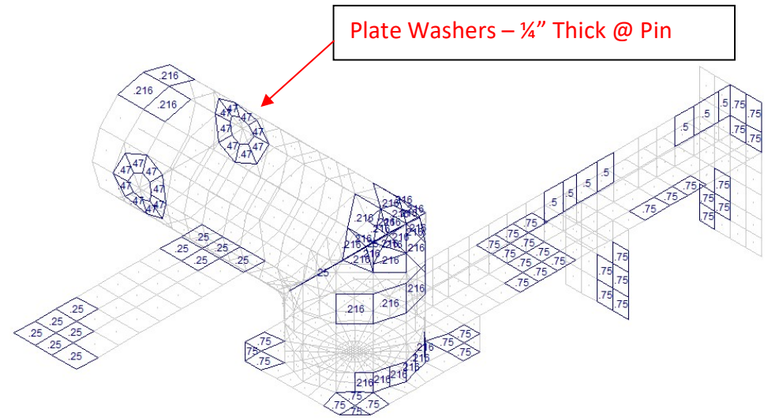


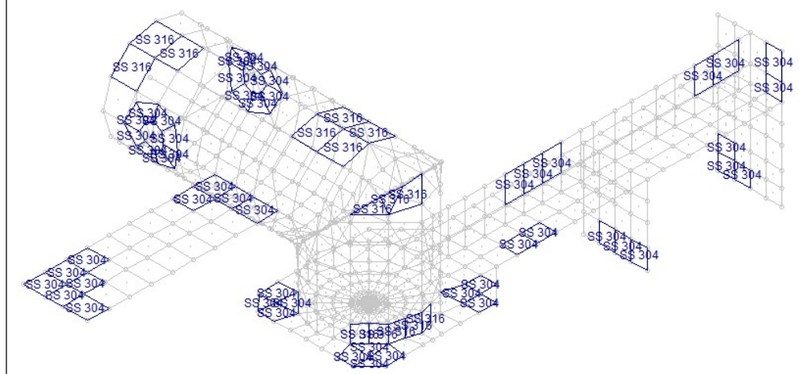

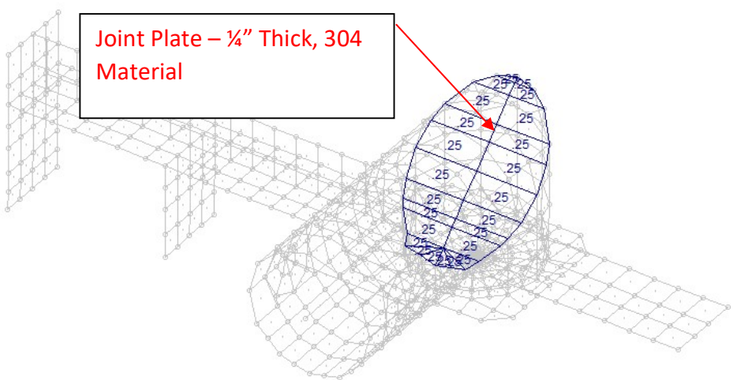


**SEISMIC LOAD (OUTWARD) AND REACTIONS**

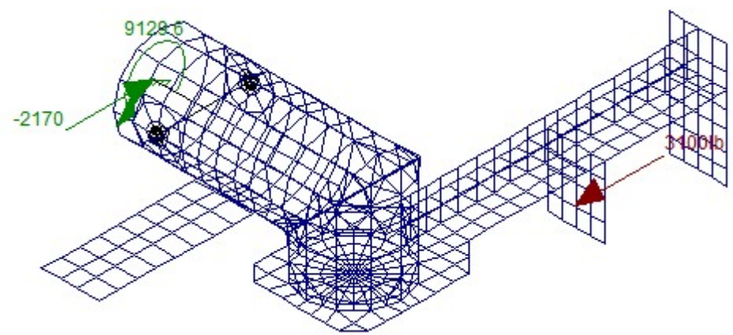


**SEISMIC LOAD (INWARD) AND REACTIONS**

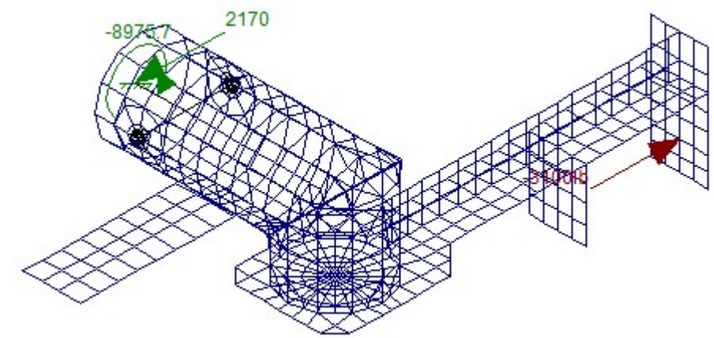


**SEISMIC LOAD (OUTWARD) AND REACTIONS**

**WP-IX-400 SEISMIC RESTRAINT**

Basic Load Cases

| | BLC Description | Category | X Gravity | Y Gravity | Z Gravity | Joint | Point | Distrib... | Area |
|---|---|---|---|---|---|---|---|---|---|
| 1 | Selfweight | None | | | -1 | | | | |
| 2 | Seismic Restraint Force Outward | None | | | | 1 | | | |
| 3 | Seismic Restraint Force Inward | None | | | | 1 | | | |

Load Combinations

Combinations | Design

| | Description | Sol... | PD... | SR... | BLC | Factor | BLC | Factor | BLC |
|---|---|---|---|---|---|---|---|---|---|
| 1 | Selfweight | ☑ | Y | | 1 | 1 | | | |
| 2 | Seismic Component Load - Outward | ☑ | Y | | 1 | 1.08 | 2 | .7 | |
| 3 | Seismic Component Load - Inward | ☑ | Y | | 1 | 1.08 | 3 | .7 | |

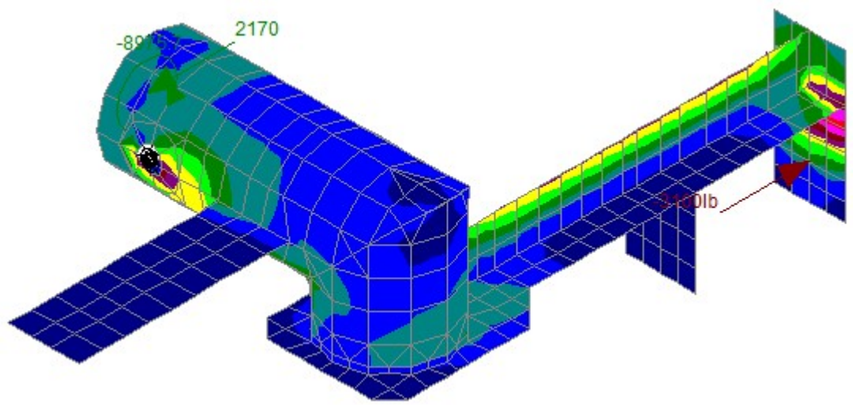


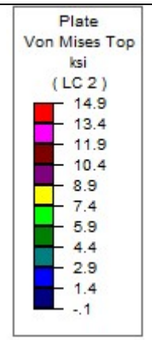


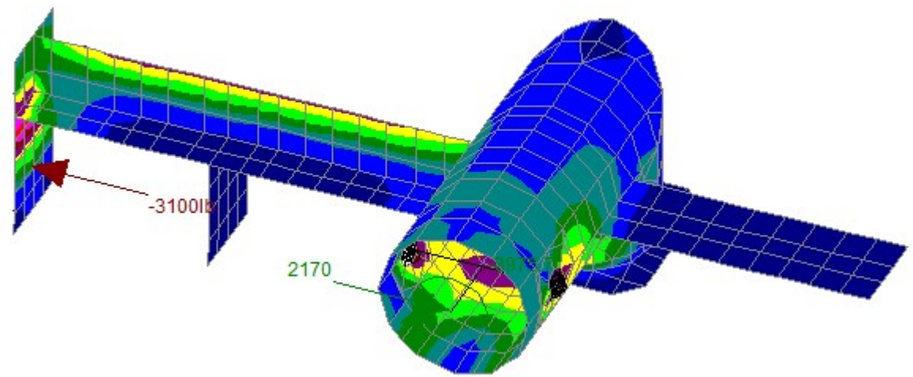


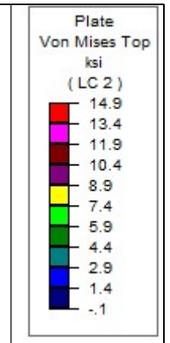


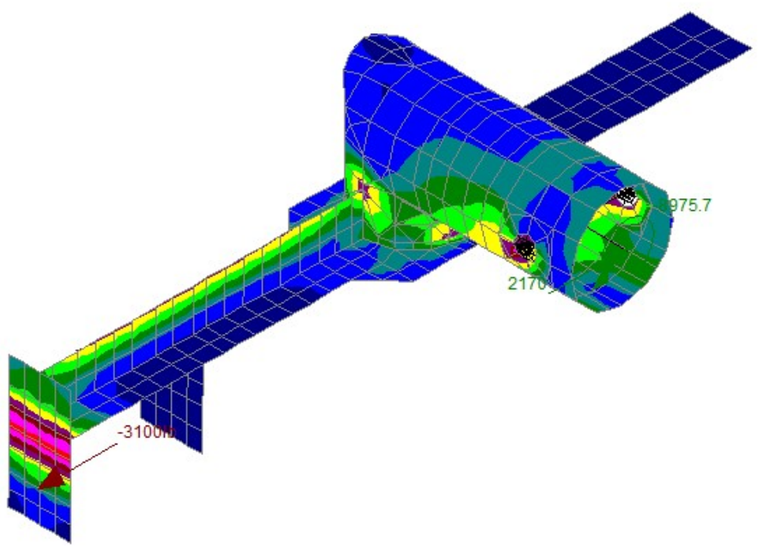


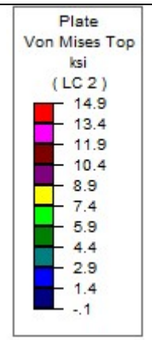


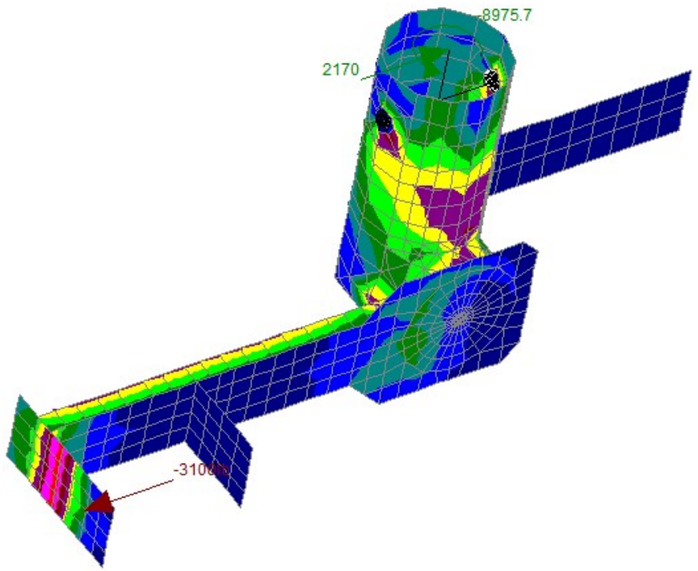


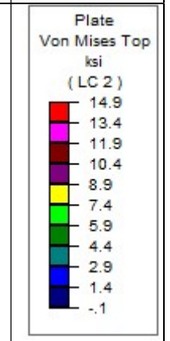


**WP-IX-400 PLATE STRESSES – OUTWARD SEISMIC RESTRAINT**

Plate Principal Stresses (By Combination)

| | L... | Plate Label | Loc | Sigma1[ksi] | Sigma2[ksi] | Tau M... | Angle[rad] | Von Mises[ksi] |
|---|---|---|---|---|---|---|---|---|
| 1 | 2 | P347 | T | -2.523 | -18.707 | 8.092 | .004 | 17.582 |
| 2 | | | B | 18.793 | 2.754 | 8.02 | 1.563 | 17.579 |
| 3 | 2 | P349 | T | -2.521 | -18.706 | 8.092 | -.004 | 17.581 |
| 4 | | | B | 18.792 | 2.752 | 8.02 | 1.578 | 17.578 |
| 5 | 2 | P348 | T | -1.581 | -17.872 | 8.146 | -.019 | 17.136 |
| 6 | | | B | 17.786 | 1.569 | 8.109 | 1.558 | 17.056 |
| 7 | 2 | P350 | T | -1.578 | -17.868 | 8.145 | .019 | 17.133 |
| 8 | | | B | 17.782 | 1.568 | 8.107 | 1.583 | 17.053 |
| 9 | 2 | P17 | T | -9.299 | -17.772 | 4.236 | .192 | 15.397 |
| 10 | | | B | 7.41 | -.939 | 4.175 | 2.18 | 7.922 |
| 11 | 2 | P601 | T | 12.099 | -1.572 | 6.835 | -.486 | 12.956 |
| 12 | | | B | 2.461 | -4.856 | 3.658 | 2.33 | 6.449 |
| 13 | 2 | P24 | T | -12.159 | -13.488 | .665 | -.093 | 12.875 |
| 14 | | | B | 7.572 | .966 | 3.303 | 1.195 | 7.138 |
| 15 | 2 | P600 | T | 8.54 | -6.036 | 7.288 | -.569 | 12.685 |
| 16 | | | B | 6.793 | -7.752 | 7.272 | -.639 | 12.605 |
| 17 | 2 | P597 | T | 8.561 | -5.533 | 7.047 | .886 | 12.299 |
| 18 | | | B | 6.957 | -6.552 | 6.755 | .95 | 11.701 |
| 19 | 2 | P643 | T | 8.337 | -5.708 | 7.022 | .796 | 12.234 |
| 20 | | | B | 4.257 | -3.631 | 3.944 | .762 | 6.838 |
| 21 | 2 | P516 | T | 3.094 | -9.786 | 6.44 | 1.996 | 11.646 |
| 22 | | | B | -1.164 | -11.011 | 4.923 | 1.999 | 10.477 |
| 23 | 2 | P519 | T | 8.325 | -4.918 | 6.621 | 2.236 | 11.594 |
| 24 | | | B | -6.95 | -8.486 | .768 | .772 | 7.832 |
| 25 | 2 | P517 | T | 6.691 | -6.571 | 6.631 | .173 | 11.485 |
| 26 | | | B | -1.761 | -11.024 | 4.631 | -.763 | 10.257 |
| 27 | 2 | P353 | T | -.287 | -11.594 | 5.654 | .011 | 11.453 |
| 28 | | | B | 11.657 | .254 | 5.701 | 1.579 | 11.532 |
| 29 | 2 | P351 | T | -.287 | -11.594 | 5.653 | -.011 | 11.453 |
| 30 | | | B | 11.656 | .254 | 5.701 | 1.563 | 11.531 |
| 31 | 2 | P639 | T | 8.844 | -4.081 | 6.463 | .821 | 11.445 |
| 32 | | | B | 2.89 | -3.841 | 3.365 | .609 | 5.848 |
| 33 | 2 | P354 | T | -.006 | -11.324 | 5.659 | -.009 | 11.321 |
| 34 | | | B | 11.264 | -.02 | 5.642 | 1.556 | 11.274 |
| 35 | 2 | P352 | T | -.006 | -11.321 | 5.658 | .01 | 11.319 |
| 36 | | | B | 11.262 | -.02 | 5.641 | 1.585 | 11.272 |
| 37 | 2 | P640 | T | 10.069 | -1.222 | 5.645 | -.655 | 10.732 |
| 38 | | | B | 3.077 | -3.465 | 3.271 | 2.145 | 5.669 |
| 39 | 2 | P644 | T | 9.285 | -2.372 | 5.828 | 2.346 | 10.67 |

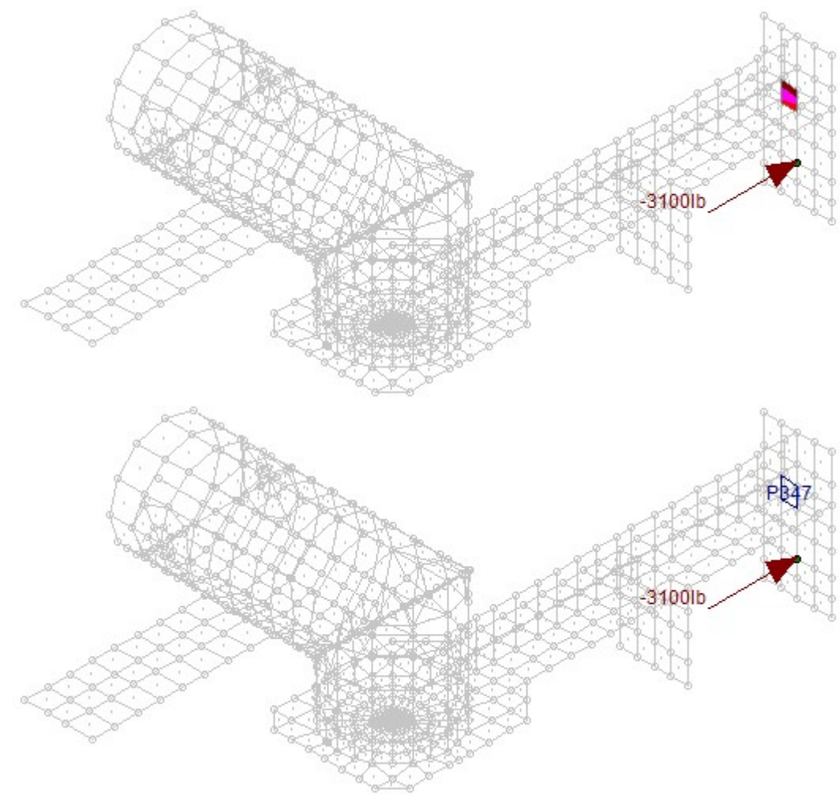


**WP-IX-400 PLATE STRESSES – OUTWARD SEISMIC RESTRAINT**

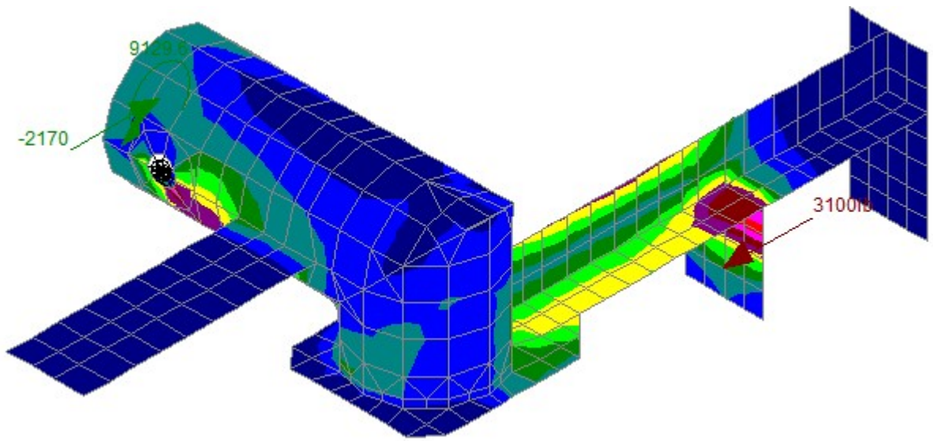


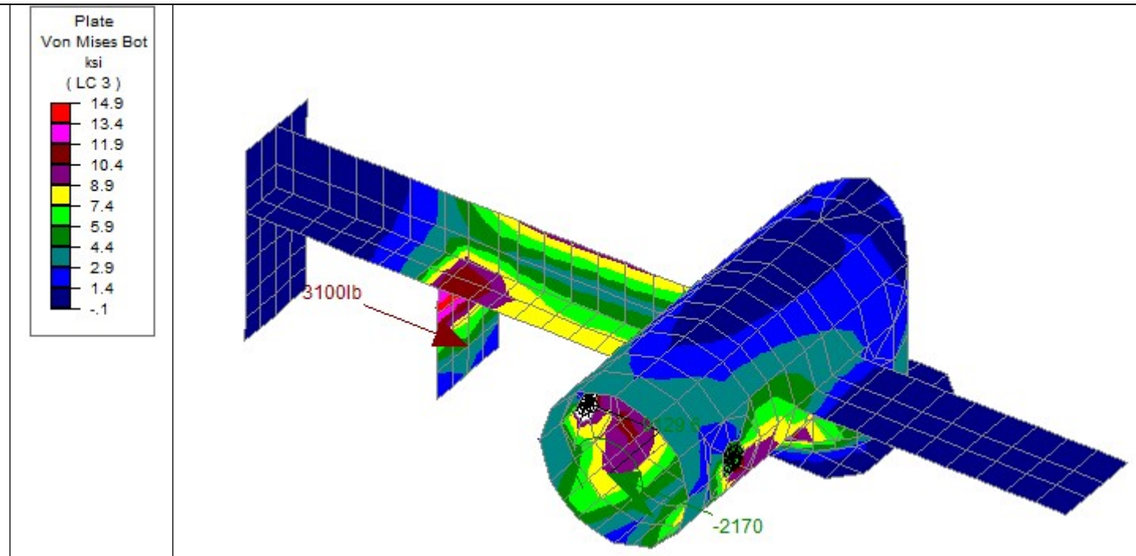


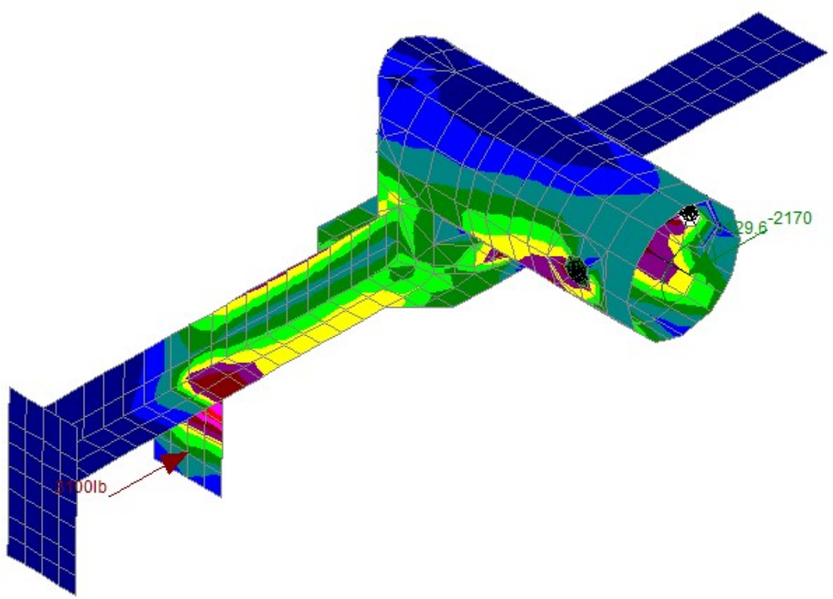


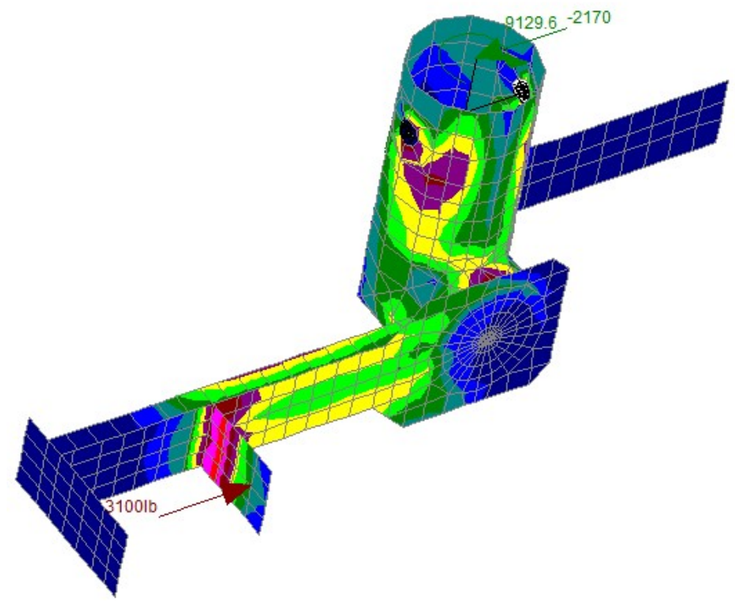


Plate
Von Mises Bot
ksi
( LC 3 )

14.9
13.4
11.9
10.4
8.9
7.4
5.9
4.4
2.9
1.4
-.1

**WP-IX-400 PLATE STRESSES – INWARD SEISMIC RESTRAINT**

Plate Principal Stresses (By Combination)

| | L... | Plate Label | Loc | Sigma1[ksi] | Sigma2[ksi] | Tau M... | Angle[rad] | Von Mises[ksi] |
|---|---|---|---|---|---|---|---|---|
| 1 | 3 | P361 | T | 18.556 | 2.99 | 7.783 | 1.577 | 17.257 |
| 2 | | | B | -2.598 | -18.761 | 8.082 | -.003 | 17.606 |
| 3 | 3 | P359 | T | 18.561 | 3.011 | 7.775 | 1.564 | 17.254 |
| 4 | | | B | -2.614 | -18.765 | 8.075 | .001 | 17.604 |
| 5 | 3 | P360 | T | 18.035 | 1.572 | 8.232 | 1.537 | 17.303 |
| 6 | | | B | -1.195 | -17.812 | 8.309 | -.015 | 17.246 |
| 7 | 3 | P362 | T | 18.031 | 1.56 | 8.236 | 1.603 | 17.304 |
| 8 | | | B | -1.193 | -17.81 | 8.308 | .014 | 17.244 |
| 9 | 3 | P66 | T | 3.973 | 1.186 | 1.393 | .733 | 3.532 |
| 10 | | | B | -5.758 | -14.853 | 4.548 | .029 | 12.971 |
| 11 | 3 | P600 | T | 6.084 | -8.669 | 7.376 | 1.002 | 12.841 |
| 12 | | | B | 7.838 | -6.865 | 7.351 | .933 | 12.742 |
| 13 | 3 | P109 | T | 7.764 | -3.175 | 5.469 | 2.21 | 9.747 |
| 14 | | | B | 2.248 | -11.255 | 6.751 | -.572 | 12.53 |
| 15 | 3 | P310 | T | 7.766 | 1.452 | 3.157 | .146 | 7.152 |
| 16 | | | B | -1.914 | -13.287 | 5.686 | 1.577 | 12.441 |
| 17 | 3 | P309 | T | 7.782 | 1.458 | 3.162 | -.143 | 7.165 |
| 18 | | | B | -1.91 | -13.263 | 5.677 | 1.564 | 12.419 |
| 19 | 3 | P285 | T | 3.909 | -6.803 | 5.356 | -.73 | 9.388 |
| 20 | | | B | 7.634 | -6.657 | 7.146 | -.774 | 12.386 |
| 21 | 3 | P284 | T | 5.655 | -5.063 | 5.359 | 2.354 | 9.287 |
| 22 | | | B | 5.072 | -8.949 | 7.011 | -.756 | 12.297 |
| 23 | 3 | P668 | T | 5.174 | -2.675 | 3.925 | .76 | 6.912 |
| 24 | | | B | 5.474 | -8.347 | 6.911 | .741 | 12.055 |
| 25 | 3 | P627 | T | 6.282 | -4.292 | 5.287 | -.577 | 9.211 |
| 26 | | | B | -.618 | -12.268 | 5.825 | 2.34 | 11.971 |
| 27 | 3 | P337 | T | 7.967 | 1.214 | 3.377 | .163 | 7.435 |
| 28 | | | B | -1.599 | -12.667 | 5.534 | 1.623 | 11.948 |
| 29 | 3 | P308 | T | 8.024 | 1.22 | 3.402 | -.161 | 7.489 |
| 30 | | | B | -1.594 | -12.589 | 5.497 | 1.519 | 11.872 |
| 31 | 3 | P597 | T | 5.598 | -8.66 | 7.129 | -.686 | 12.442 |
| 32 | | | B | 6.597 | -7.068 | 6.833 | -.622 | 11.837 |
| 33 | 3 | P506 | T | -7.083 | -8.652 | .784 | .742 | 7.984 |
| 34 | | | B | 8.449 | -4.952 | 6.7 | 2.227 | 11.736 |
| 35 | 3 | P503 | T | -1.195 | -11.181 | 4.993 | 2.003 | 10.634 |
| 36 | | | B | 3.088 | -9.872 | 6.48 | 1.989 | 11.725 |
| 37 | 3 | P632 | T | 4.332 | -6.216 | 5.274 | 2.157 | 9.183 |
| 38 | | | B | 11.947 | .588 | 5.68 | -.778 | 11.664 |
| 39 | 3 | P110 | T | 9.065 | -1.11 | 5.087 | 2.202 | 9.668 |

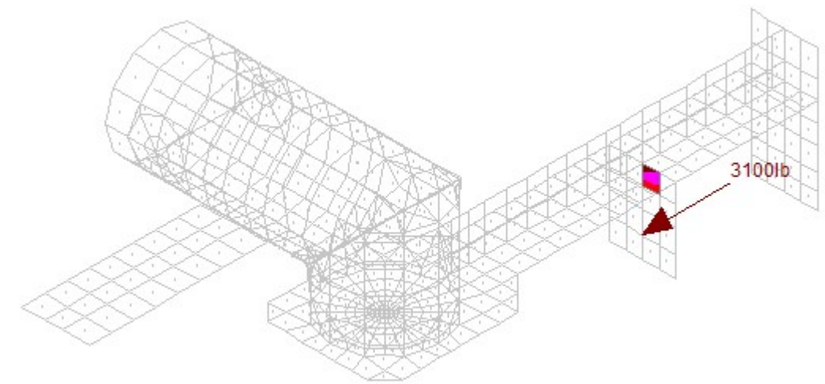


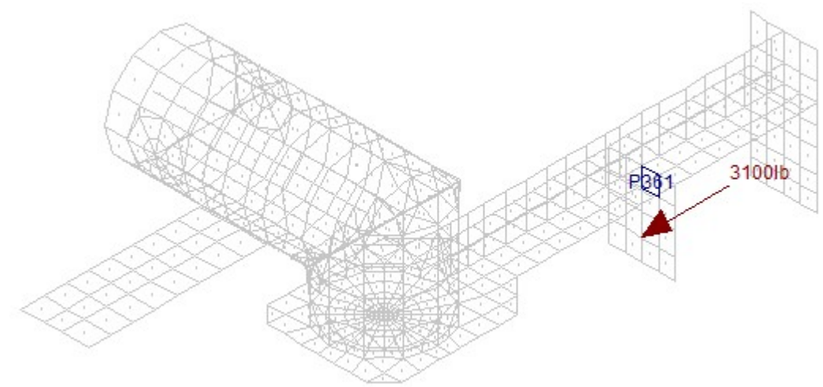


**WP-IX-400 PLATE STRESSES – INWARD SEISMIC RESTRAINT**

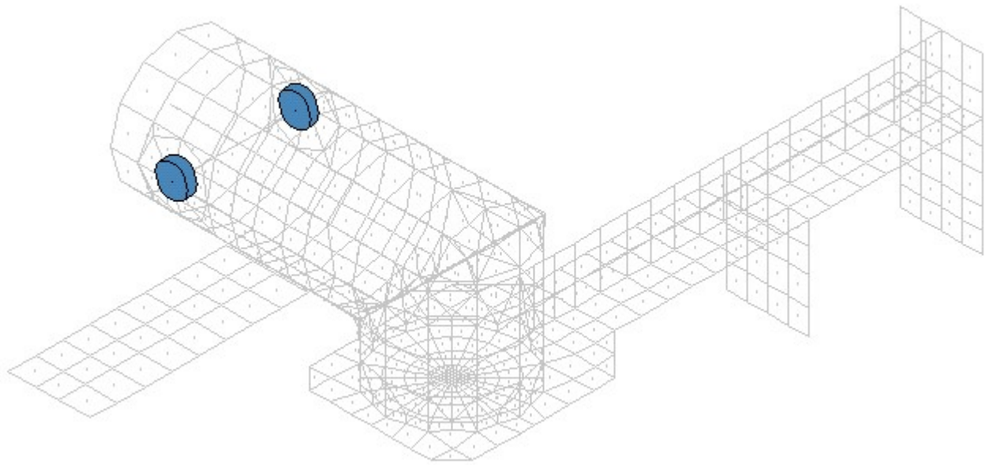

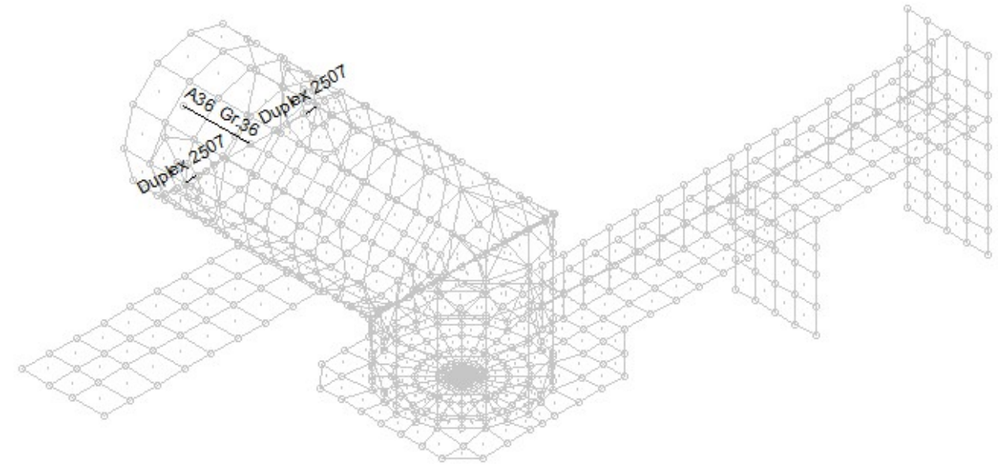


Stainless Steel Properties

Hot Rolled | Cold Formed | Wood | Concrete | Masonry | Aluminum | Stainless | General

| | Label | E [ksi] | G [ksi] | Nu | Therm ... | Densit... | n | Yield[k... | Fu[ksi] |
|---|---|---|---|---|---|---|---|---|---|
| 1 | A276 S316 | 28000 | 10780 | .3 | .93 | .5 | 5.6 | 30 | 75 |
| 2 | A276 S321 | 29000 | 11165 | .3 | .73 | .48 | 5.6 | 65 | 94 |
| 3 | A276 S304 | 28000 | 10780 | .3 | .93 | .49 | 5.6 | 30 | 75 |
| 4 | A564 17-4 | 28000 | 10780 | .3 | .93 | .5 | 5.6 | 145 | 155 |
| 5 | Duplex 2507 | 28000 | 10780 | .3 | .93 | .5 | 5.6 | 80 | 116 |

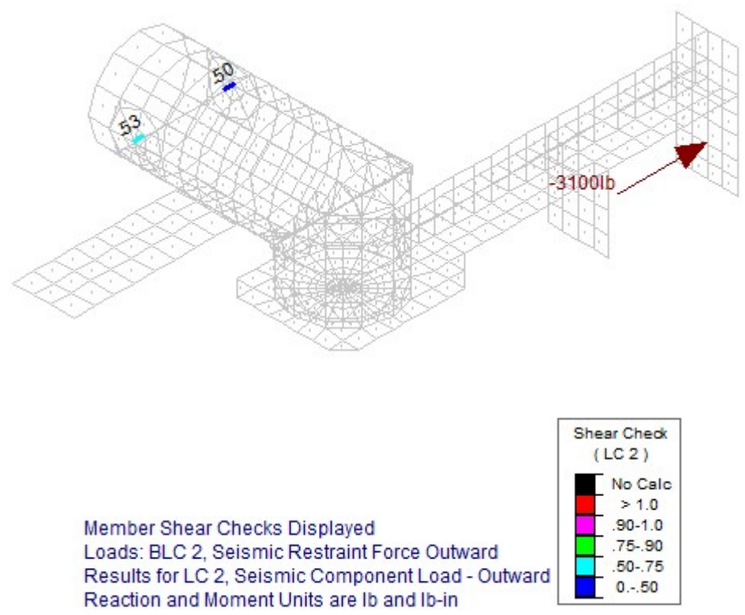


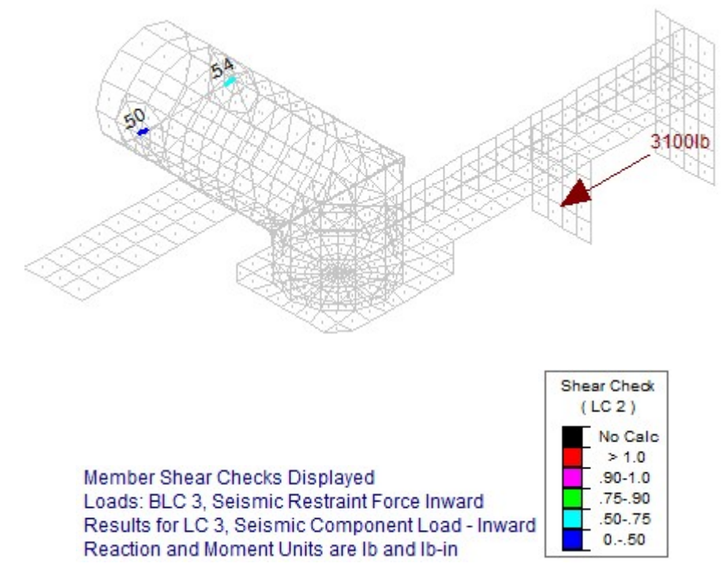


**WP-IX-400 SEISMIC RESTRAINT PIN SHEAR CHECK**

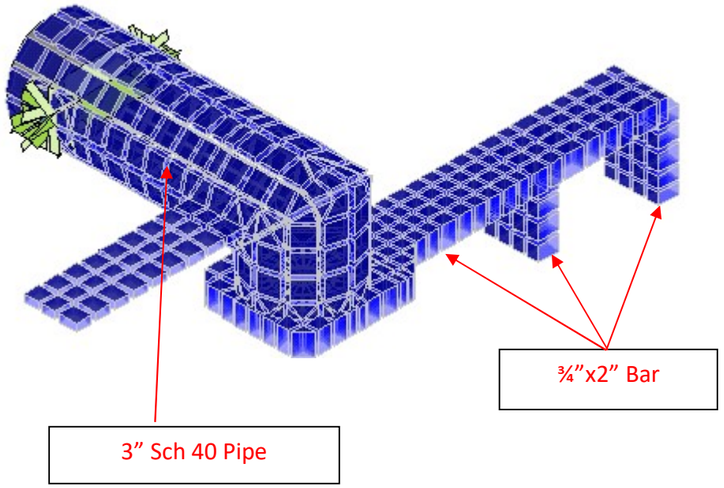


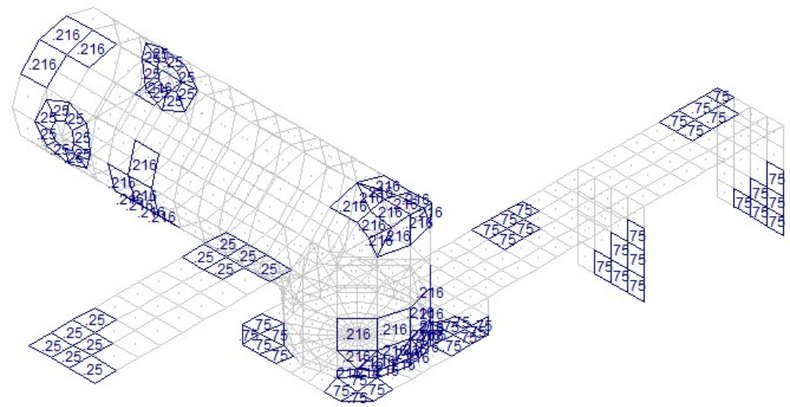

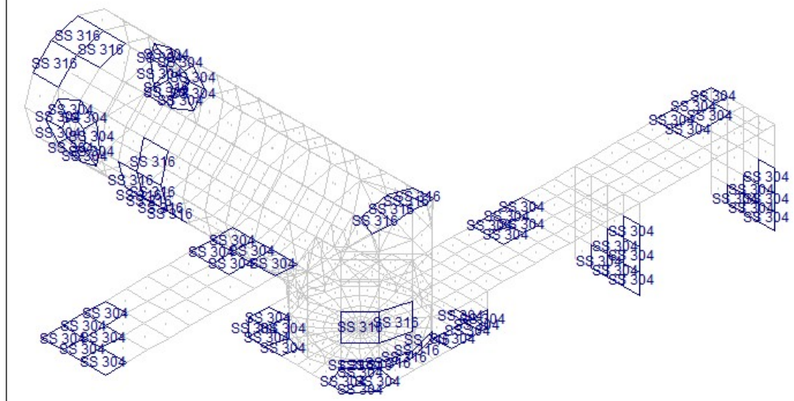

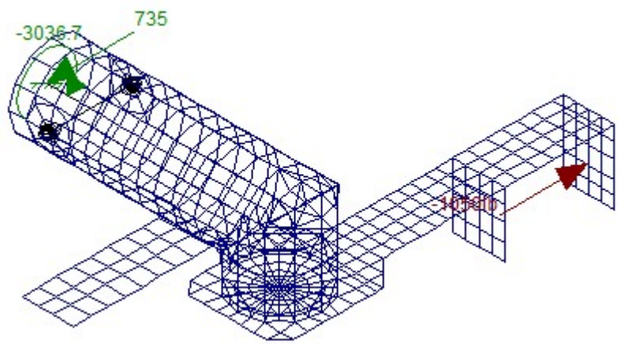


**SEISMIC LOAD (OUTWARD) AND REACTIONS**

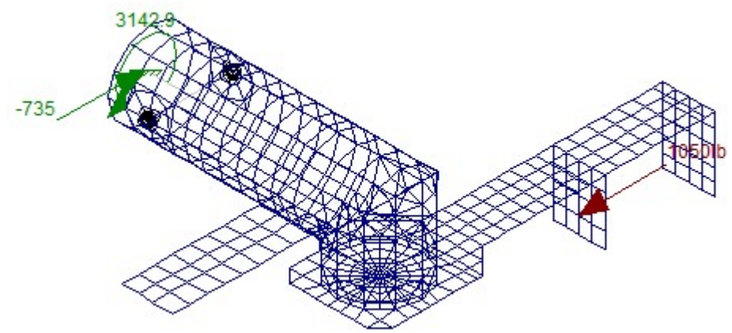


**SEISMIC LOAD (INWARD) AND REACTIONS**

Basic Load Cases

| | BLC Description | Category | X Gravity | Y Gravity | Z Gravity | Joint | Point | Distrib... | Area(Memb... | Surface(Plate/Wa |
|---|---|---|---|---|---|---|---|---|---|---|
| 1 | Selfweight | None | | | -1 | | | | | |
| 2 | Seismic Restraint Force Outward | None | | | | 1 | | | | |
| 3 | Seismic Restraint Force Inward | None | | | | 1 | | | | |

Load Combinations

Combinations | Design

| | Description | Solve | PDelta | SRSS | BLC | Factor | BLC | Factor | BLC | Factor | BLC | Factor |
|---|---|---|---|---|---|---|---|---|---|---|---|---|
| 1 | Selfweight | ☑ | Y | | 1 | 1 | | | | | | |
| 2 | Seismic Component Load - Outward | ☑ | Y | | 1 | 1.08 | 2 | .7 | | | | |
| 3 | Seismic Component Load - Inward | ☑ | Y | | 1 | 1.08 | 3 | .7 | | | | |

**WP-FLT-325A LEFT SEISMIC RESTRAINT**

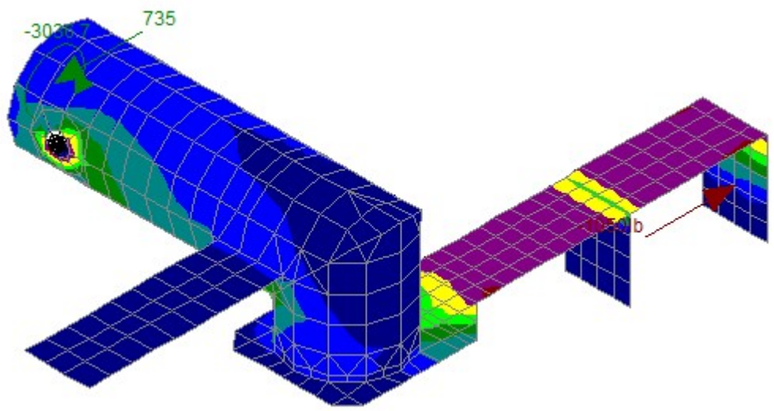


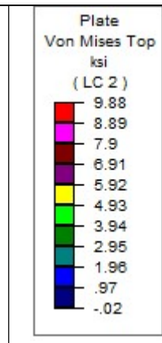


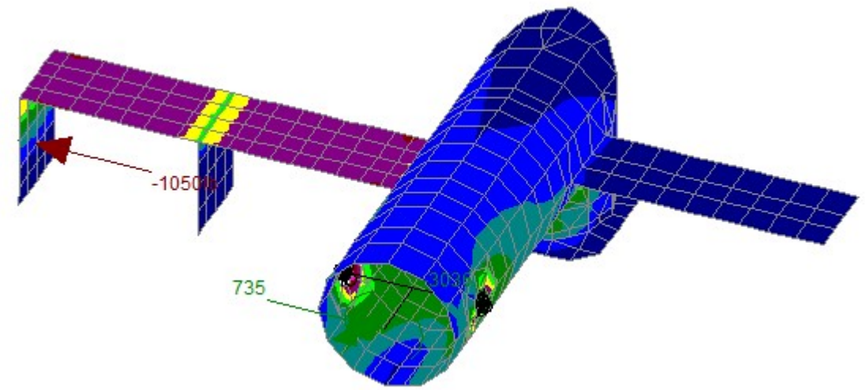


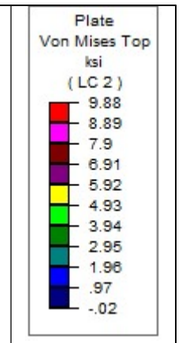


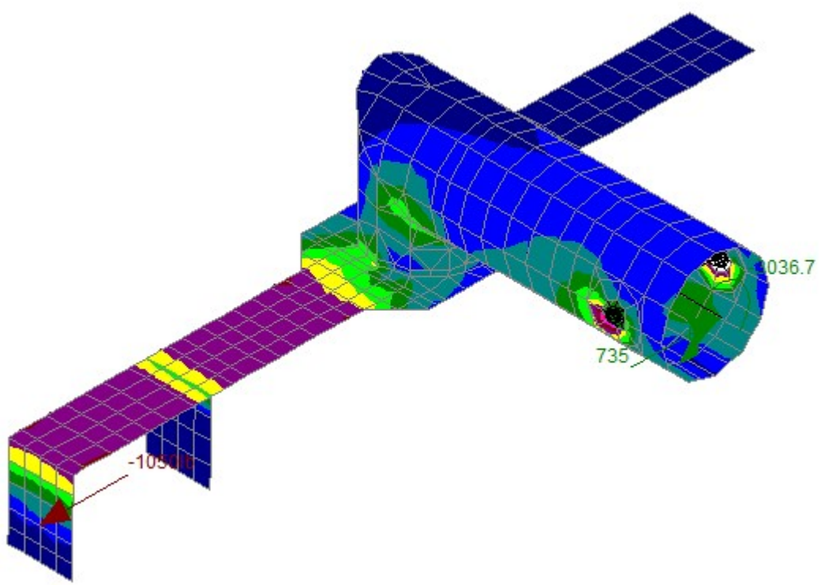


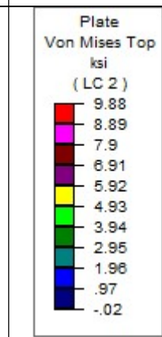


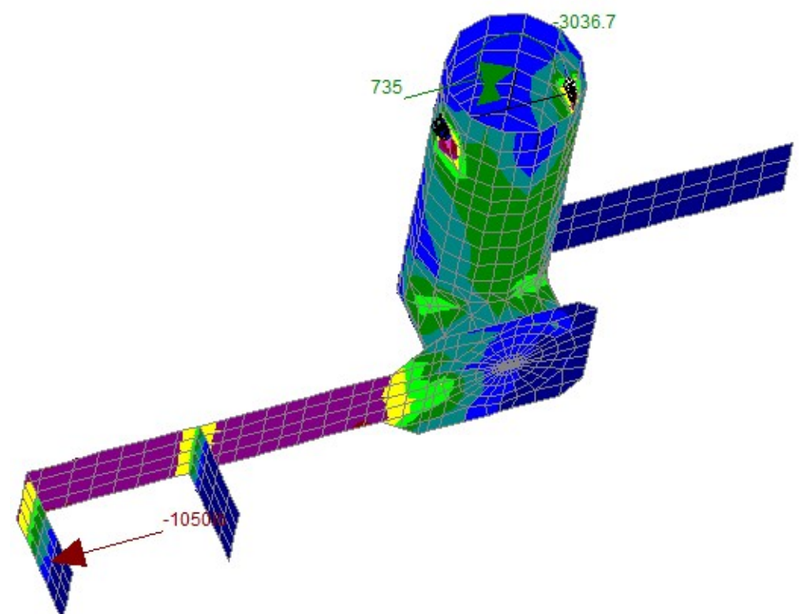


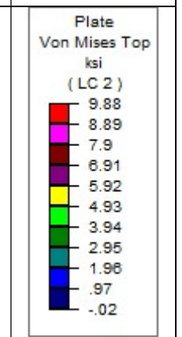


**WP-FLT-325A LEFT PLATE STRESSES – OUTWARD SEISMIC RESTRAINT FORCE**

Plate Principal Stresses (By Combination)

| | L... | Plate Label | Loc | Sigma1[ksi] | Sigma2[ksi] | Tau M... | Angle[rad] | Von Mises[ksi] |
|---|---|---|---|---|---|---|---|---|
| 1 | 2 | P475 | T | 4.043 | -5.417 | 4.73 | .259 | 8.221 |
| 2 | | | B | -2.293 | -4.938 | 1.322 | 1.623 | 4.28 |
| 3 | 2 | P473 | T | 3.179 | -5.959 | 4.569 | 2.119 | 8.034 |
| 4 | | | B | -1.412 | -6.057 | 2.322 | 1.2 | 5.488 |
| 5 | 2 | P323 | T | -.438 | -7.401 | 3.481 | 1.673 | 7.192 |
| 6 | | | B | 8.518 | .578 | 3.97 | .113 | 8.244 |
| 7 | 2 | P542 | T | 7.582 | .998 | 3.292 | -.443 | 7.136 |
| 8 | | | B | -1.841 | -4.109 | 1.134 | 2.286 | 3.565 |
| 9 | 2 | P340 | T | -.307 | -7.068 | 3.38 | 1.492 | 6.919 |
| 10 | | | B | 8.235 | .455 | 3.89 | -.093 | 8.018 |
| 11 | 2 | P293 | T | -.171 | -6.98 | 3.404 | 1.531 | 6.896 |
| 12 | | | B | 7.748 | .157 | 3.795 | -.014 | 7.67 |
| 13 | 2 | P330 | T | -.171 | -6.976 | 3.403 | 1.61 | 6.892 |
| 14 | | | B | 7.76 | .157 | 3.801 | .014 | 7.683 |
| 15 | 2 | P472 | T | 2.087 | -5.583 | 3.835 | 1.939 | 6.869 |
| 16 | | | B | -.072 | -2.66 | 1.294 | 2.135 | 2.625 |
| 17 | 2 | P296 | T | -.056 | -6.874 | 3.409 | 1.561 | 6.846 |
| 18 | | | B | 7.806 | .027 | 3.889 | -.002 | 7.792 |
| 19 | 2 | P331 | T | -.056 | -6.867 | 3.405 | 1.581 | 6.839 |
| 20 | | | B | 7.814 | .027 | 3.894 | .002 | 7.801 |
| 21 | 2 | P299 | T | -.029 | -6.843 | 3.407 | 1.57 | 6.828 |
| 22 | | | B | 7.813 | .018 | 3.898 | 0 | 7.804 |
| 23 | 2 | P302 | T | -.031 | -6.841 | 3.405 | 1.575 | 6.826 |
| 24 | | | B | 7.804 | .028 | 3.888 | .002 | 7.79 |
| 25 | 2 | P329 | T | -.217 | -6.929 | 3.356 | 1.615 | 6.823 |
| 26 | | | B | 7.493 | .453 | 3.52 | .027 | 7.278 |
| 27 | 2 | P290 | T | -.218 | -6.93 | 3.356 | 1.526 | 6.823 |
| 28 | | | B | 7.476 | .452 | 3.512 | -.027 | 7.261 |
| 29 | 2 | P332 | T | -.029 | -6.835 | 3.403 | 1.571 | 6.82 |
| 30 | | | B | 7.821 | .018 | 3.902 | 0 | 7.812 |
| 31 | 2 | P333 | T | -.031 | -6.833 | 3.401 | 1.566 | 6.817 |
| 32 | | | B | 7.812 | .028 | 3.892 | -.002 | 7.798 |
| 33 | 2 | P300 | T | -.08 | -6.843 | 3.381 | 1.57 | 6.803 |
| 34 | | | B | 7.822 | .045 | 3.889 | 0 | 7.8 |
| 35 | 2 | P372 | T | -.111 | -6.856 | 3.373 | 1.59 | 6.802 |
| 36 | | | B | 7.807 | .119 | 3.844 | .016 | 7.748 |
| 37 | 2 | P308 | T | -.115 | -6.858 | 3.372 | 1.549 | 6.801 |
| 38 | | | B | 7.778 | .107 | 3.836 | -.017 | 7.726 |
| 39 | 2 | P301 | T | -.08 | -6.84 | 3.38 | 1.571 | 6.8 |

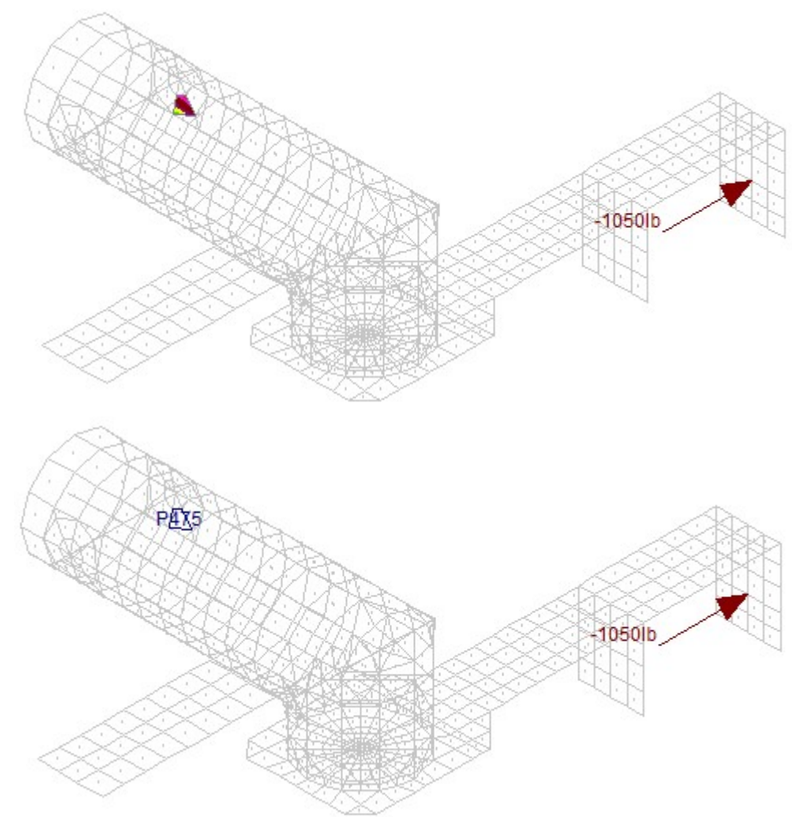


**WP-FLT-325A LEFT PLATE STRESSES – OUTWARD SEISMIC RESTRAINT FORCE**

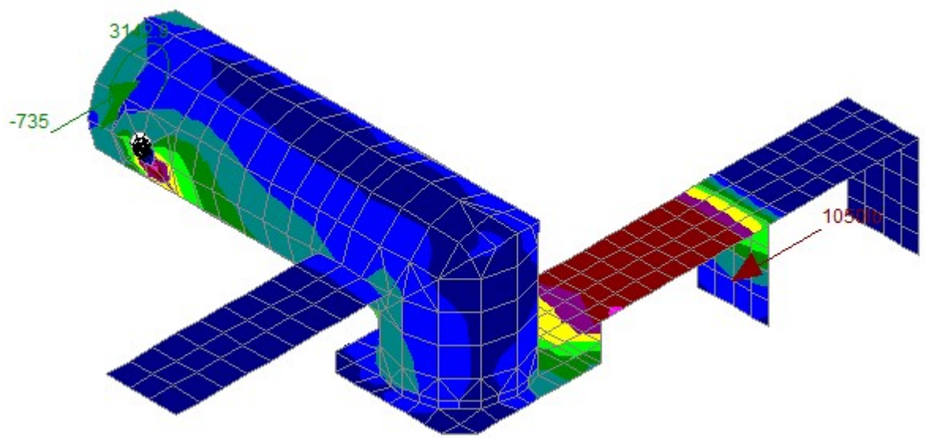


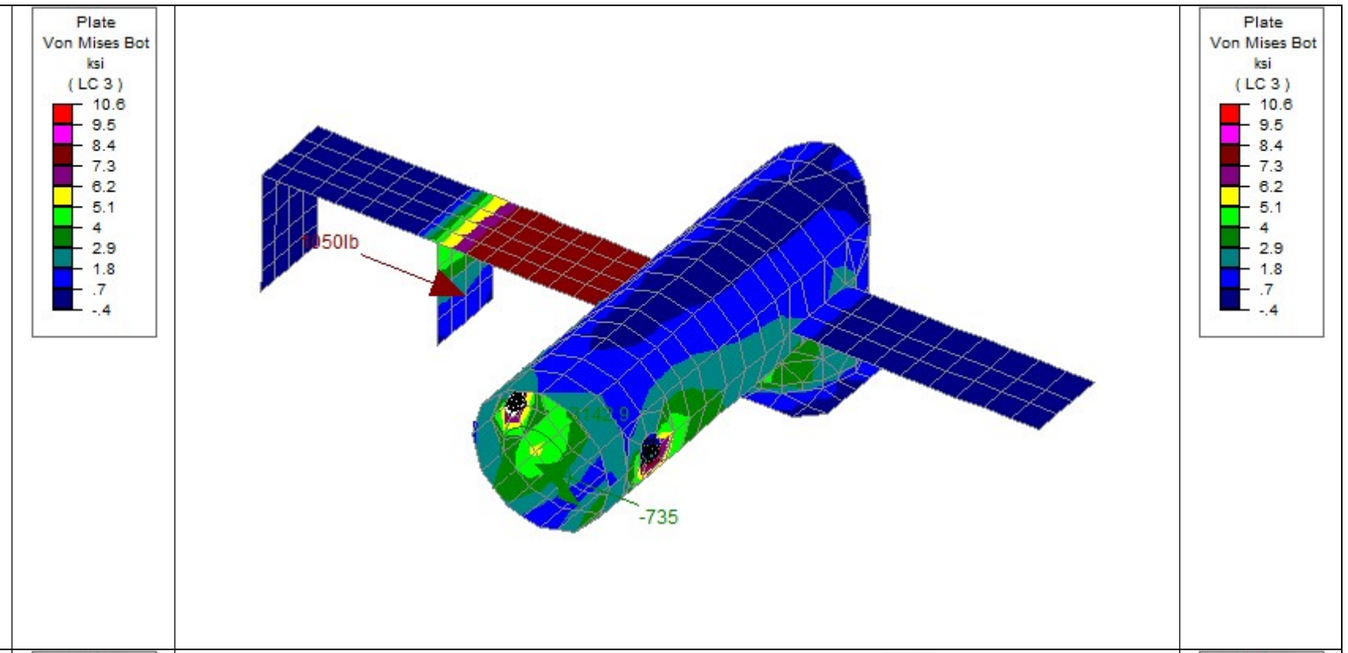


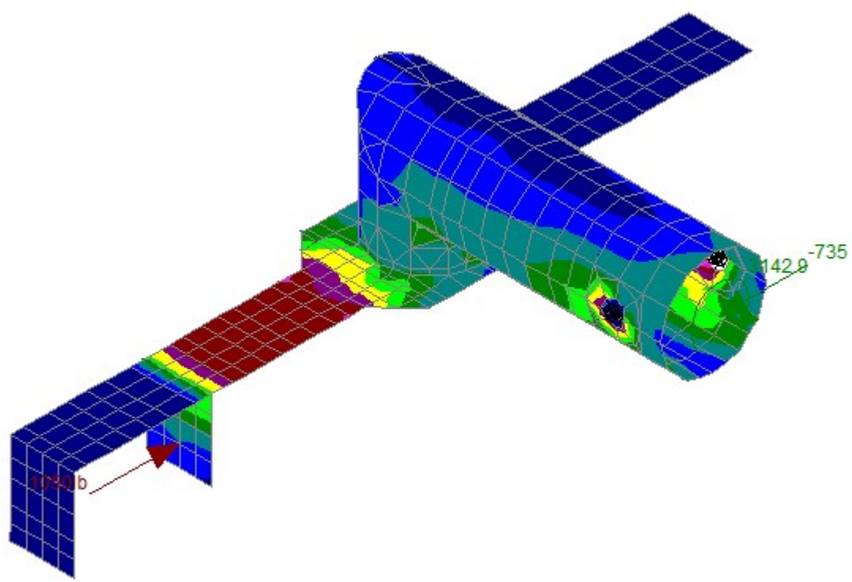


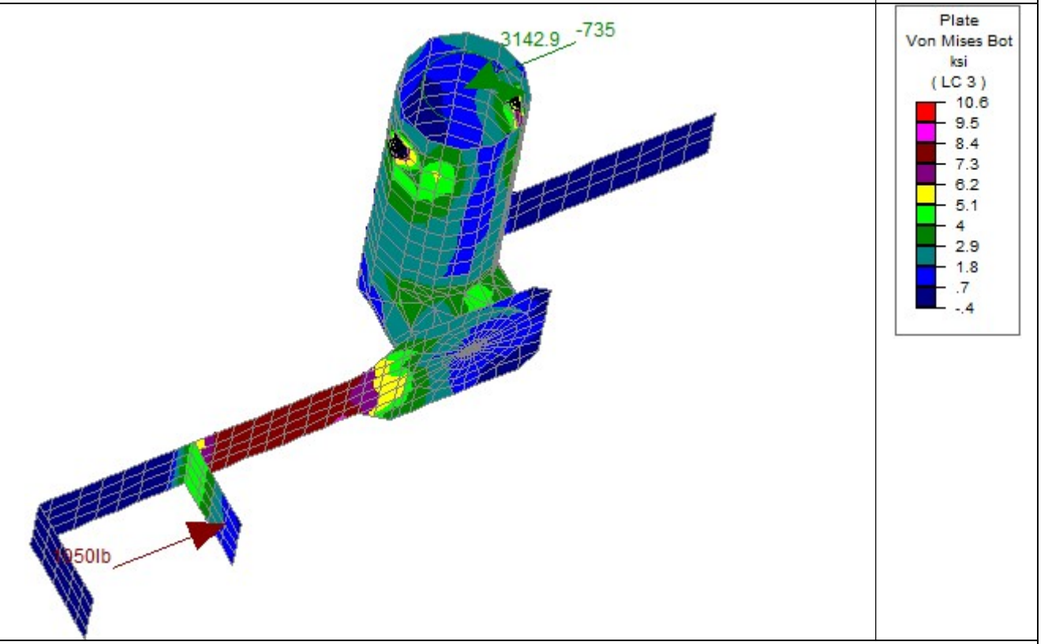


**WP-FLT-325A LEFT PLATE STRESSES – INWARD SEISMIC RESTRAINT FORCE**

Plate Principal Stresses (By Combination)

| | L... | Plate Label | Loc | Sigma1[ksi] | Sigma2[ksi] | Tau M... | Angle[rad] | Von Mises[ksi] |
|---|---|---|---|---|---|---|---|---|
| 1 | 3 | P323 | T | 7.812 | .464 | 3.674 | .102 | 7.59 |
| 2 | | | B | -.605 | -8.929 | 4.162 | 1.683 | 8.642 |
| 3 | 3 | P340 | T | 7.46 | .323 | 3.568 | -.078 | 7.304 |
| 4 | | | B | -.472 | -8.628 | 4.078 | 1.48 | 8.402 |
| 5 | 3 | P462 | T | -2.299 | -5.089 | 1.395 | 1.632 | 4.414 |
| 6 | | | B | 4.123 | -5.488 | 4.806 | .251 | 8.351 |
| 7 | 3 | P460 | T | -1.457 | -6.189 | 2.366 | 1.198 | 5.605 |
| 8 | | | B | 3.221 | -6.06 | 4.641 | 2.114 | 8.163 |
| 9 | 3 | P320 | T | 7.152 | .023 | 3.564 | .018 | 7.14 |
| 10 | | | B | -.051 | -8.137 | 4.043 | 1.593 | 8.111 |
| 11 | 3 | P339 | T | 7.036 | .017 | 3.51 | -.012 | 7.028 |
| 12 | | | B | -.046 | -8.075 | 4.015 | 1.554 | 8.052 |
| 13 | 3 | P337 | T | 6.977 | .011 | 3.483 | 0 | 6.971 |
| 14 | | | B | -.012 | -7.979 | 3.984 | 1.571 | 7.973 |
| 15 | 3 | P338 | T | 6.982 | .018 | 3.482 | -.002 | 6.972 |
| 16 | | | B | -.03 | -7.986 | 3.978 | 1.569 | 7.972 |
| 17 | 3 | P317 | T | 7.033 | .022 | 3.506 | .003 | 7.022 |
| 18 | | | B | -.033 | -7.985 | 3.976 | 1.574 | 7.968 |
| 19 | 3 | P316 | T | 6.987 | .029 | 3.479 | 0 | 6.972 |
| 20 | | | B | -.032 | -7.98 | 3.974 | 1.571 | 7.964 |
| 21 | 3 | P669 | T | 6.963 | .014 | 3.474 | .001 | 6.956 |
| 22 | | | B | -.012 | -7.969 | 3.979 | 1.572 | 7.963 |
| 23 | 3 | P315 | T | 6.998 | .03 | 3.484 | 0 | 6.983 |
| 24 | | | B | -.032 | -7.973 | 3.971 | 1.571 | 7.957 |
| 25 | 3 | P318 | T | 7.026 | .051 | 3.487 | .003 | 7 |
| 26 | | | B | -.084 | -7.999 | 3.957 | 1.574 | 7.957 |
| 27 | 3 | P319 | T | 7.004 | .051 | 3.477 | 0 | 6.979 |
| 28 | | | B | -.084 | -7.995 | 3.956 | 1.569 | 7.954 |
| 29 | 3 | P314 | T | 7.008 | .011 | 3.499 | 0 | 7.003 |
| 30 | | | B | -.011 | -7.958 | 3.973 | 1.571 | 7.952 |
| 31 | 3 | P667 | T | 6.971 | .038 | 3.467 | .001 | 6.952 |
| 32 | | | B | -.031 | -7.961 | 3.965 | 1.572 | 7.945 |
| 33 | 3 | P668 | T | 6.951 | .027 | 3.462 | .004 | 6.937 |
| 34 | | | B | -.021 | -7.955 | 3.967 | 1.574 | 7.945 |
| 35 | 3 | P663 | T | 6.991 | .014 | 3.488 | -.001 | 6.984 |
| 36 | | | B | -.012 | -7.943 | 3.966 | 1.569 | 7.937 |
| 37 | 3 | P665 | T | 6.981 | .038 | 3.471 | 0 | 6.962 |
| 38 | | | B | -.032 | -7.952 | 3.96 | 1.57 | 7.936 |
| 39 | 3 | P666 | T | 6.956 | .078 | 3.439 | .003 | 6.917 |

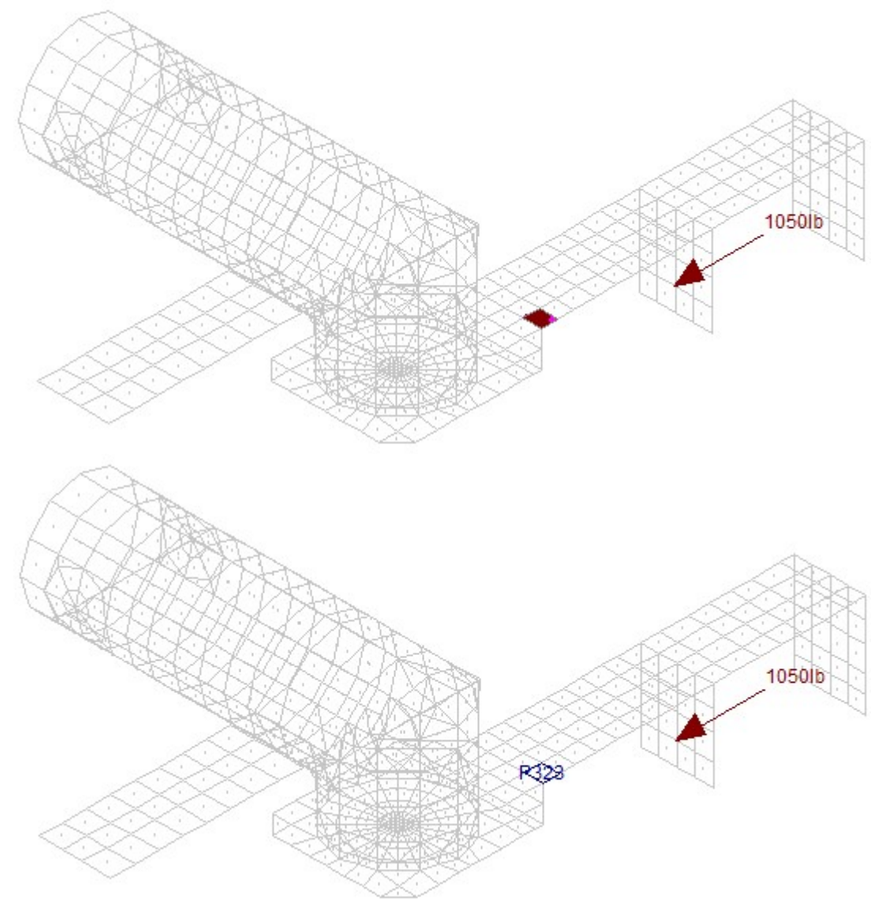


x

**WP-FLT-325A LEFT PLATE STRESSES – INWARD SEISMIC RESTRAINT FORCE**

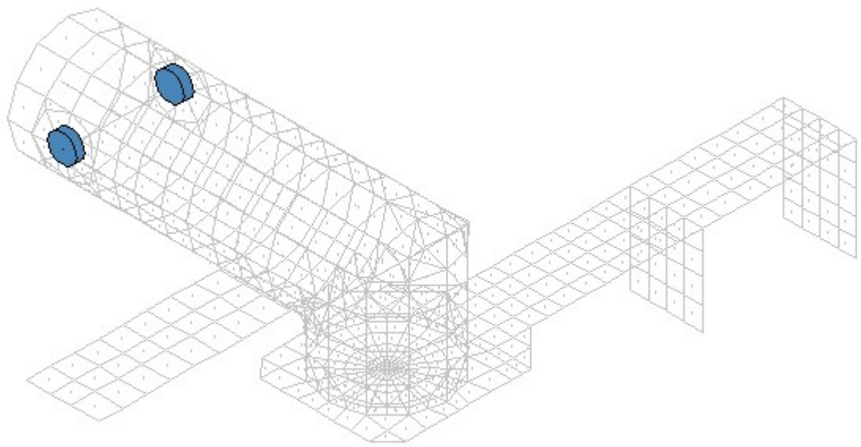

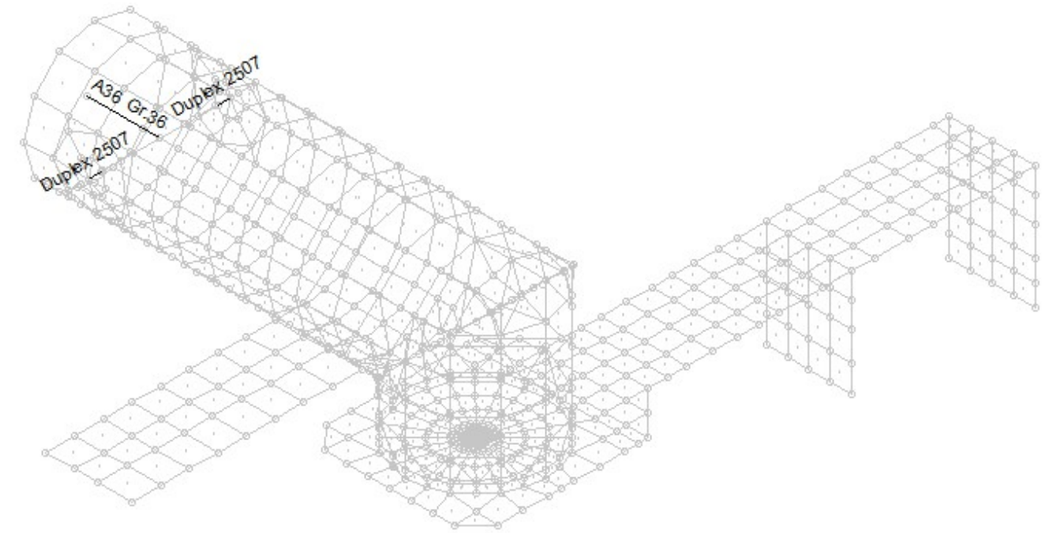


Stainless Steel Properties

Hot Rolled | Cold Formed | Wood | Concrete | Masonry | Aluminum | Stainless | General

| | Label | E [ksi] | G [ksi] | Nu | Therm ... | Densit... | n | Yield[k... | Fu[ksi] |
|---|---|---|---|---|---|---|---|---|---|
| 1 | A276 S316 | 28000 | 10780 | .3 | .93 | .5 | 5.6 | 30 | 75 |
| 2 | A276 S321 | 29000 | 11165 | .3 | .73 | .48 | 5.6 | 65 | 94 |
| 3 | A276 S304 | 28000 | 10780 | .3 | .93 | .49 | 5.6 | 30 | 75 |
| 4 | A564 17-4 | 28000 | 10780 | .3 | .93 | .5 | 5.6 | 145 | 155 |
| 5 | Duplex 2507 | 28000 | 10780 | .3 | .93 | .5 | 5.6 | 80 | 116 |

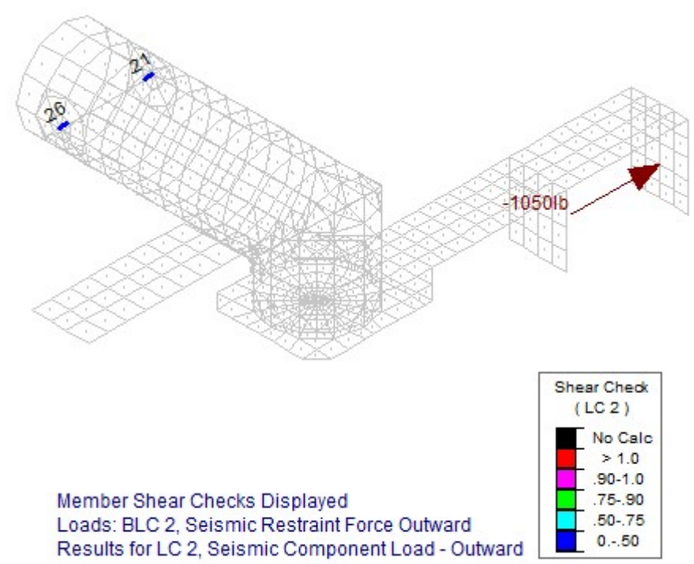


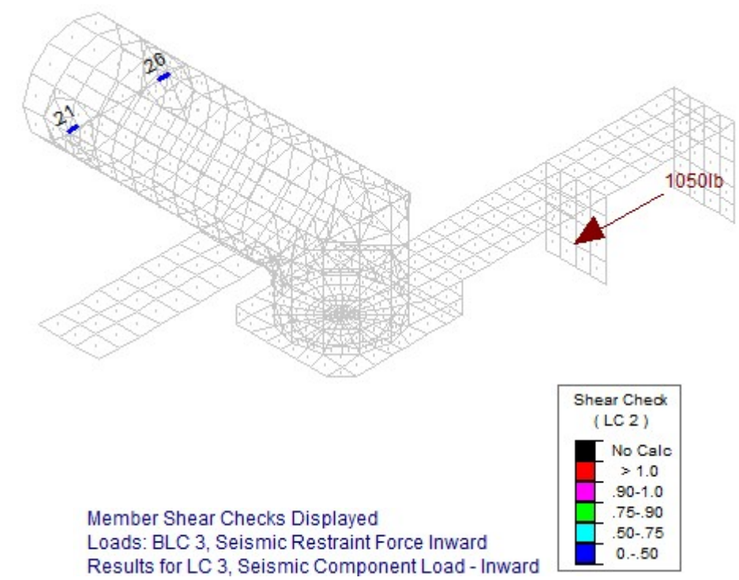


**WP-FLT-325A LEFT SEISMIC RESTRAINT – SHEAR PIN CHECK**