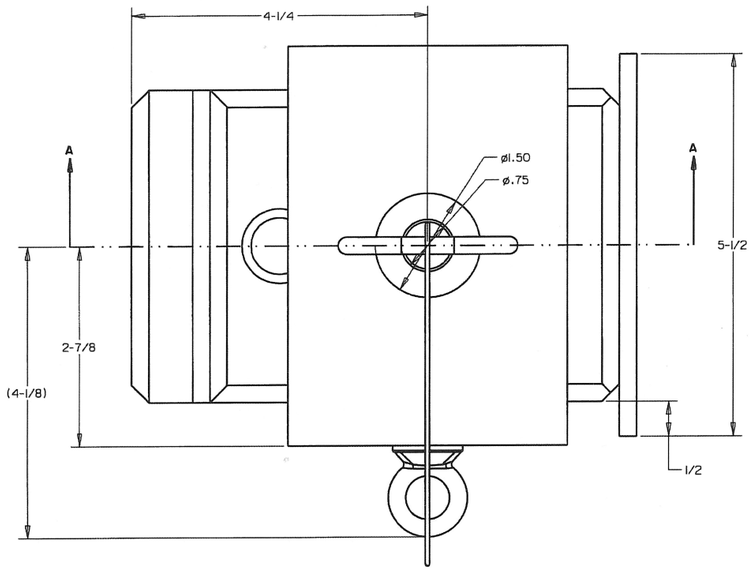

ANCHOR LOCK
PLAN VIEW (QTY:16)

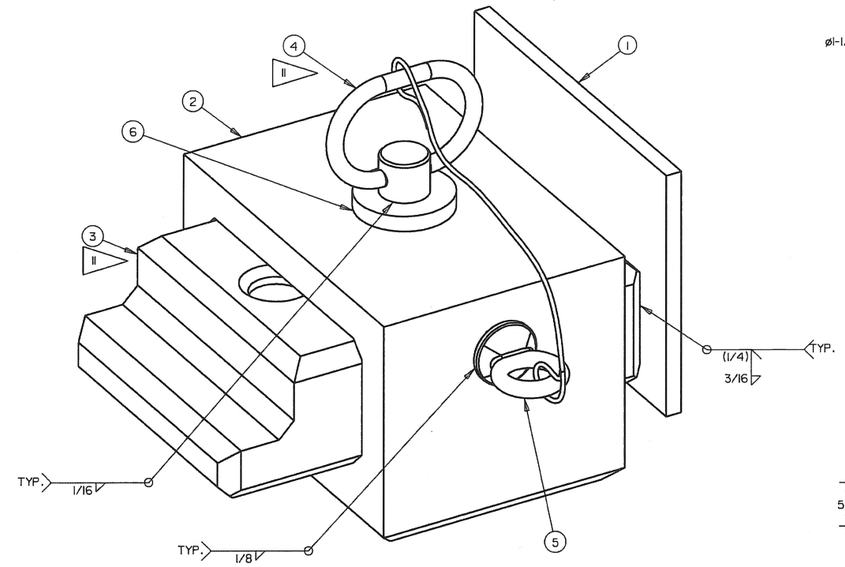

ANCHOR LOCK
ISOMETRIC VIEW (QTY: 16)

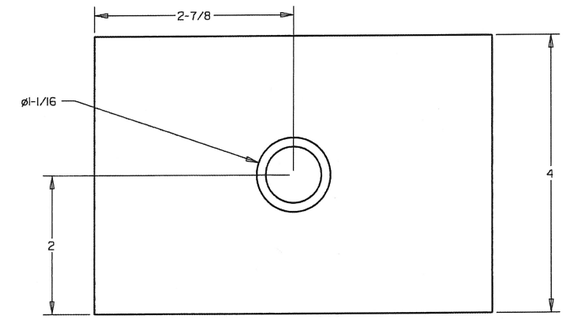

ITEM 2 DETAIL
TOP VIEW

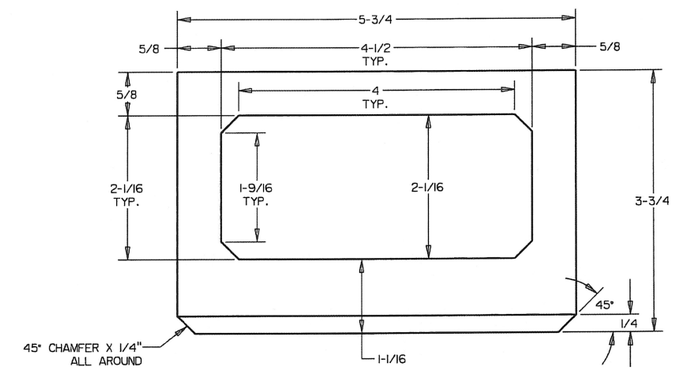

ITEM 2 DETAIL
LEFT VIEW

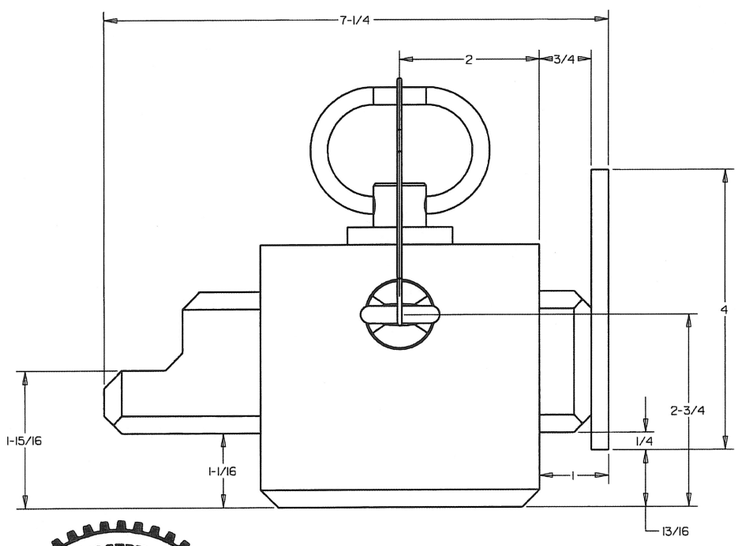

ANCHOR LOCK
ELEVATION VIEW (QTY: 16)

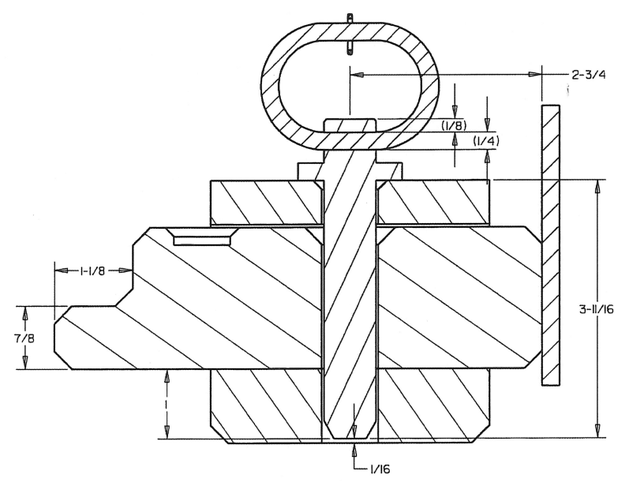

SECTION A-A

ITEM	QTY	DESCRIPTION	SPEC AND/OR PART NO	WRPS QL
6	16	ROUND PLATE, 1-1/2" OD X 3/4" ID X 1/4" THK., 304 S.S.	ASTM A240	3
5	16	FIXED WELD-ON TIE-DOWN RING, 5/8" INNER WIDTH, 1-5/16" HIGH, 18-8 S.S.	MCMASTER CARR #8892T11 OR EQUIV.	3
4	16	3/4" DIA. ROUND BAR W/ LANYARD HOLE, 3-11/16" LG., 304 S.S., SEE ITEM 4 DETAIL ON SHT. 4	ASTM A276	2
3	16	PLATE, 7" X 4-1/2" X 2" THK., 304 S.S., SEE ITEM 3 DETAIL ON SHT. 4	ASTM A240	2
2	16	PLATE, 5-3/4" X 4" X 3-3/4" THK., 304 S.S. SEE ITEM 2 DETAIL ON SHT. 3	ASTM A240	3
1	16	PLATE, 5-1/2" X 4" X 1/4" THK., 304 S.S.	ASTM A240	3

BLDG. NO.: N/A

CAUTION
NOT COMPLETE WITHOUT CURRENT CHANGE DOCUMENTS FROM DATABASE

ATTENTION
DESTROY THIS DOCUMENT BY SHREDDING
MAY CONTAIN SENSITIVE INFORMATION

INDEX NO.: 1001

NAME	DATE/ COMPANY
DRAWN BY	N/A AVT
DRAFTING APPROVAL	N/A AVT
DISCIPLINE ENGINEER	N/A AVT
DESIGN AUTHORITY	N/A AVT

U.S. DEPARTMENT OF ENERGY
OFFICE OF RIVER PROTECTION

TSCR
ANCHORING BASE
FOR STORAGE PAD

SIZE: D | DRAWING NUMBER: H-14-111293 | SHEET: 3 | REV: 0

SCALE: NONE

PLOTID

	.X	.XX	.XXX
LINEAR TOLERANCE	±1/16	±	±
ANGULAR TOLERANCE	±1°0'	±	±
MATERIAL	AS SPEC'D		
SURFACE FINISH	N/A		
SURFACE TREAT	N/A		

JEREMIAH JOSEPH ROGERS
STATE OF WASHINGTON
48968
REGISTERED
PROFESSIONAL ENGINEER

8/27/19

AVANTech INCORPORATED

AVANTECH PROJECT NO.: 18-13

DWG NUMBER	TITLE
H-14-111250	GENERAL ARRANGEMENT IXC-150

DRAWING TRACEABILITY LIST

REF NUMBER	TITLE
RPP-SPEC-61910	SPECIFICATION FOR THE TSCR DEMONSTRATION PROJECT

REFERENCES

NEXT USED ON

REV NO.	DESCRIPTION	ORIG	CHK	APVD	IDV	DATE
0	INCORPORATED DESIGN CHANGES FOR 100%	RC	CH	RB	N/A	6/20/19

REVISIONS

KL CG FOR VIA TELECON