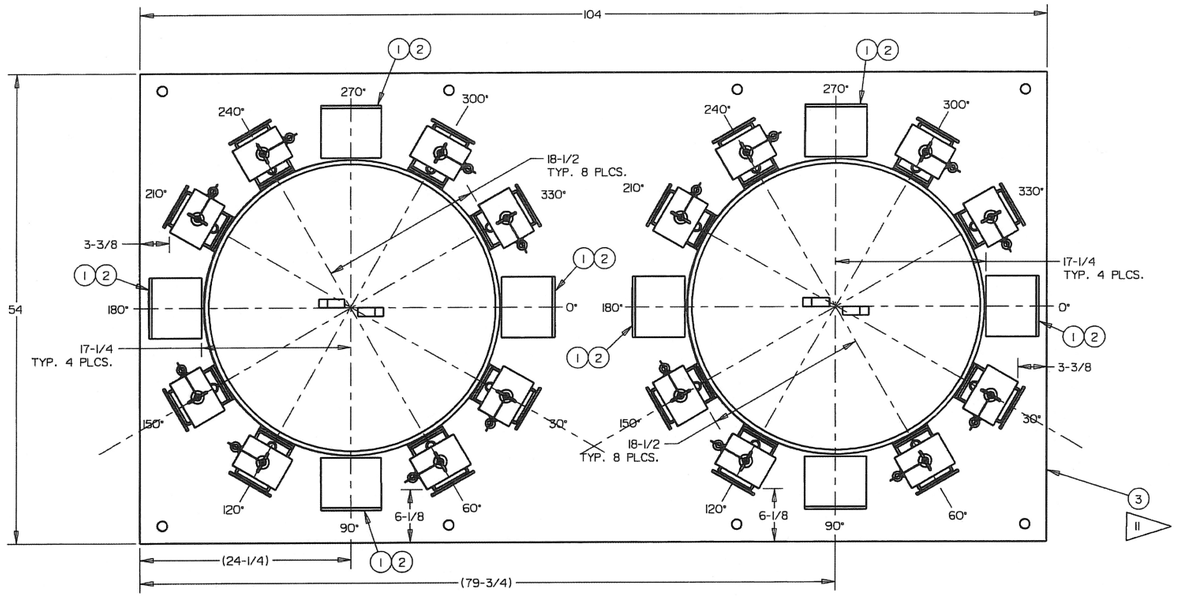

PLAN VIEW

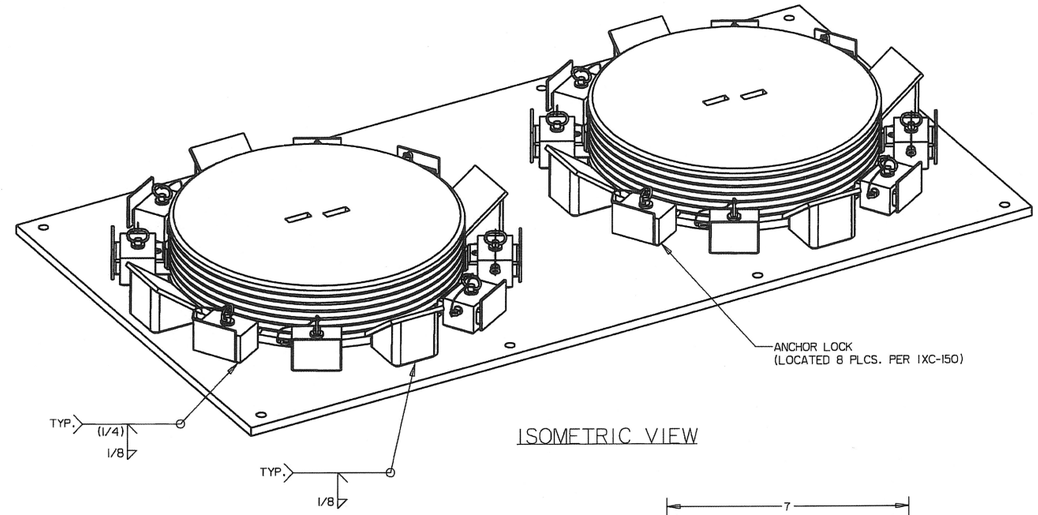

ISOMETRIC VIEW

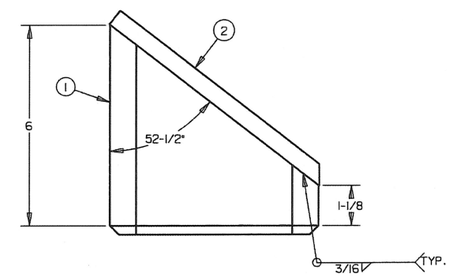

IXC-150 GUIDE
LEFT VIEW

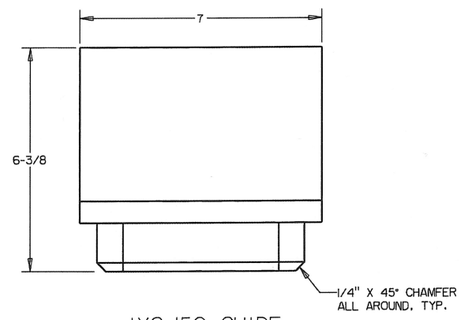

IXC-150 GUIDE
FRONT VIEW

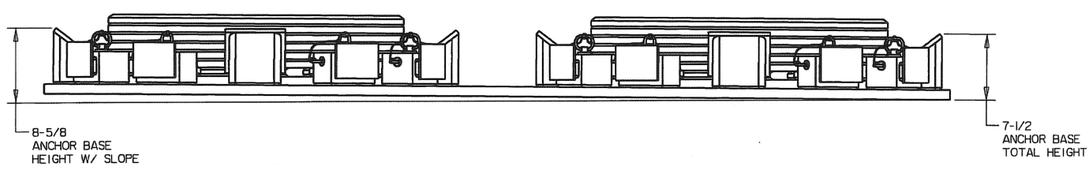

ELEVATION VIEW

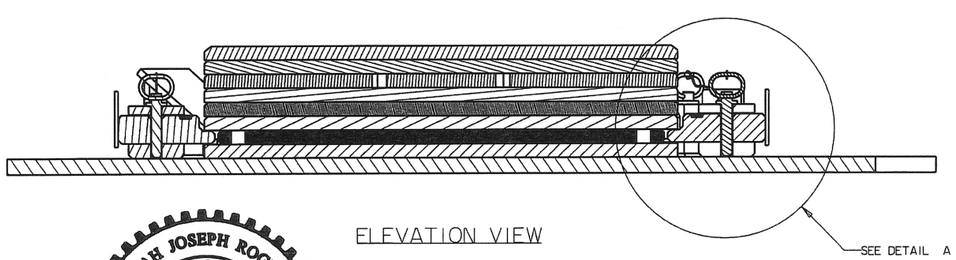

ELEVATION VIEW

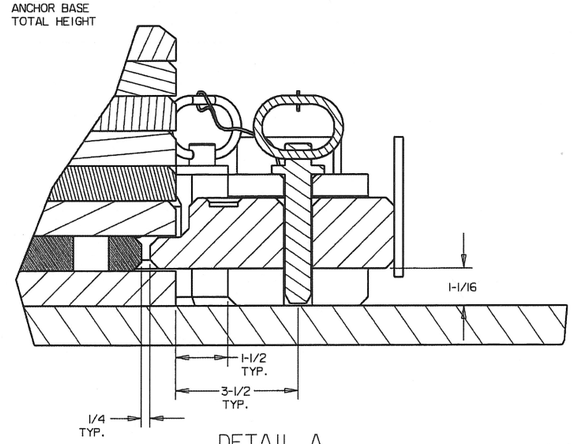

DETAIL A

NOTES:
1. DEBURR, BREAK ALL SHARP EDGES, AND REMOVE ALL WELD SPATTER.
2. ALL WELDING TO BE PERFORMED IN ACCORDANCE WITH AVANTECH WELD PROCEDURES AWS D1.6., 2017 EDITION. AT-D1.6-FCAW-68, AT-D1.6-GMAW-52, & AT-D1.6-GTAW-69
3. WELDING ACCEPTANCE CRITERIA PER AWS D1.6, 2017 EDITION.
4. ALL DIMENSIONS TO UTILIZE TOLERANCE TABLE UNLESS OTHERWISE SPECIFIED.
5. ALL WELDS SHALL BE 100% VT
6. VERTICAL WELDING SHALL BE VERTICAL UP.
7. ALL DIMENSIONS ARE FOR REFERENCE ONLY UNLESS OTHERWISE SPECIFIED.
8. ABBREVIATIONS ARE IN ACCORDANCE WITH ASME Y14.38 (LATEST EDITION).
9. DIMENSIONS AND TOLERANCING ARE PER ASME Y14.38 (LATEST EDITION) ALL DIMENSION ARE IN INCHES.
10. STORAGE BASE WEIGHT: 2250 LB.
11. INDICATES THAT THE ITEM IS SAFETY SIGNIFICANT. ALL SAFETY SIGNIFICANT ITEMS SHALL BE PURCHASED FROM AN EVALUATED SUPPLIER OR COMMERCIAL GRADE DEDICATED PRIOR TO INSTALLATION.

ITEM	QTY	DESCRIPTION	SPEC AND/OR PART NO	WRPS QL
3	1	PLATE, 104" X 54" X 1-1/8" THK., 304 S.S., SEE ITEM 3 DETAIL ON SHT. 4	ASTM A240	2
2	8	PLATE, 7-5/8" X 7" X 1/2" THK., 304 S.S.	ASTM A240	3
1	8	TUBESTEEL, 6" X 6" X 1/4" THK., 6" LG., 304 S.S., ONE END MITERED 37-1/2°	ASTM A554	3

BLDG. NO. N/A	CAUTION NOT COMPLETE WITHOUT CURRENT CHANGE DOCUMENTS FROM DATABASE	ATTENTION DESTROY THIS DOCUMENT BY SHREDDING MAY CONTAIN SENSITIVE INFORMATION	
	NAME	DATE/ COMPANY	U.S. DEPARTMENT OF ENERGY OFFICE OF RIVER PROTECTION
	DRAWN BY	N/A AVT	TSCR ANCHORING BASE FOR STORAGE PAD
	DRAFTING APPROVAL	N/A AVT	
	DISCIPLINE ENGINEER	N/A AVT	
INDEX NO. 1001	DESIGN AUTHORITY	N/A AVT	SCALE: NONE

SIZE	DRAWING NUMBER	SHEET	REV
D	H-14-111293	2	0

REV	DESCRIPTION	ORIG	CHK	APVD	IDV	DATE
0	INCORPORATED DESIGN CHANGES FOR 100%	RC	CH	RB	N/A	6/20/19

REVISIONS

REFERENCES	
RPP-SPEC-61910	SPECIFICATION FOR THE TSCR DEMONSTRATION PROJECT
REF NUMBER	TITLE

NEXT USED ON

DRAWING TRACEABILITY LIST	
H-14-111250	GENERAL ARRANGEMENT IXC-150
DWG NUMBER	TITLE

AVANTECH INCORPORATED
AVANTECH PROJECT NO.: 18-13

	.X	.XX	.XXX
LINEAR TOLERANCE	±1/16	±	±
ANGULAR TOLERANCE	±1/0°	±	±
MATERIAL	AS SPEC'D		
SURFACE FINISH	N/A		
SURFACE TREAT	N/A		

JEREMIAH JOSEPH ROGERS
STATE OF WASHINGTON
48968
REGISTERED
PROFESSIONAL ENGINEER
8/27/19

PLOTID