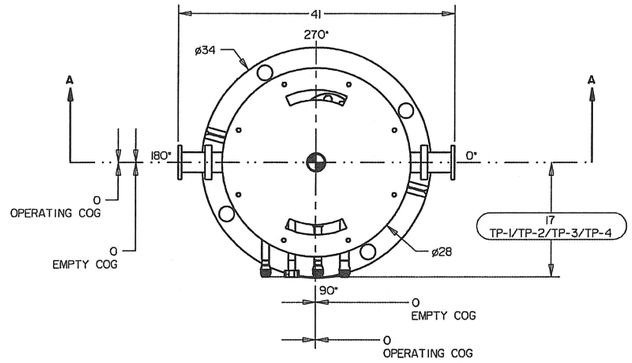

TOP VIEW

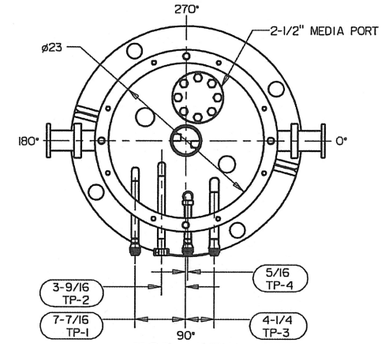

TOP VIEW
(TOP COVER TRANSPARENT)

NOTES:
1. EMPTY WEIGHT: 24,346 LBS
2. OPERATING WEIGHT: 26,790 LBS
3. COG: CENTER OF GRAVITY
4. ALL DIMENSIONS LISTED TO UTILIZE DEFAULT TOLERANCE TABLE UNLESS OTHERWISE SPECIFIED.

PARTS/MATERIAL LIST

QTY REQD -020	QTY REQD -010	PART/DASH NUMBER	NOMENCLATURE/DESCRIPTION	MATERIAL/REFERENCE	SHEET	ITEM NO.
	X	-010	GENERAL ARRANGEMENT IXC-150	-	1	1
X		-020	ION EXCHANGE COLUMN, 316/316L S.S. WETTED MATERIAL, 304/304L BASE PLATES AND STRUCTURAL MATERIAL, LEAD SHIELDING	SEE DRW. H-14-111255	1	2

INTERFACE CONTROL

TP-#	DESCRIPTION	CONNECTION TYPE	MATERIAL	REFERENCE
TP-1	INLET	1-1/2" NPSM CHEMJOINT CJ WELD SPUD	316/316L S.S.	DRW. H-14-111244
TP-2	OUTLET	1-1/2" NPSM CHEMJOINT CJ WELD ADAPTER	316/316L S.S.	DRW. H-14-111244
TP-3	VENT	1-1/2" NPSM CHEMJOINT CJ WELD SPUD	316/316L S.S.	DRW. H-14-111244
TP-4	SWEEP AIR	1-1/2" NPSM CHEMJOINT CJ WELD SPUD	316/316L S.S.	DRW. H-14-111244

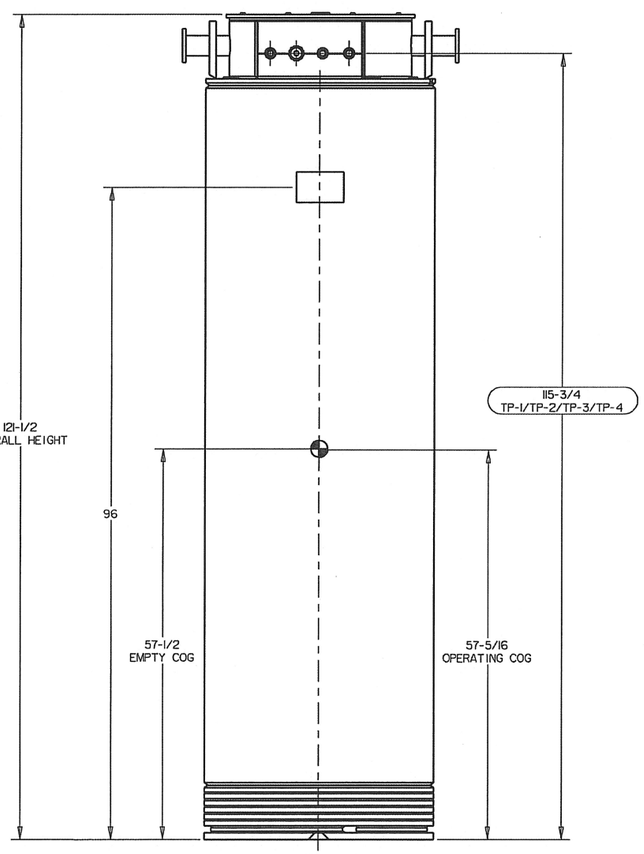

FRONT VIEW

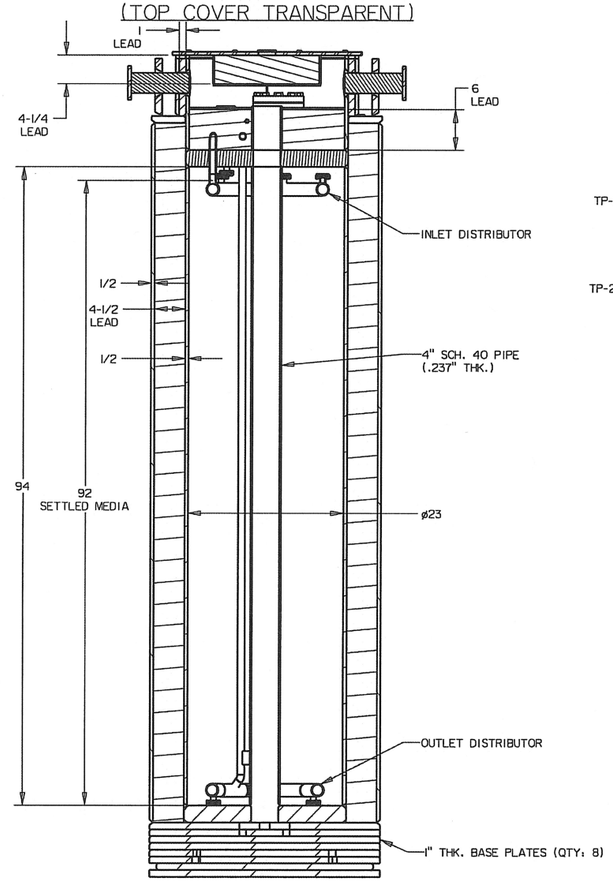

SECTION A-A

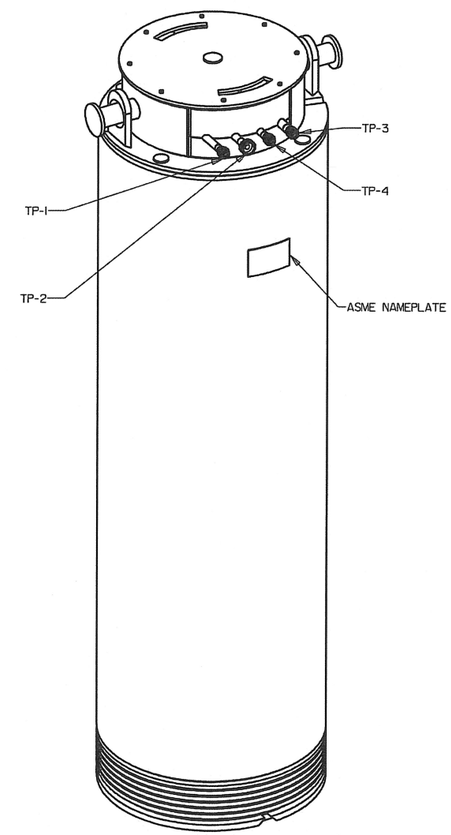

ISOMETRIC VIEW

JEREMIAH JOSEPH ROGERS
STATE OF WASHINGTON
48968
REGISTERED
PROFESSIONAL ENGINEER
8/27/19

	.X	.XX	.XXX
LINEAR TOLERANCE	±1/8	±-	±-
ANGULAR TOLERANCE	±1°0'	±-	±-
MATERIAL	AS SPEC'D		
SURFACE FINISH	N/A		
SURFACE TREAT	N/A		

AVANTech INCORPORATED
AVANTECH PROJECT NO.: 18-13

DWG NUMBER	TITLE
H-14-111244	GENERAL ARRANGEMENT PROCESS ENCLOSURE EQUIPMENT LAYOUT

DRAWING TRACEABILITY LIST

REF NUMBER	TITLE
RPP-SPEC-61910	SPECIFICATION FOR THE TSCR DEMONSTRATION PROJECT

REFERENCES

NEXT USED ON

REV	DESCRIPTION	ORIG	CHK	APVD	IDV	DATE
3	INCORPORATED DESIGN CHANGES	RC	CS	CH	-	8/27/19

REVISIONS

BLDG. NO.	CAUTION NOT COMPLETE WITHOUT CURRENT CHANGE DOCUMENTS FROM DATABASE		ATTENTION DESTROY THIS DOCUMENT BY SHREDDING MAY CONTAIN SENSITIVE INFORMATION
POR655	NAME	DATE/ COMPANY	U.S. DEPARTMENT OF ENERGY OFFICE OF RIVER PROTECTION
	DRAWN BY	N/A AVT	GENERAL ARRANGEMENT IXC-150
	DRAFTING APPROVAL	N/A AVT	
INDEX NO. 2500	DISCIPLINE ENGINEER	N/A AVT	SIZE D · DRAWING NUMBER H-14-111250 · SHEET 1 · REV 3
	DESIGN AUTHORITY	N/A AVT	SCALE: N/A

PLOTID