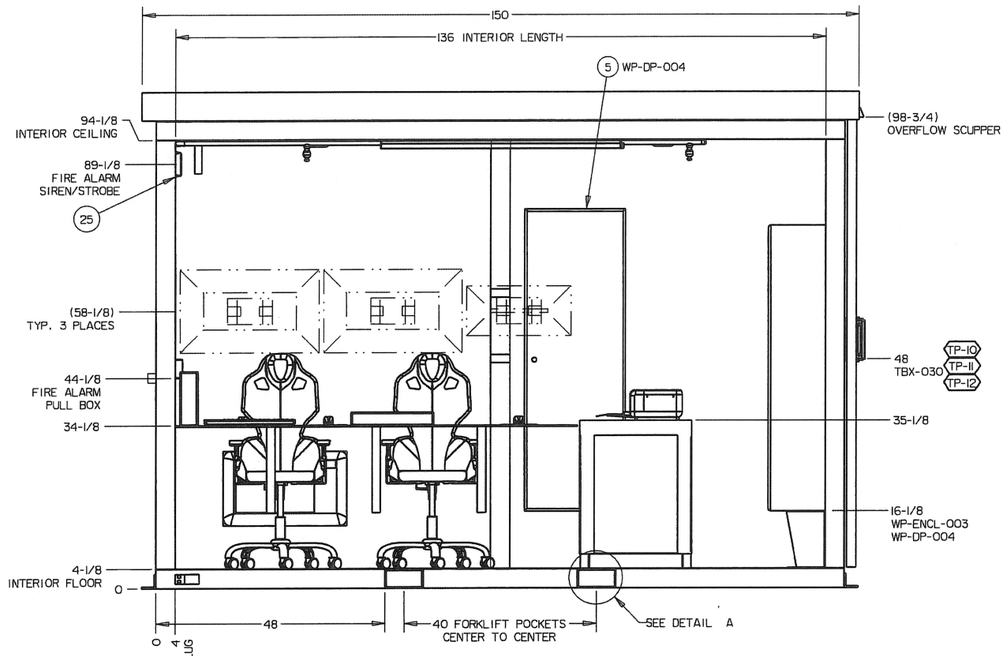

FRONT VIEW
(FRONT WALL SHOWN TRANSPARENT)
(MONITORS SHOWN TRANSPARENT)

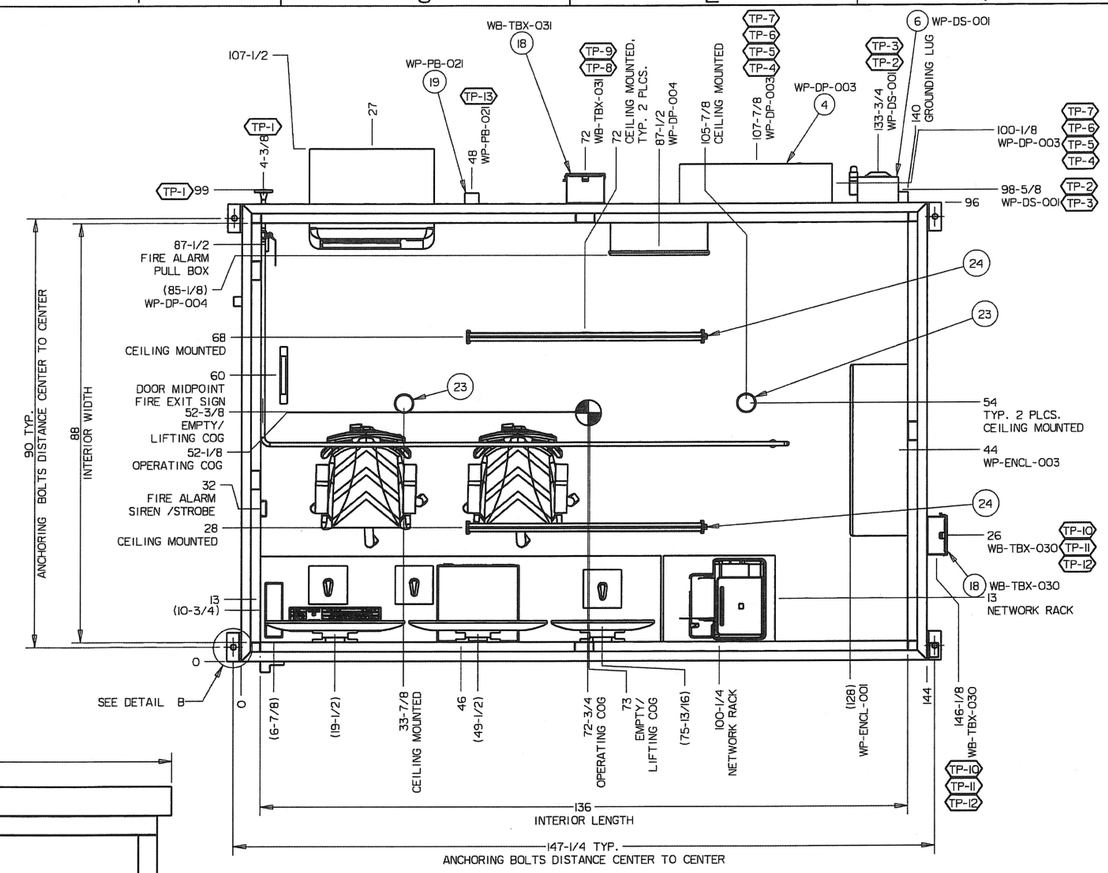

TOP VIEW
(ROOF NOT SHOWN)

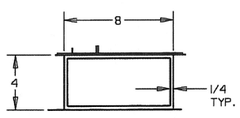

DETAIL A
(FORKLIFT POCKET DETAIL)

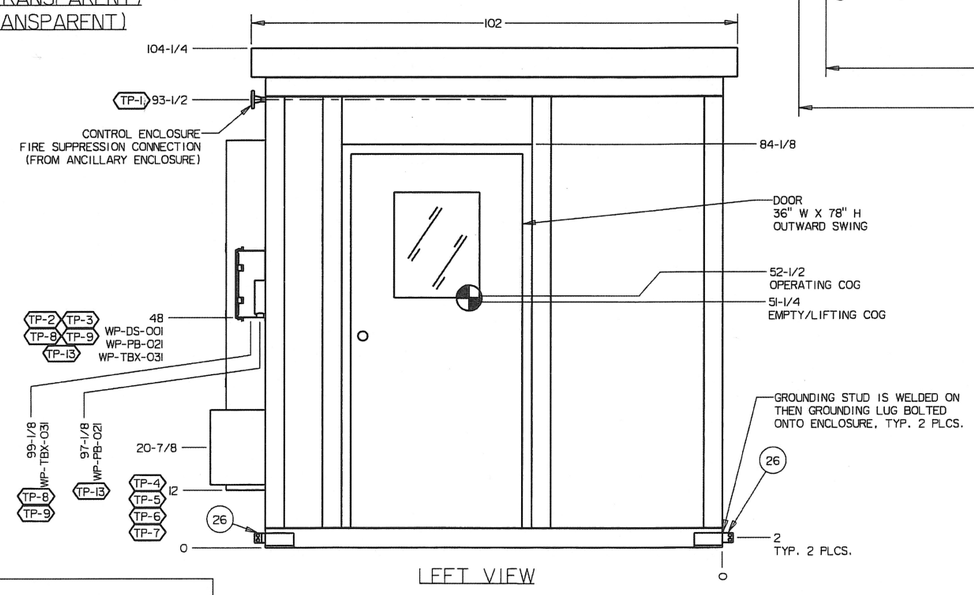

LEFT VIEW

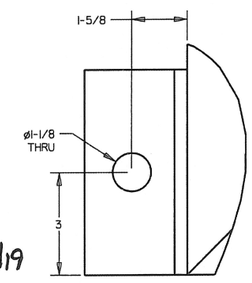

DETAIL B
TYP. 4 PLCS.

	.X	.XX	.XXX
LINEAR TOLERANCE	±1/8	±"	±"
ANGULAR TOLERANCE	±0°	±"	±"
MATERIAL	AS SPEC'D		
SURFACE FINISH	N/A		
SURFACE TREAT	N/A		

AVANTech INCORPORATED

AVANTECH PROJECT NO.: 18-13

DWG NUMBER	TITLE
H-14-111243	GENERAL ARRANGEMENT TSCR EQUIPMENT LAYOUT

DRAWING TRACEABILITY LIST

REF NUMBER	TITLE
RPP-SPEC-61910	SPECIFICATION FOR THE TSCR DEMONSTRATION PROJECT

REFERENCES

NEXT USED ON

REV	DESCRIPTION	ORIG	CHK	APVD	IDV	DATE
3	REMOVED FIRE SUPPRESSION PANELS AND MOVED PANEL WB-TBX-031	RC	CS	CH	-	8/26/19

REV NO.	DESCRIPTION

REVISIONS

BLDG. NO. POR668

INDEX NO. 1000

CAUTION
NOT COMPLETE WITHOUT CURRENT CHANGE DOCUMENTS FROM DATABASE

ATTENTION
DESTROY THIS DOCUMENT BY SHREDDING
MAY CONTAIN SENSITIVE INFORMATION

	NAME	DATE/ COMPANY
DRAWN BY		N/A / AVT
DRAFTING APPROVAL		N/A / AVT
DISCIPLINE ENGINEER		N/A / AVT
DESIGN AUTHORITY		N/A / AVT

U.S. DEPARTMENT OF ENERGY
OFFICE OF RIVER PROTECTION

GENERAL ARRANGEMENT
CONTROL ENCLOSURE
EQUIPMENT LAYOUT

SIZE	DRAWING NUMBER	SHEET	REV
D	H-14-111246	2	3

SCALE: NONE

PLOTID