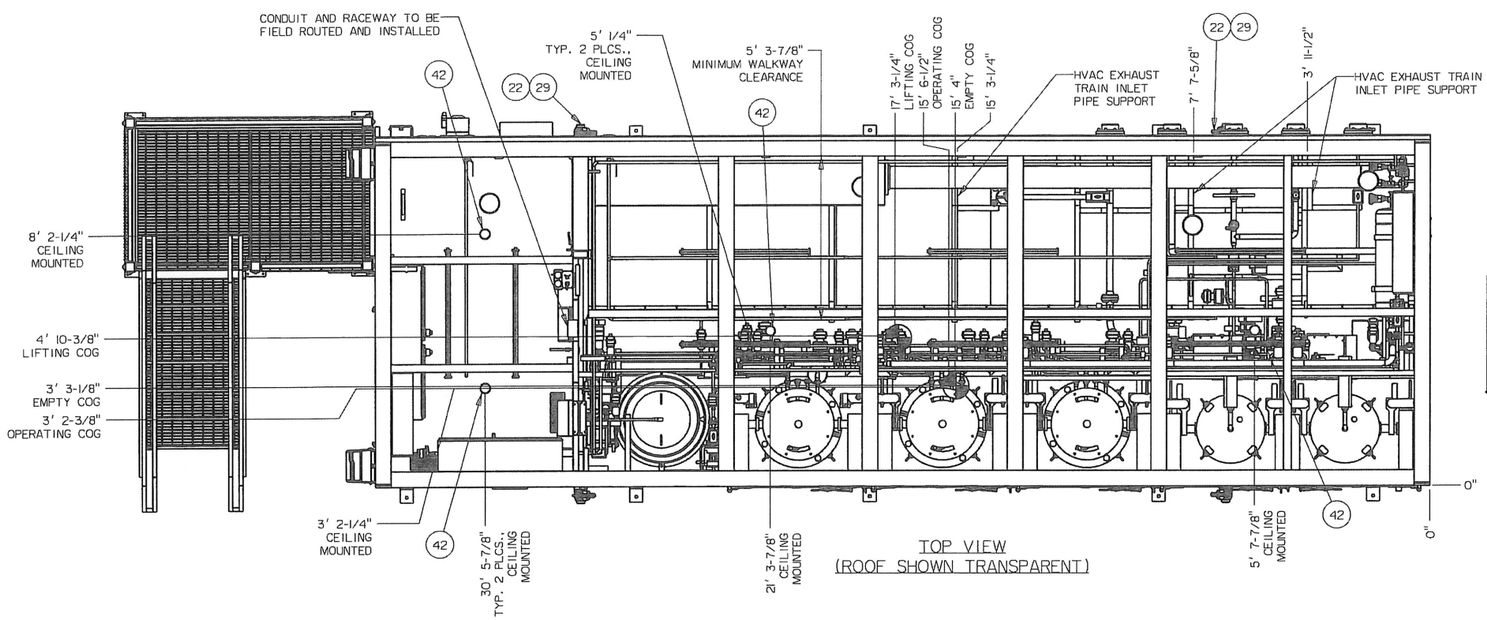

TOP VIEW
(ROOF SHOWN TRANSPARENT)

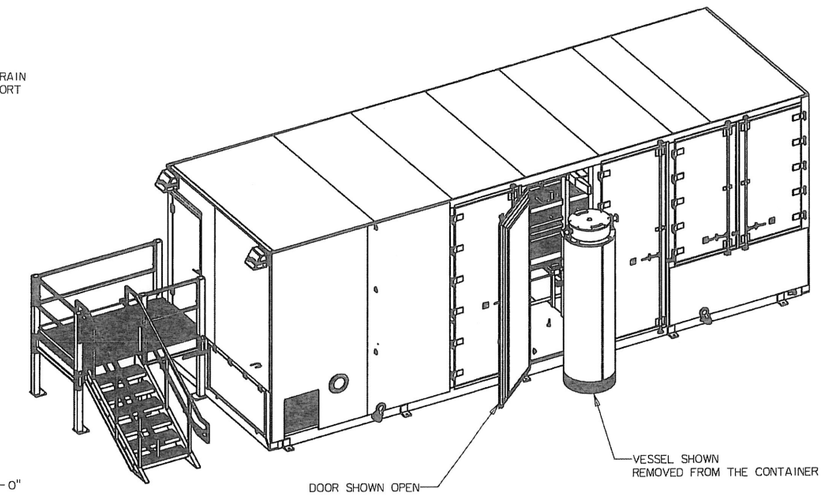

FRONT ISOMETRIC VIEW
(WALLS AND ROOF SHOWN TRANSPARENT)

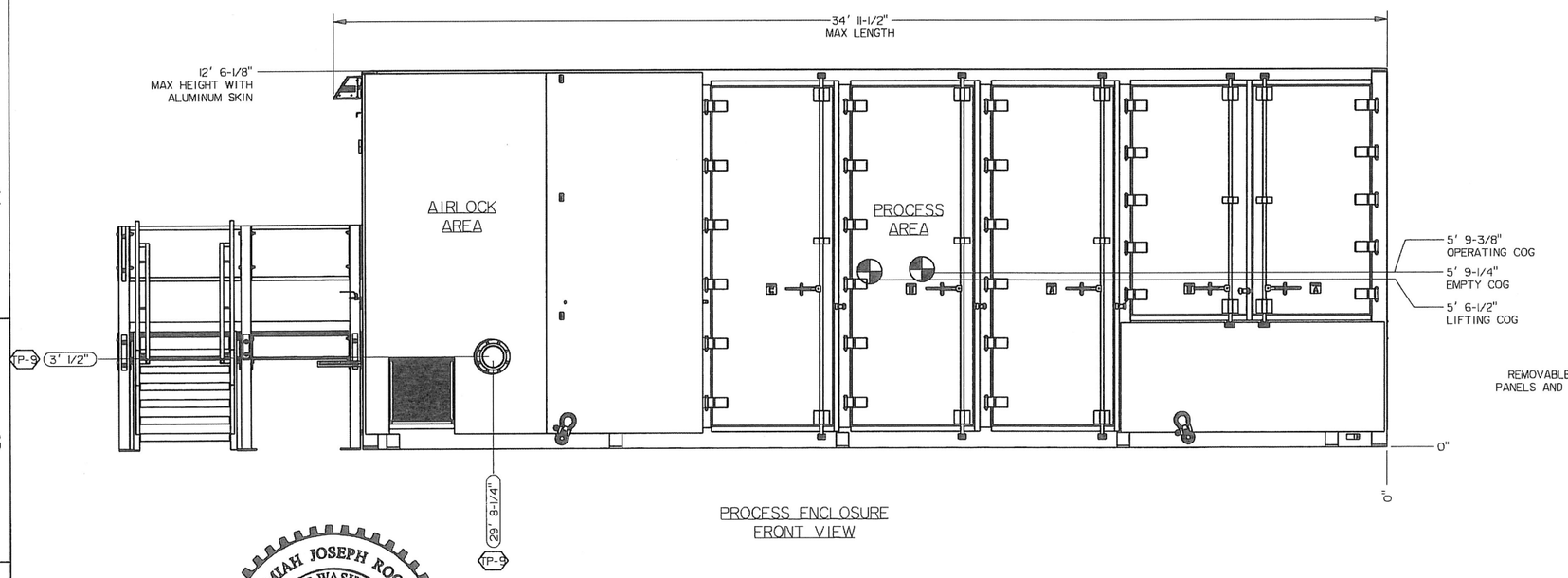

PROCESS ENCLOSURE
FRONT VIEW

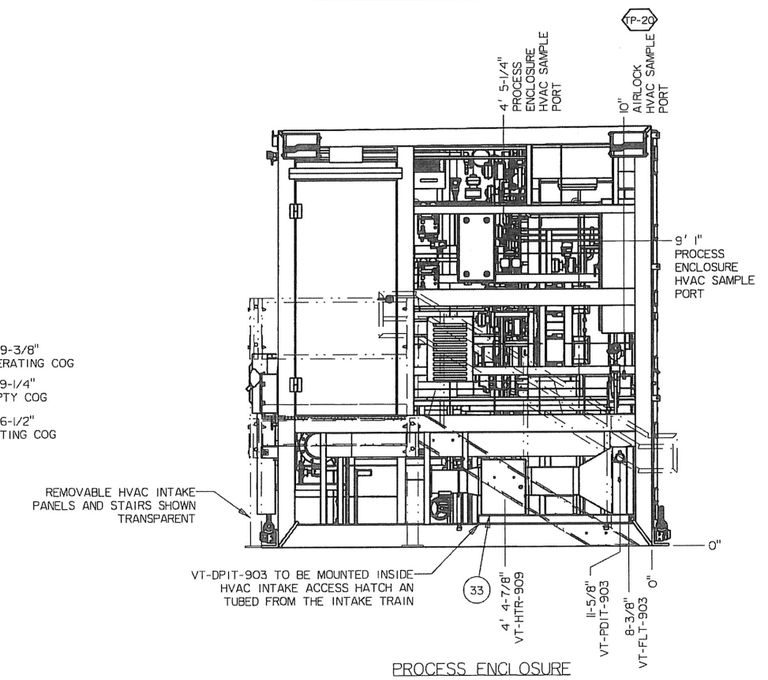

PROCESS ENCLOSURE
LEFT VIEW

JEREMIAH JOSEPH ROGERS
STATE OF WASHINGTON
48968
REGISTERED
PROFESSIONAL ENGINEER
08/29/19

	.X	.XX	.XXX
LINEAR TOLERANCE	±1/8	±-	±-
ANGULAR TOLERANCE	±0°	±-	±-
MATERIAL	AS SPEC'D		
SURFACE FINISH	N/A		
SURFACE TREAT	N/A		

AVANTech INCORPORATED

AVANTech PROJECT NO.: 18-13

DWG NUMBER	TITLE
H-14-111243	GENERAL ARRANGEMENT TSCR EQUIPMENT LAYOUT

DRAWING TRACEABILITY LIST

REF NUMBER	TITLE
RPP-SPEC-61910	SPECIFICATION FOR THE TSCR DEMONSTRATION PROJECT

REFERENCES

NEXT USED ON

REV NO.	DESCRIPTION	ORIG	CHK	APVD	IDV	DATE
3	INCORPORATED CUSTOMER COMMENTS & UPDATED BOM	CS	CH	JR	N/A	8/29/19

REVISIONS

BLDG. NO. P0R655

INDEX NO. 1000

CAUTION
NOT COMPLETE WITHOUT CURRENT CHANGE DOCUMENTS FROM DATABASE

ATTENTION
DESTROY THIS DOCUMENT BY SHREDDING MAY CONTAIN SENSITIVE INFORMATION

NAME	DATE/ COMPANY
DRAWN BY	N/A AVT
DRAFTING APPROVAL	N/A AVT
DISCIPLINE ENGINEER	N/A AVT
DESIGN AUTHORITY	N/A AVT

U.S. DEPARTMENT OF ENERGY
OFFICE OF RIVER PROTECTION

GENERAL ARRANGEMENT PROCESS ENCLOSURE CENTER OF GRAVITY

SIZE	DRAWING NUMBER	SHEET	REV
D	H-14-111244	8	3

SCALE: NONE

PLOTID