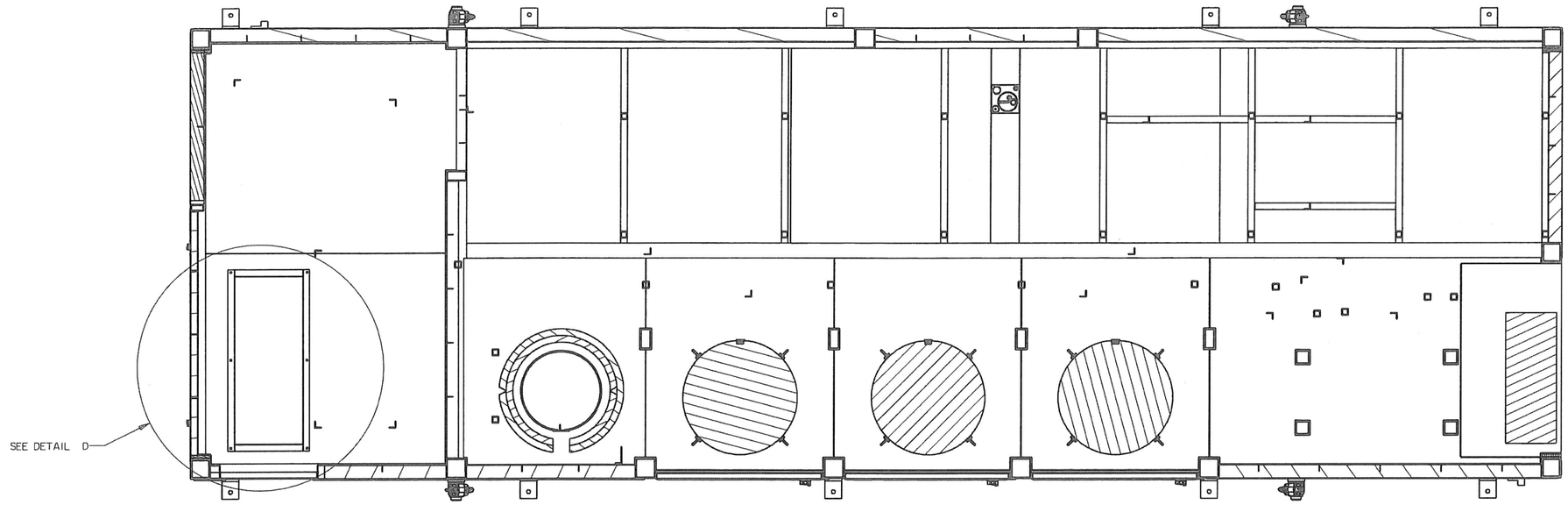

SECTION D-D

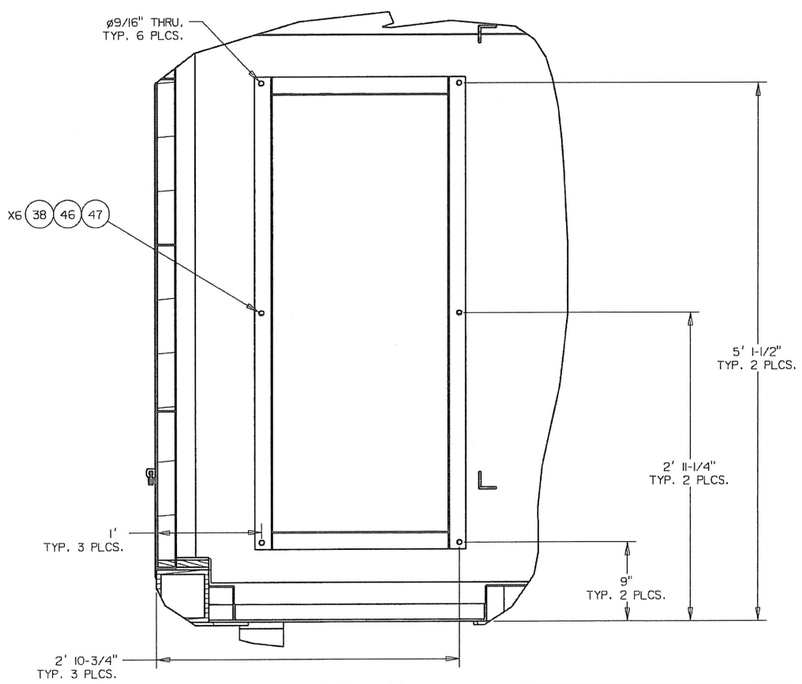

DETAIL D
(HVAC INTAKE
TRAIN MOUNTING)

	.X	.XX	.XXX
LINEAR TOLERANCE	±1/8	±	±
ANGULAR TOLERANCE	±1°0'	±	±
MATERIAL	AS SPEC'D		
SURFACE FINISH	N/A		
SURFACE TREAT	N/A		

AVANTech INCORPORATED

AVANTECH PROJECT NO.: 18-13

DWG NUMBER	TITLE
H-14-111244	GENERAL ARRANGEMENT TSCR EQUIPMENT LAYOUT

DRAWING TRACEABILITY LIST

REF NUMBER	TITLE
RPP-SPEC-61910	SPECIFICATION FOR THE TSCR DEMONSTRATION PROJECT

REFERENCES

NEXT USED ON

REV	DESCRIPTION	ORIG	CHK	APVD	IDV	DATE
3	INCORPORATED CUSTOMER COMMENTS & UPDATED BOM	CS	CH	JR	N/A	8/29/19

REV NO.	DESCRIPTION

REVISIONS

BLDG. NO. POR655

INDEX NO. 1000

CAUTION
NOT COMPLETE WITHOUT CURRENT CHANGE DOCUMENTS FROM DATABASE

ATTENTION
DESTROY THIS DOCUMENT BY SHREDDING
MAY CONTAIN SENSITIVE INFORMATION

	NAME	DATE/ COMPANY
DRAWN BY		N/A AVT
DRAFTING APPROVAL		N/A AVT
DISCIPLINE ENGINEER		N/A AVT
DESIGN AUTHORITY		N/A AVT

U.S. DEPARTMENT OF ENERGY
OFFICE OF RIVER PROTECTION

GENERAL ARRANGEMENT
PROCESS ENCLOSURE
EQUIPMENT LAYOUT

SIZE	DRAWING NUMBER	SHEET	REV
D	H-14-111244	7	3

SCALE: NONE

PLOTID