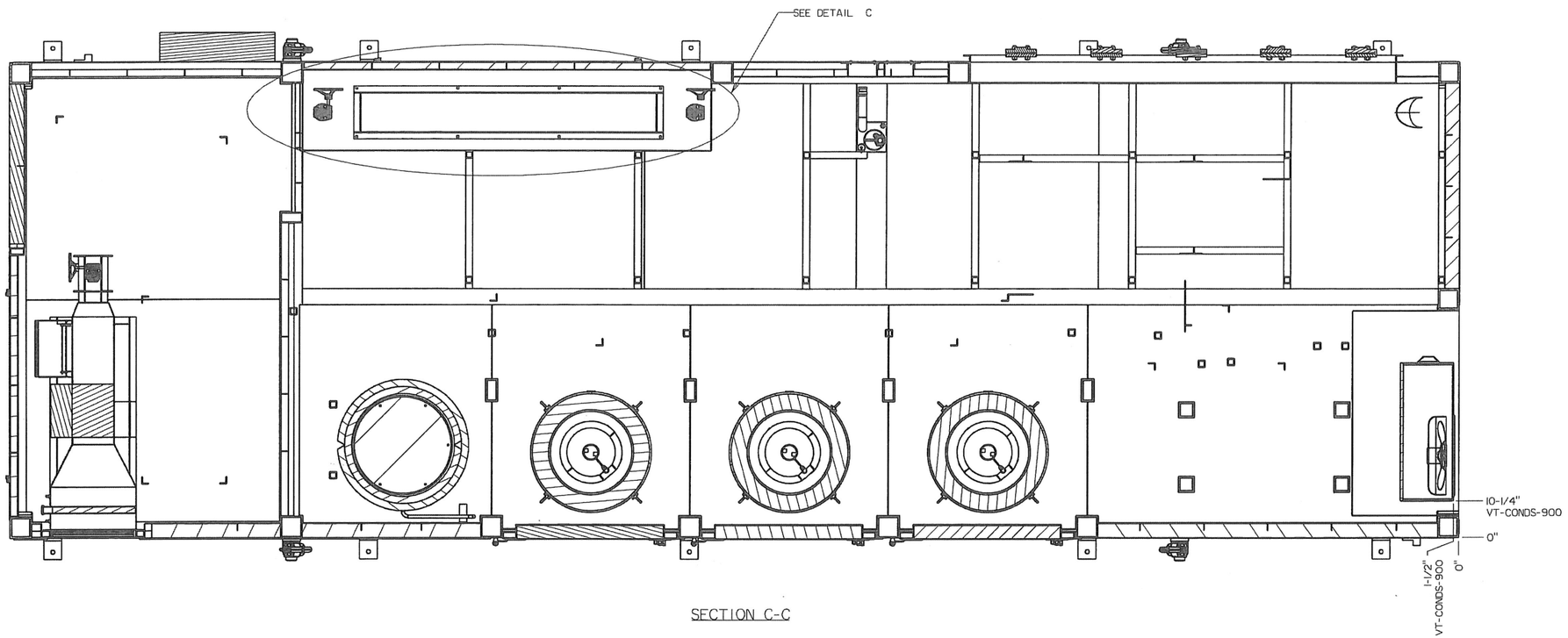

SECTION C-C

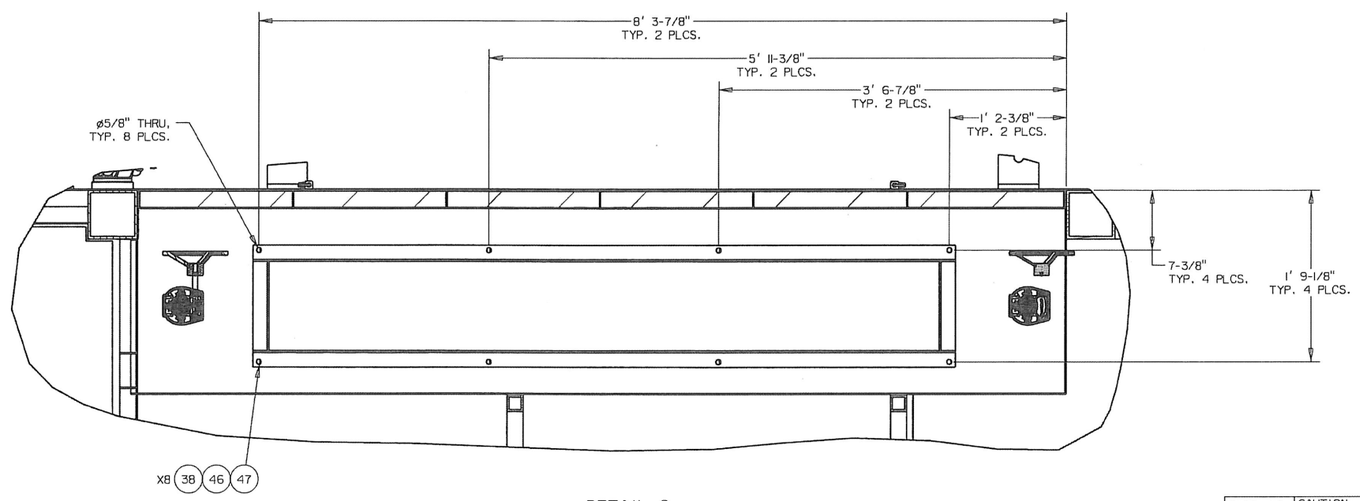

DETAIL C
(HVAC EXHAUST
TRAIN MOUNTING)

JEREMIAH JOSEPH ROGERS
STATE OF WASHINGTON
48968
REGISTERED
PROFESSIONAL ENGINEER
8/29/19

AVANTech INCORPORATED

AVANTECH PROJECT NO.: 18-13

DRAWING TRACEABILITY LIST	
DWG NUMBER	TITLE
H-14-111244	GENERAL ARRANGEMENT TSCR EQUIPMENT LAYOUT

REFERENCES	
REF NUMBER	TITLE
RPP-SPEC-61910	SPECIFICATION FOR THE TSCR DEMONSTRATION PROJECT
NEXT USED ON	

REVISIONS						
REV	DESCRIPTION	ORIG	CHK	APVD	IDV	DATE
3	INCORPORATED CUSTOMER COMMENTS & UPDATED BOM	CS	CH	JR	N/A	8/29/19
REV NO.	DESCRIPTION					

	.X	.XX	.XXX
LINEAR TOLERANCE	±1/8	±-	±-
ANGULAR TOLERANCE	±0°	±-	±-
MATERIAL	AS SPEC'D		
SURFACE FINISH	N/A		
SURFACE TREAT	N/A		

BLDG. NO. POR655

INDEX NO. 1000

CAUTION
NOT COMPLETE WITHOUT CURRENT CHANGE DOCUMENTS FROM DATABASE

ATTENTION
DESTROY THIS DOCUMENT BY SHREDDING
MAY CONTAIN SENSITIVE INFORMATION

U.S. DEPARTMENT OF ENERGY
OFFICE OF RIVER PROTECTION

GENERAL ARRANGEMENT
PROCESS ENCLOSURE
EQUIPMENT LAYOUT

NAME	DATE/ COMPANY
DRAWN BY	N/A AVT
DRAFTING APPROVAL	N/A AVT
DISCIPLINE ENGINEER	N/A AVT
DESIGN AUTHORITY	N/A AVT

SIZE D | DRAWING NUMBER H-14-111244 | SHEET 6 | REV 3

SCALE: NONE

PLOTID