Independent Qualified Registered Professional Engineer Design Assessment Report For Tank Side Cesium Removal (TSCR) Design

IQRPE Design Assessment Report No. DA-314470-01 Rev. 0

Prepared By

Meier ARCHITECTURE • ENGINEERING

12 W. Kennewick Ave.
Kennewick, WA 99336

At the request of

washington river protection solutions

Richland, Washington 99352

Meier Project No. 18-8388
WRPS Subcontract No. 64658, Release 009

September 9, 2019

TABLE OF CONTENTS

TABLE OF CONTENTS 2

1.0 INTRODUCTION 4
1.1 PROJECT DESCRIPTION 4
1.2 DESIGN REVIEW REQUIREMENTS 14
1.3 DESIGN OVERVIEW FOR TSCR 14
1.3.1 TSCR Process Enclosure 15
1.3.1.1 Waste Transfer Piping 15
1.3.1.2 Filters 15
1.3.1.3 Ion Exchange Columns 15
1.3.1.4 Media Trap 16
1.3.1.5 Delay Tank 16
1.3.1.6 Secondary Containment 16
1.4 SCOPE OF IQRPE DESIGN ASSESSMENT 16
1.4.1 Portions of the TSCR Demonstration Project Included in Scope for IQRPE Certification 16
1.4.2 Portions of the TSCR Demonstration Project Not Included in Scope for IQRPE Certification 17

2.0 ASSESSMENT SUMMARY 17
2.1 CODES, STANDARDS, AND REGULATIONS 17
2.2 BASIS OF DESIGN 17
2.2.1 Structural Design Standards 18
2.2.1.1 TSCR Process Enclosure 19
2.2.1.2 Waste Transfer Piping 20
2.2.1.3 Filters 20
2.2.1.4 Ion Exchange Columns 20
2.2.1.5 Media Trap 21
2.2.1.6 Delay Tank 21
2.2.1.7 Secondary Containment System 21
2.2.1.8 Structural Design Exceptions 21
2.2.2 Waste Compatibility 21
2.2.3 Corrosion Analysis 23
2.2.4 Anticipated Chemistry and Controls 23
2.2.4.1 Compatibility Exceptions 24
2.2.5 Pressure Control System 24
2.2.5.1 TSCR Process Enclosure - Waste Transfer Piping 24
2.2.5.2 Filters 24
2.2.5.3 Ion Exchange Columns 25
2.2.5.4 Media Trap 25
2.2.5.5 Delay Tank 25
2.2.5.6 Pressure Control System Exceptions 26
2.2.6 Secondary Containment System 26
2.2.6.1 Secondary Containment System Exceptions 27
2.2.7 Ancillary Equipment Design 27
2.2.7.1 Ancillary Equipment Design Exceptions 27

2.2.8 P&ID Review 27
2.2.9 Corrosion Assessment 28
2.2.9.1 Corrosion Assessment Exceptions 28
3.0 DESIGN REVIEW ASSESSMENT CERTIFICATIONS 28
4.0 REFERENCES 30

Figures

Figure 1: Hanford Map Showing the Location of the AP DST Tank Farm in the 200 East Area 5
Figure 2: TSCR General Arrangement (RPP-RPT-61030) 6
Figure 3: TSCR Block Flow Diagram (H-14-111241, Sheet 1) 7
Figure 4: Process Enclosure Equipment Layout (H-14-111244, Sheet 4) 8
Figure 5: Process Enclosure Equipment Layout (H-14-111244, Sheet 2) 9
Figure 6: TSCR Ion Exchange Column IXC-150 (H-14-111250, Sheet 1) 10
Figure 7: TSCR Filter (H-14-111251, Sheet 1) 11
Figure 8: TSCR Delay Tank (H-14-111252, Sheet 1) 12
Figure 9: TSCR Media Trap (H-14-111253, Sheet 1) 13

Tables

Table 1: TSCR Demonstration Project Major Component Features 17
Table 2. Metallic Materials in Contact with Tank Waste 22
Table 3. Non-Metallic Materials for Tank Waste-contacting Components 22
Table 4. Select Physical Characteristics of Waste Feed 23
Table 5. Select Chemical Components of Waste Feed 23

1.0 INTRODUCTION

Washington Administrative Code (WAC) 173-303-640, *Tank Systems*, provides a set of requirements for owner/operators of dangerous waste tank systems. This Design Assessment Report is prepared for Washington River Protection Solutions, LLC (WRPS) by an Independent Qualified Registered Professional Engineer (IQRPE) to certify that the proposed tank system will have sufficient structural integrity and is acceptable for storing and treating dangerous waste per WAC 173-303-640(3)(a).

The IQRPE maintains "independence" at all times. Comments and suggestions by others are considered by the IQRPE during the preparation of reports and plans. Only the IQRPE can implement changes to the master IQRPE documents.

1.1 PROJECT DESCRIPTION

Background

The Tank Side Cesium Removal (TSCR) Demonstration Project for the processing of tank waste will provide pretreatment of double-shell tank (DST) supernate from tank farms prior to transfer to the Waste Treatment and Immobilization Plant (WTP) Low Activity Waste (LAW) vitrification facility using double-walled (e.g., pipe-in-pipe) waste transfer lines. The TSCR process will use dead-end filtration to separate undissolved solids from the supernatant. A three (3) ion exchange (IX) column system will remove soluble radioactive cesium (Cs) from the filtered liquid. Following Cs removal, the resulting treated LAW stream is then transferred to AP Farm DST 241-AP-106 for temporary storage before being fed to the WTP LAW facility for vitrification. Solids accumulated in the TSCR filters will be periodically back-pulsed and returned to AP Farm DST 241-AP-108.

The TSCR Demonstration Project will support work that will occur on the Hanford Nuclear Reservation in the 200 East Area.

IQRPE Scope

Meier Architecture • Engineering (Meier) provided an IQRPE to perform the design assessment per WRPSs Statement of Work (SOW) No. 314470, *IQRPE for Tank Side Cesium Removal (TSCR) Design Assessment*. The scope includes a detailed IQRPE review and assessment of both draft and issued design documents (drawings, specifications, calculations, etc.) needed to support a Resource Conservation and Recovery Act (RCRA) permit modification request.

The IQRPE performed the design assessment to the requirements of WAC 173-303-640 for the applicable TSCR Demonstration Project components.

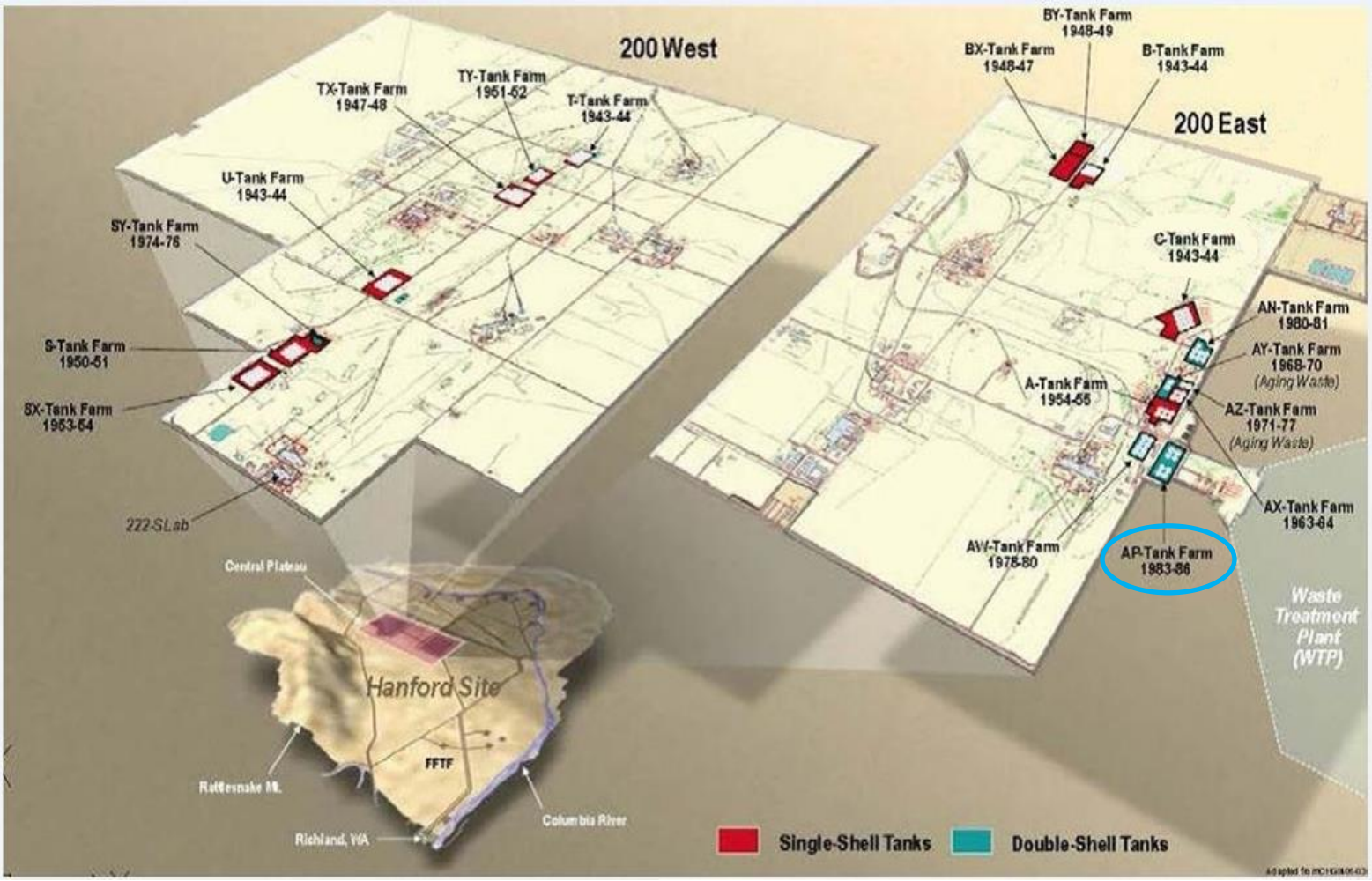

Figure 1: Hanford Map Showing the Location of the AP DST Tank Farm in the 200 East Area

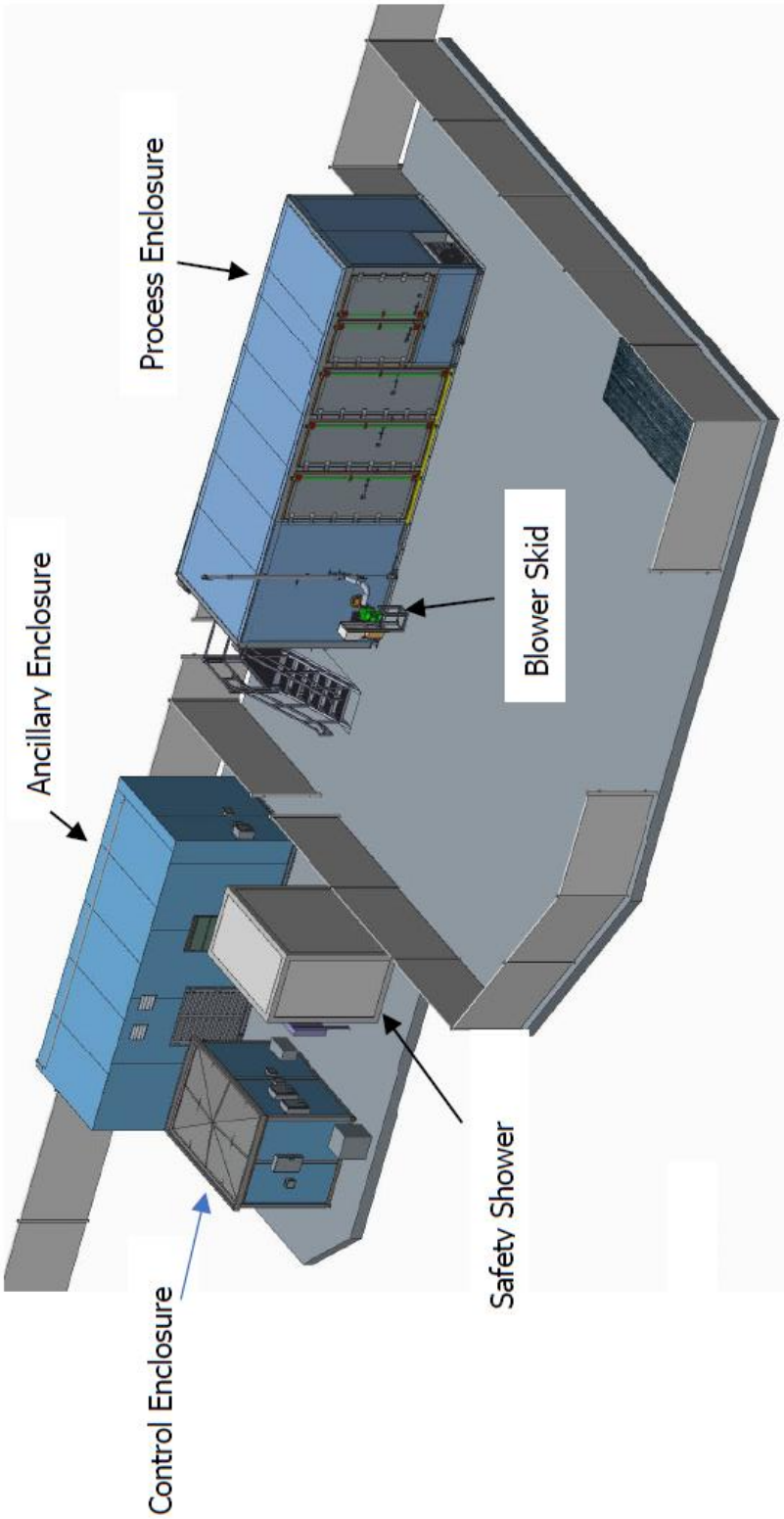

Figure 2: TSCR General Arrangement (RPP-RPT-61030)

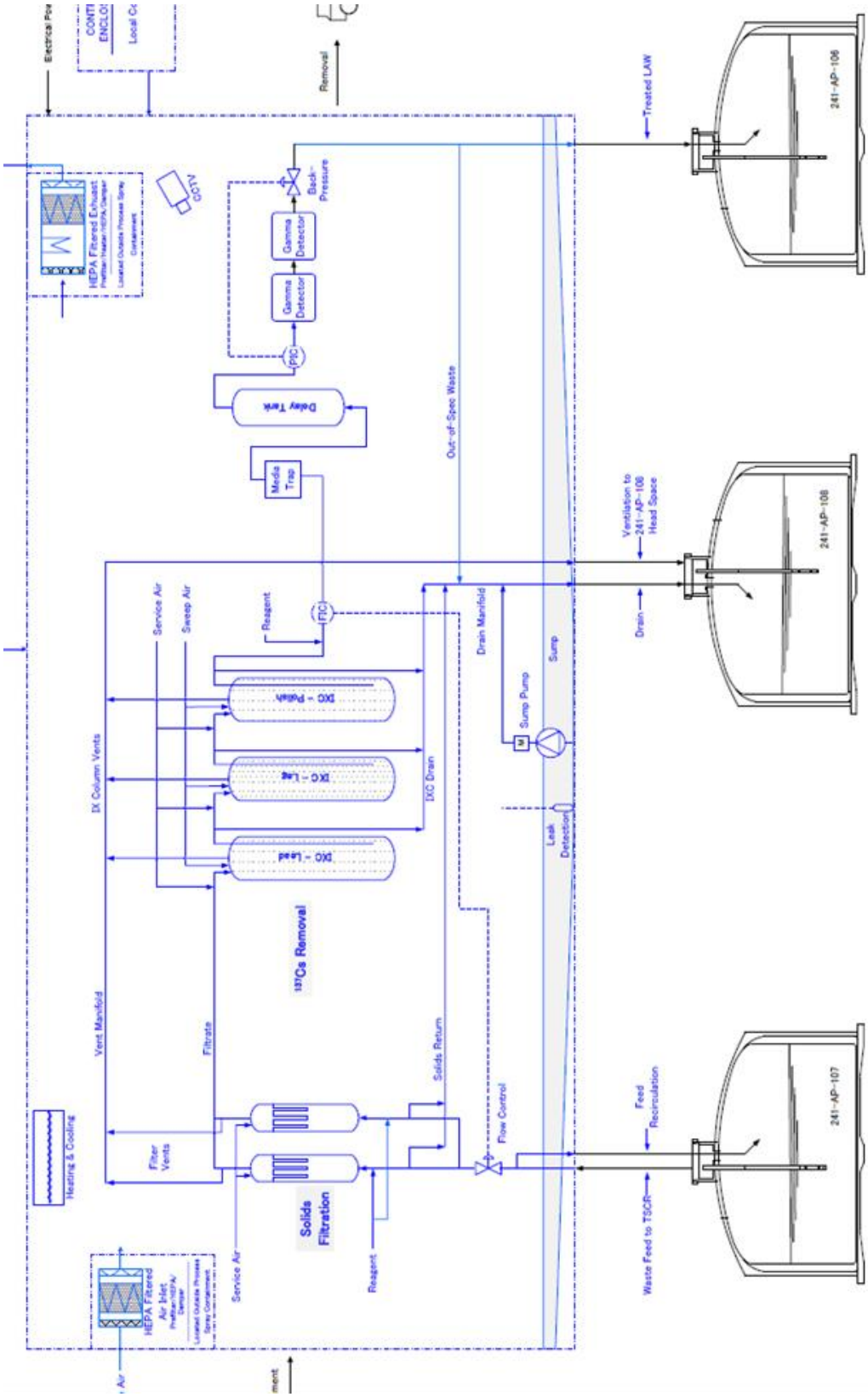

Figure 3: TSCR Block Flow Diagram (H-14-111241, Sheet 1)

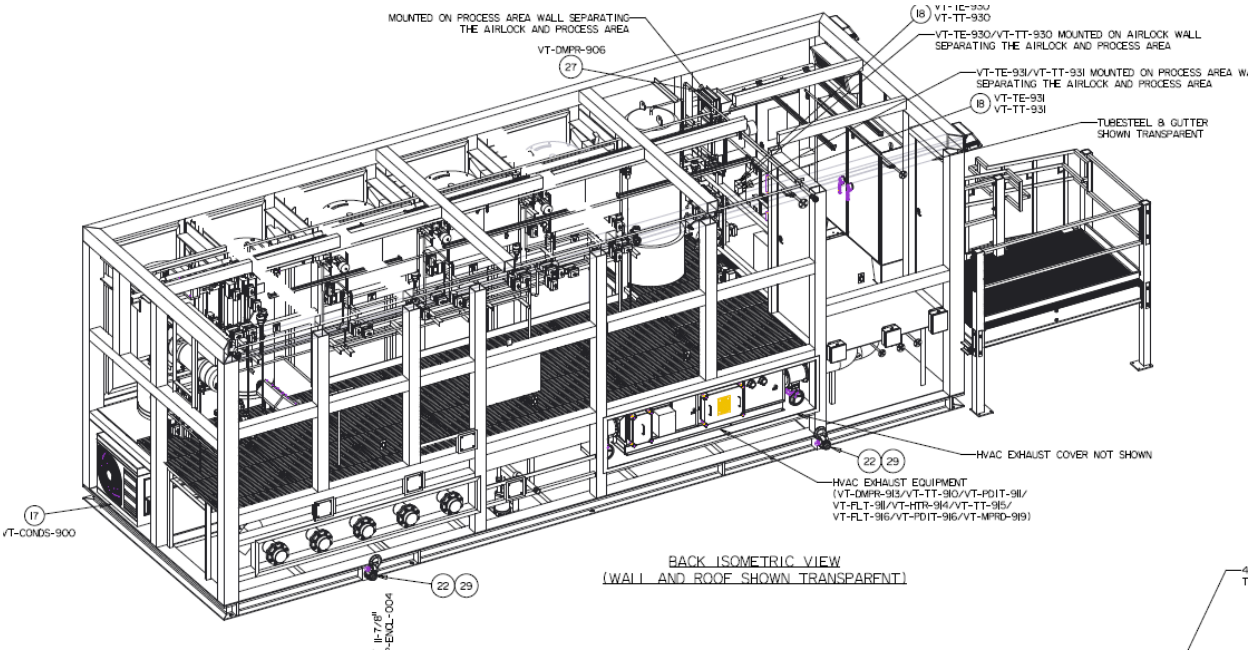

Figure 4: Process Enclosure Equipment Layout (H-14-111244, Sheet 4)

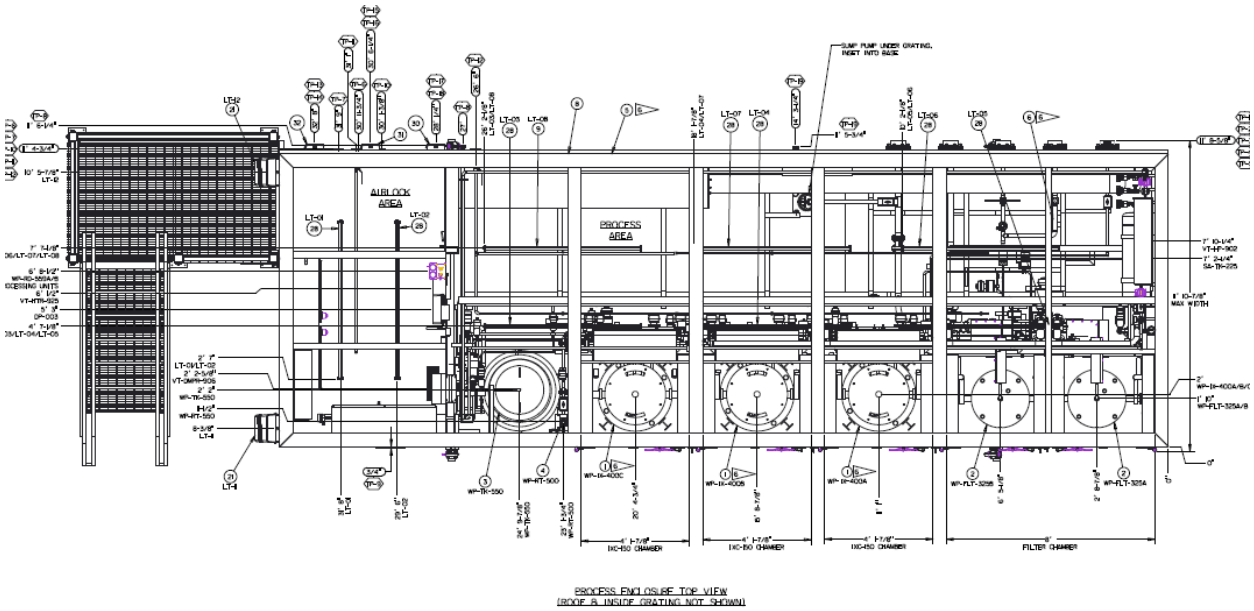

Figure 5: Process Enclosure Equipment Layout (H-14-111244, Sheet 2)

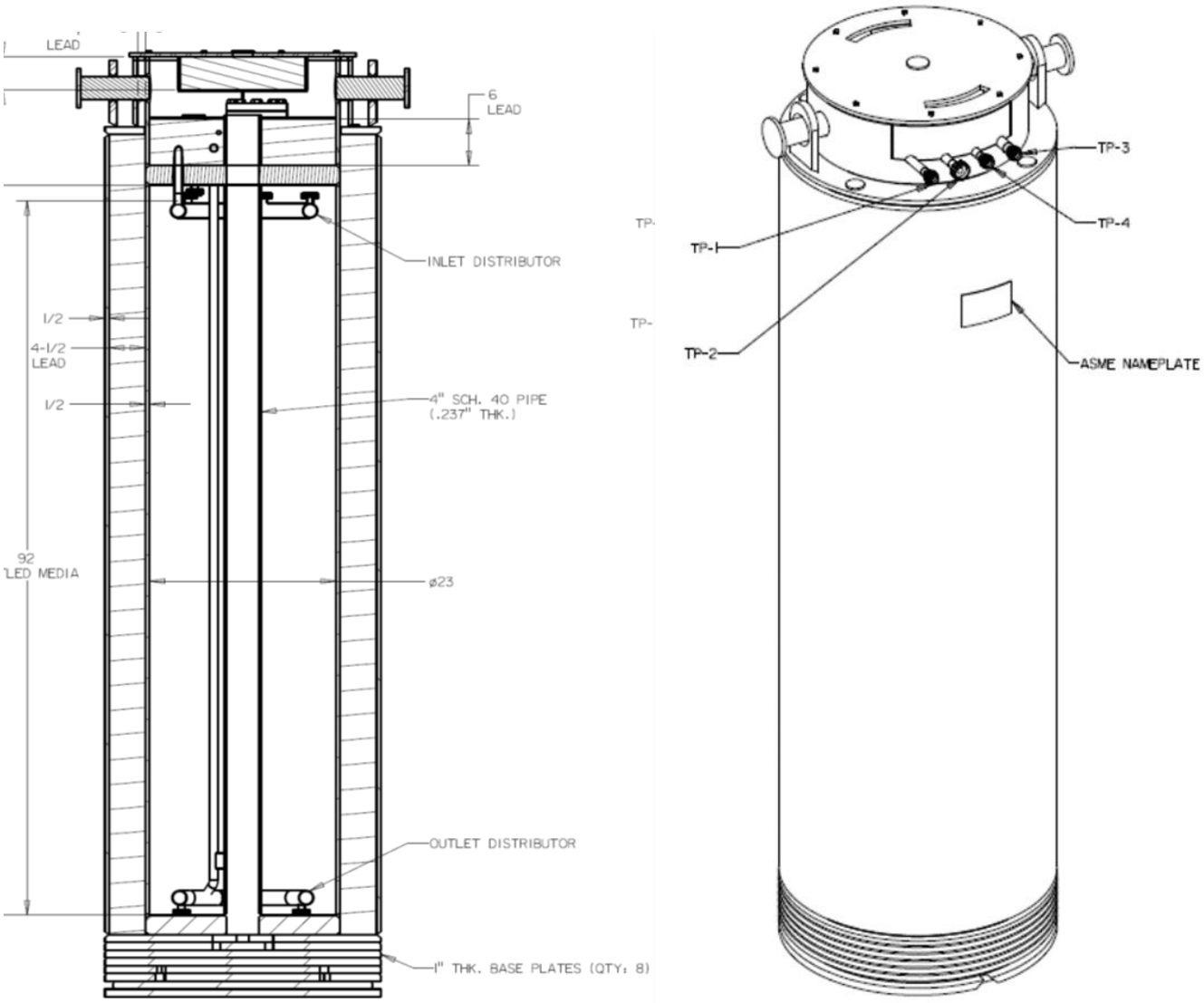

Figure 6: TSCR Ion Exchange Column IXC-150 (H-14-111250, Sheet 1)

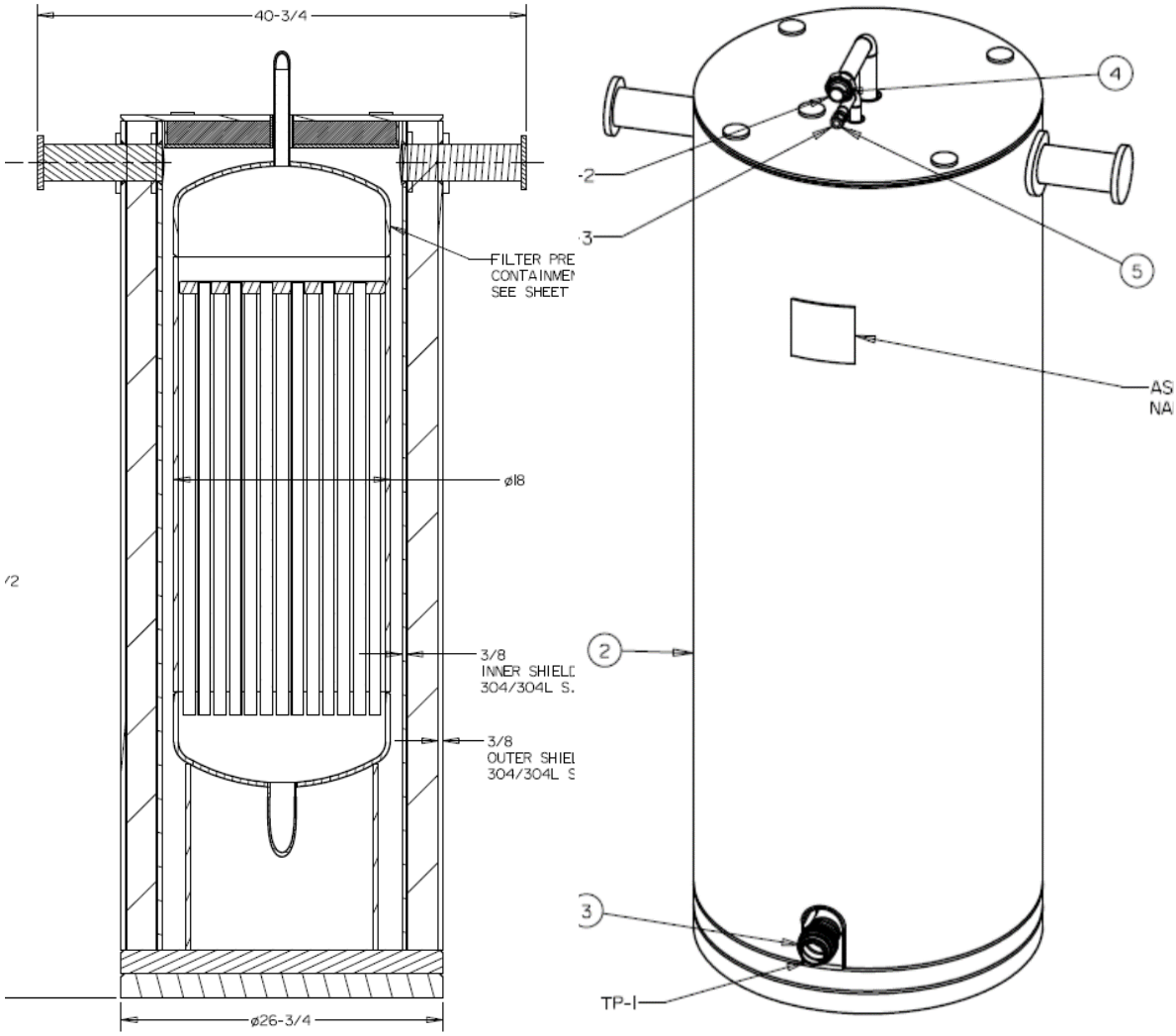

Figure 7: TSCR Filter (H-14-111251, Sheet 1)

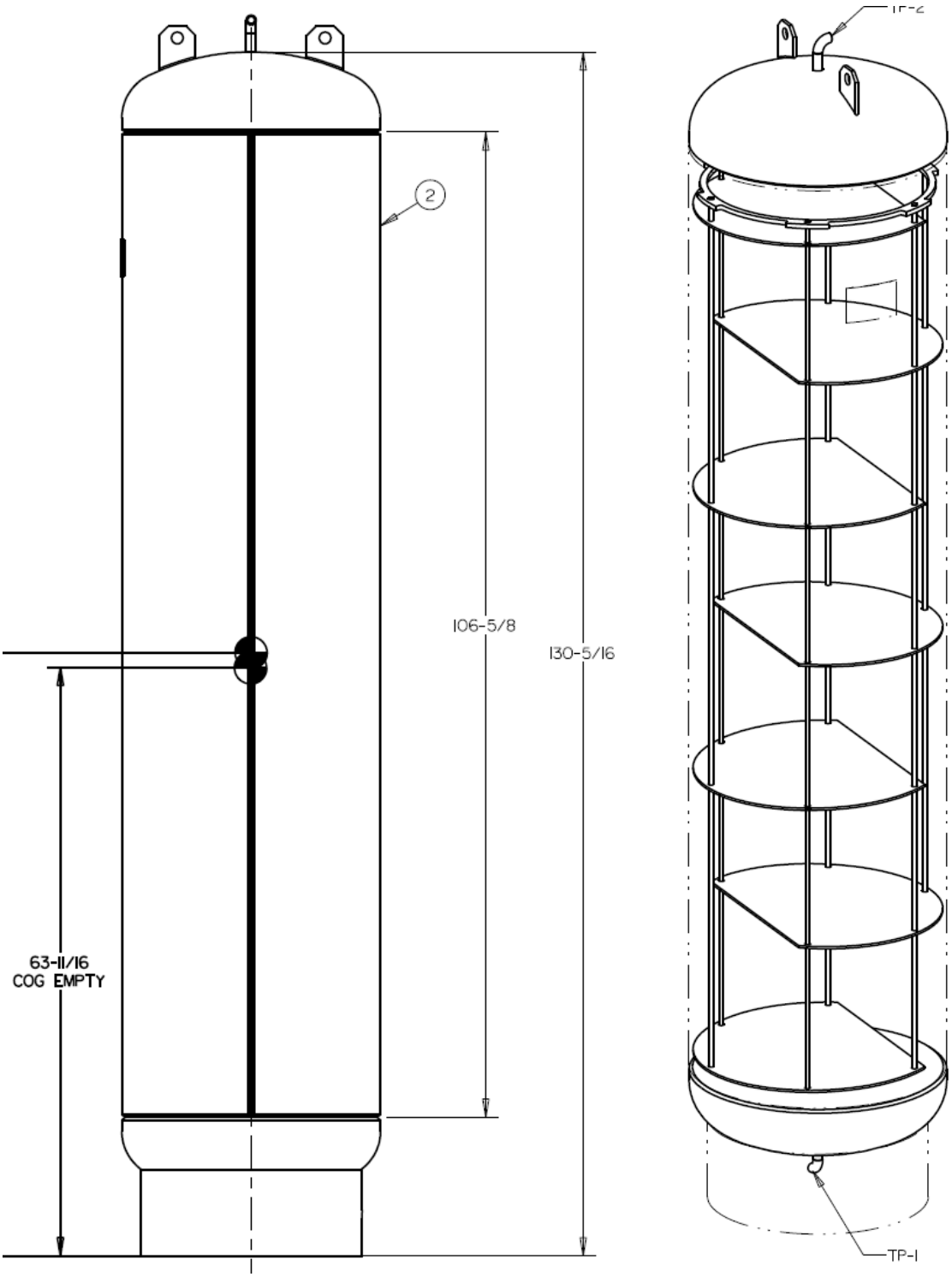

Figure 8: TSCR Delay Tank (H-14-111252, Sheet 1)

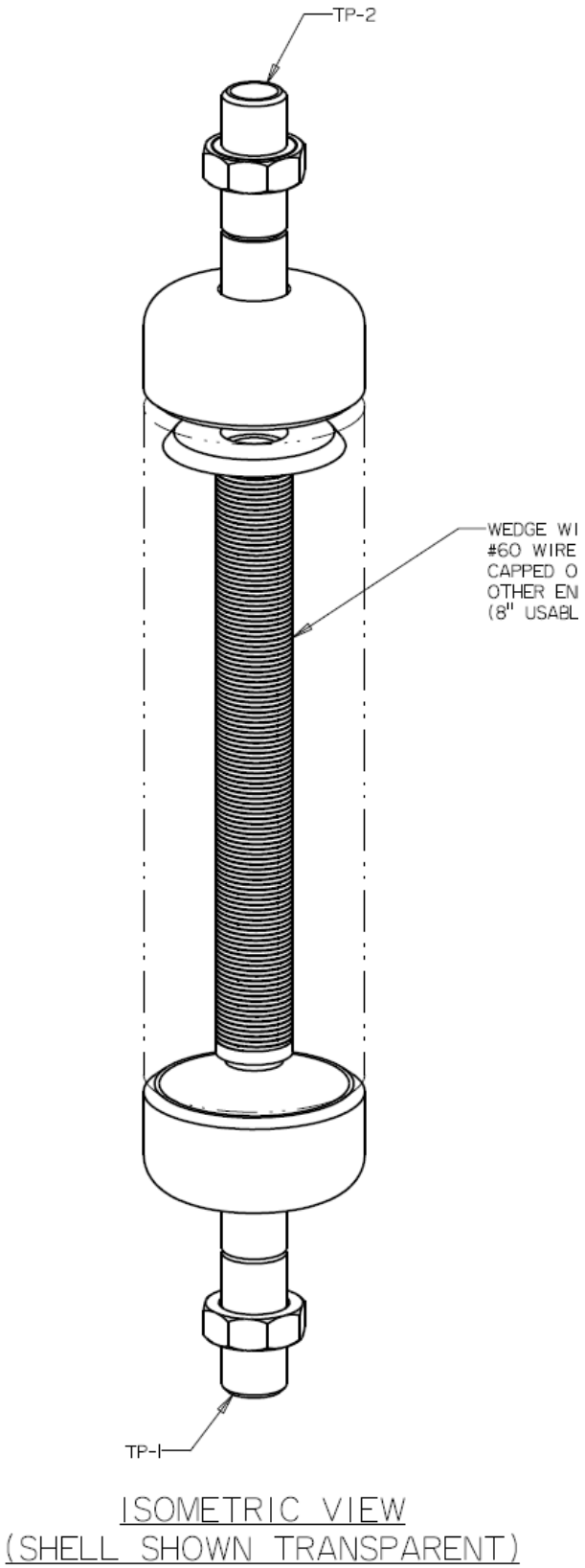

Figure 9: TSCR Media Trap (H-14-111253, Sheet 1)

1.2 DESIGN REVIEW REQUIREMENTS

Many of the TSCR process components required for the storage, treatment, and transfer of dangerous or mixed waste are regulated by WAC 173-303-640(3) requirements. WAC codes require an IQRPE's review of the design of these components prior to installation.

As a basis for the IQRPE certification, a review is performed on a final version of the document design package as prepared and reviewed by WRPS. Documents such as drawings, calculations, Engineering Change Notices (ECNs), Engineering Design Transmittals (EDTs), Technical Evaluations, and specifications included in the design review package that are marked as final, and have signatures of the preparer, checker, and approver, are reviewed by the IQRPE as a completed document. All other documents will be reviewed as preliminary or supportive information.

The IQRPE maintains "independence" at all times. Comments and suggestions by others may be considered by the IQRPE during the preparation of reports and plans, but only the IQRPE can implement changes to the master IQRPE documents.

1.3 DESIGN OVERVIEW FOR TSCR

This Design Assessment Report is prepared for the Owner by an IQRPE to certify that the proposed tank system will have sufficient structural integrity, and is acceptable for storing and treating dangerous waste per WAC 173-303-640(3)(a).

The TSCR Demonstration Project will support the effort to provide a waste feed that meets the LAW acceptance criteria of the WTP to support hot commissioning and early operations of the WTP TSCR uses filtration and IX media to remove both solids and Cs from liquid DST waste. The liquid waste feed into TSCR originates from DST 241-AP-107. Treated TSCR effluent is discharged to DST 241-AP-106. Undissolved solids removed by the filters are backwashed to DST 241-AP-108. The Cs present in the DST waste feed is adsorbed by the ion exchange (IX) media in the ion exchange columns (IXCs). After the IX capacity of an IXC is fully utilized, the IXC is considered to be spent. Spent IXCs are subsequently processed for removal and placement on an interim storage pad. They are replaced in the processing stream with new IXCs containing fresh IX media (RPP-RPT-61030, *Process Operations Description*).

The components within the scope of this IQRPE design assessment for the TSCR Demonstration Project include only those that will be (or have the potential to come into) in direct contact with waste fluids. These components include:

- <u>TSCR Process Enclosure</u>
  - Waste Transfer Piping
  - Filters
  - IXCs
  - Media Trap
  - Delay Tank
  - Secondary Containment System

The following sections list and briefly describe each of the TSCR Demonstration Project components included in this design review.

1.3.1 TSCR Process Enclosure

The TSCR Process Enclosure is a custom-built modular unit containing the main waste processing components for the TSCR Demonstration Project (H-14-111280, *Process Enclosure Frame Weldment*). These components include the waste transfer piping, filters, IXCs, media trap, delay tank and sump (H-14-111244).

1.3.1.1 Waste Transfer Piping

The waste transfer piping inside the TSCR Process Enclosure includes piping used for influent feed, effluent discharge, and the drain and secondary containment system. The process piping is made of 316/316L stainless steel (H-14-111270, *Piping Process Enclosure*).

1.3.1.2 Filters

The filters are utilized to protect the IX media inside the IXCs by removing solids that may be present in the waste stream. Two (2) filters are used, each of which are periodically backwashed. The filters are cylindrical vessels, 18" in diameter, and made of stainless steel. The individual filters are enclosed within a secondary set of outer cylinders that have lead shielding in their annulus area (H-14-111251; H-14-111256, *Fabrication Drawing Filter*; H-14-111268, *Filter Machined Parts*).

1.3.1.3 Ion Exchange Columns

The three (3) IXCs located in the process enclosure contain the crystalline silicotitanante (CST) IX media used to extract the Cesium (Cs) constituent from the waste stream originating from the DST. The columns are arranged in the process flow stream so that one serves as the lead column, another as the lag column, and the third as the polish column. Lead and lag position IXCs are removed and replaced when the effectiveness of their CST ion exchange media loses capacity to extract Cs from the process waste stream. (RPP-RPT-61030). The polish column then assumes lead positon for the next Cs loading cycle.

An IXC is a pressure vessel with a capacity of approximately 162 gallons and is made of both 316/316L and 304/304L stainless steel. The wetted materials on the column are made of 316/316L stainless steel, and the base plates and structural materials are made of 304/304L stainless steel.

The IXC is constructed with integral shielding to reduce the intensity of the radiation emanating from the Cs containing IX media. The cylinder is shielded with 4 ½" of lead, and the base is shielded with a stacked arrangement of eight (8) each, 1" thick stainless steel base plates (H-14-111250; H-14-111255, *Fabrication Drawing IXC-150*; H-14-111260, *IXC-150 Top Head Plate Detail*; H-14-111261, *IXC-150 Bottom Head Plate Detail*; H-14-111262, *IXC-150 Inner Vessel Shell Detail*; H-14-111263, *IXC-150 Machined Component Detail*; H-14-111264, *IXC-150 Vent Stack Machined Plate Detail*; DS-1813-00, *TSCR IXC-150 Data Sheet*).

The IXCs are constructed in accordance with RPP-SPEC-61910, *Specification for the Tank-Side Cesium Removal Demonstration Project (Project TD101)*.

1.3.1.4 Media Trap

The media trap serves to capture any CST IX media that may happen to have escaped from the IXCs due to a gross failure of an IXC's internal screen. The media trap body is made of 2 ½" Schedule 40 316/316L stainless steel pipe with 316/316L stainless steel pipe caps and nozzles. It contains an internal wedge wire screening material made of Hastelloy®[1] C-276 material (H-14-111253; H-14-111257, *Fabrication Drawing Media Trap*).

1.3.1.5 Delay Tank

The delay tank holds the treated LAW to allow for the decay of short-lived isotopes. The tank provides approximately one (1) hour of delay. It is 28" in diameter and approximately 130" in height and made from 316/316L stainless steel. It is equipped with a series of internal baffle plates (H-14-111252; H-14-111258, *Fabrication Drawing Delay Tank*).

1.3.1.6 Secondary Containment

The secondary containment system is situated under the process enclosure tank system components and includes a sump located in the base of the process enclosure to collect leaked fluids from within the enclosure. It is equipped with a leak detector and pump to transfer collected liquid out of the sump to DST 241-AP-108 (H-14-111241).

1.4 SCOPE OF IQRPE DESIGN ASSESSMENT

This design assessment includes a comprehensive review of the design package per WAC 173-303-640.

1.4.1 Portions of the TSCR Demonstration Project Included in Scope for IQRPE Certification

Documents included in this design review for the TSCR Demonstration Project include:

- Calculations,
- Procurement Specifications,
- Technical Specifications,
- Design and Fabrication Drawings,
- ECNs
- Piping and Instrumentation Drawings (P&IDs).

A list of documents referenced by the IQRPE as part of this Design Assessment Report is included in Section 4.0.

[1] Hastelloy® is a registered trademark of the Continental Steel & Tube Co.,

1.4.2 Portions of the TSCR Demonstration Project Not Included in Scope for IQRPE Certification

Components that are not within the scope of this IQRPE Design Assessment for the TSCR Demonstration Project include those that will not be in direct contact with waste fluids. These components include:

- Control enclosure
- Ancillary enclosure
- Reagent Tank and Feed System
- Compressed Air System
- HVAC equipment
- Radiological monitoring equipment
- Video equipment
- Electrical power and distribution equipment
- Process control instrumentation
- IXC storage pad

2.0 ASSESSMENT SUMMARY

As described in Section 2.2, systems within the IQRPE scope of this assessment (Section 1.4.1) are adequately designed to prevent failure caused by corrosion or by structural loads imposed by the system's intended service. These conditions are described in more detail below. The system design complies with the applicable requirements of WAC 173-303-640. Design documents that were reviewed as part of this assessment are referenced in Section 4.0.

2.1 CODES, STANDARDS, AND REGULATIONS

The codes, standards, and regulations specifically used during the preparation of this certification are referenced, as necessary, throughout this report. A complete list of applicable references is contained in Section 4.0.

2.2 BASIS OF DESIGN

The primary features of the TSCR Demonstration Project components are presented in Table 1.

Table 1: TSCR Demonstration Project Major Component Features

Equipment	Features
TSCR process enclosure	• Custom-built, modular enclosure. • Contains main waste processing components.
Waste transfer piping	• Situated inside TSCR process enclosure. • Includes piping used for influent feed, effluent discharge, and the drain and sump system.
Filters	• Protect the IX media inside the IXCs by removing any solids that may be present in the waste stream. • Cylindrical vessels, 18" in diameter, made of stainless steel.

Equipment	Features
	• Enclosed within a secondary set of outer cylinders that have lead shielding.
IXCs	• Contain the chemical media used to extract the Cs constituent from the waste stream. • Constructed with integral shielding to reduce the intensity of the radiation. • Removed and replaced when the effectiveness of its media loses capacity to extract Cs.
Media Trap	• Captures any CST IX media that may happen to have escaped from the IXCs due to a gross failure of an internal IXC screen. • Made of 2 ½" Schedule 40 stainless steel pipe and contains internal wedge wire screening.
Delay Tank	• Holds the treated LAW to allow for the decay of short-lived isotopes. • 28" in diameter and approximately 130" in height. • Equipped with a series of internal baffle plates. • Fitted with steel shielding.
Secondary Containment System	• Sump located in the base of the secondary containment to collect leaked fluids. • Equipped with a leak detector and pump to transfer collected liquid.

2.2.1 Structural Design Standards

WAC 173-303-640, *Tank Systems*, requires that an IQRPE certify that the proposed tank system will have sufficient structural integrity and is acceptable for storing and treating dangerous waste. This assessment must show, in accordance with WAC 173-303-640(3)(a), *Design and Installation of New Tank Systems or Components*, that the foundation, structural support, seams, connections, and pressure controls are adequately designed and that the tank system has sufficient structural strength, compatibility with the waste to be stored or treated, and corrosion protection to ensure that it will not collapse, rupture, or fail.

Components of the TSCR system were analyzed and designed in accordance with established structural requirements. Mechanical calculations performed for the piping systems are prepared in accordance with piping code requirements in ASME B31.3- 2016, *Process Piping*. Calculations include the following areas as applicable:

- Pipe wall thickness calculations for pressure.
- Stress calculations for sustained loads due to pressure, dead load, and other sources.
- Stress calculations for displacement, such as thermal loads.
- Stress calculations for occasional loads such as pressure, weight, and earthquake loads.

WAC 173-303, *Dangerous Waste Regulations*, defines backfill requirements to provide structural support to prevent excessive settlement and corrosion. The corrosion assessment is addressed in Section 2.2.2 of this report.

The following activities were conducted in the review of design standards for TSCR:

- Structural design standards, codes, and criteria were reviewed to ensure clear and specific references.
- Structural calculations were reviewed as listed in Section 4.0.

The IQRPE has reviewed available design package information to ensure that the following activities have been incorporated into the technical specifications:

- Structural calculations are provided for the TSCR Demonstration Project components (RPP-CALC-62464, *TSCR Process Enclosure Structural/Lifting Calculation*).
- Calculations of thickness account for the assumed corrosion/erosion rate (RPP-CALC-62577, *ASME B31.3 Analysis of TSCR Process Piping*).
- Seismic considerations appropriate for the risk zone are included in the structural calculations (RPP-CALC-62484, *TSCR Delay Tank (POR655-WP-TK-550) Pressure Vessel Code, Nozzle Load, & Seismic Calculation*).
- Foundations are deep enough in the ground to eliminate frost heave per the requirements of WAC 173-303-640(3)(a)(v)(C). New equipment is either attached to existing tank structures or designed to accommodate frost heave.
- Adequate freeze protection is provided as a result of the enclosure having been provided with a heating system.

The information below highlights the IQRPE structural design standard review for the relevant TSCR Demonstration Project components and also identifies any specific exceptions to this IQRPE certification as they relate to the structural review.

2.2.1.1 TSCR Process Enclosure

The TSCR Process Enclosure is a modular unit of a temporary nature that will be situated outdoors and will be anchored to a concrete slab installed at grade level to the adjacent ground surface. A separate foundation will not be required. (NOTE: The design details for the enclosure slab and anchorage details will be covered under the design scope associated with the TSCR Tank Farm Upgrades Project.)

All components installed inside of the temperature-controlled TSCR Process Enclosure are not in contact with the soil and are protected from freezing temperatures. The nature and location of the enclosure does not introduce any structural concerns related to freeze protection of piping, frost heaving of foundations, and back fill requirements to provide structural support to prevent excessive settlement and corrosion.

The enclosure is subjected to wind, snow, and seismic loads. RPP-CALC-62464, evaluated the structural design of the TSCR Process Enclosure. The analysis was performed in accordance with relevant standards that included those established in ASCE 7-10, *Minimum Design Loads for Buildings and Other Structures* and ASME Boiler and Pressure Vessel Code Section II (BPVC-II), Materials, Parts C and D.

The structural components were analyzed to verify their adequacy in withstanding forces developed during all-natural hazards and for the lifting loads imposed on the enclosure. The structural members of the enclosure were determined to be adequate to withstand the specified natural phenomena hazards and also able to maintain structural integrity under all design conditions for worst case loading. The members have sufficient design strength to enable the enclosure to be lifted under lifting conditions that require all equipment installed inside the enclosure to be empty and without the IXCs and filter housings being present in the enclosure.

All structural carbon and stainless steel components are welded in accordance with AWS D1.1, *Structural Welding Code - Steel* or AWS D1.6, *Structural Welding Code - Stainless Steel*, as applicable (H-14-111280).

2.2.1.2 Waste Transfer Piping

The piping components in the enclosure are built and inspected per ASME B31.3 for the category of normal fluid service (H-14-111270, *Piping Process Enclosure*). The piping was evaluated for its adequacy relative to dead weight, seismic, and other design loads. The ASME B31.3 evaluation took into account the structural properties of the EPDM flexible hoses used within the enclosure. The hose properties included values for axial, shear, torsional and bending stiffness. The evaluation determined that the design of the TSCR piping and piping components in the TSCR enclosure meet the requirements of ASME B31.3, and NDC-2 requirements for gravity, thermal, and seismic loading (RPP-CALC-62577).

2.2.1.3 Filters

The TSCR filters, which are shielded pressure vessels, are one of the major components in the TSCR Process Enclosure. The filter's lifting trunnions, and associated members in the load path during lifting conditions, were evaluated for their structural integrity. The evaluation concluded that the filter's lifting trunnions and their welds, along with load bearing components consisting of the inner and outer shells, reinforcement pads, and top and bottom plates, were all adequate to accommodate the specified design loading conditions (RPP-CALC-62473, TSCR *Filter Lifting Calculation*). The design of the filter was evaluated and determined to have met NDC-2 requirements, as well as ASME Section VIII Division 1 code requirements, including those related to seismic loadings (RPP-CALC-62472, *TSCR Filter* (POR655-WP-FLT-325A/B) Pressure Vessel Code, Nozzle Load, & Seismic Calculation).

2.2.1.4 Ion Exchange Columns

The IXCs are consumable components and only of interest to the scope of this assessment during the time they are actually in service within the process enclosure and involved with the processing of tank waste. After the IXCs are spent and valved out of service prior to their removal from the enclosure, they are no longer within the assessment scope. Neither fresh nor spent IXCs are within review scope. Therefore, the structural evaluations performed on the IXC as part of RPP-CALC-62466, *IXC-150 Lifting and Attachment Calculation*, and RPP-CALC-62572, *IXC-150 Drop Analysis*, were not considered relevant to this review.

2.2.1.5 Media Trap

The media trap is a small device made of 2 ½" Schedule 40 stainless steel pipe. It was built in accordance with ASME B31.3. All welds were required to be 100% visually inspected to ASME B31.3 normal fluid service criteria (H-14-111253; H-14-111257).

2.2.1.6 Delay Tank

The design of the delay tank was evaluated and determined to have met NDC-1 requirements as well as ASME BPVC Section VIII Division 1 code requirements, including those related to seismic loadings (RPP-CALC-62484).

2.2.1.7 Secondary Containment System

The structural design of the TSCR process enclosure's secondary containment system was evaluated to ensure the stresses in the secondary containment plates and welds were adequate to withstand pressure and weight loads created by a fluid-filled containment system. The stresses in the secondary containment plates and welds of the sump were determined to be less than allowable stresses and thus the design was found to be adequate (RPP-CALC-62500, *Process Enclosure Secondary Containment Sizing Calculation*).

2.2.1.8 Structural Design Exceptions

Based on the above review, there are no IQRPE certification exceptions to the structural design of the components used for the TSCR system.

The IQRPE concurs that this structural design meets the requirements of WAC 173-303-640.

2.2.2 Waste Compatibility

Regulations located in WAC 173-303-640(3)(a) require tank systems be compatible with the wastes stored, treated, transported or otherwise handled. The compatibility of the TSCRs components with waste stream products was evaluated.

RPP-RPT-61282, *Materials of Construction Evaluation* evaluated both the metallic and non-metallic materials used in the process enclosure for the normal processing conditions of the TSCR system over a 5-year design life. Both types of materials used for the primary confinement of tank waste supernatant in the TSCR system were selected to meet the requirements of RPP-SPEC-61910.

Metallic materials were selected for their performance in contact with waste under normal processing conditions. In accordance with RPP-SPEC-61910, all metallic piping and tubing in contact with tank waste is 304 or 316 stainless steel. Similarly, all pressure vessels and waste processing components designed to provide primary confinement of waste supernatant are constructed of dual certified 316/316L stainless steel (Table 2).

Table 2. Metallic Materials in Contact with Tank Waste

Component Type	Metallic Material
Air Operated Valves (AOVs)	316 SS
Delay Tank	316/316L SS
Filters	316/316L SS
IXCs	316/316L SS
Media Trap	316/316L SS
Piping	304/304L; 316/316L SS
Pressure Safety Valves (PSVs)	316 SS
Non-AOV Valves	316 SS
Sump Tank	Epoxy-coated carbon steel

Based on tank waste processing experience at Hanford, 300-series stainless steel is adequate for service. Non-metallic materials were also selected for their performance in contact with waste supernatant and radiation resistance considering the 5-year design life of the TSCR System. Table 3 presents the nonmetallic materials in contact with waste, which include EPDM (Ethylene Propylene Diene Monomer) and Ultra-high Molecular Weight Polyethylene (UHMWPE).

Table 3. Non-Metallic Materials for Tank Waste-contacting Components

Non-Metallic Material	Component or Instrument
EPDM	Flange Gaskets, O-rings
EPDM (with fully encapsulated reinforcement)	Hose
LineBacker (EPDM seals in a supporting ring made of woven glass fabric combined with non-brominated epoxy media)	Flange Gaskets
UHMWPE	AOVs, Valves (Seats and Seals)
Blue Gard[2] 3700	Flange Gaskets
MACROPOXY® 646N	Carbon Steel Coatings

Non-metallic materials not in contact with tank waste were selected based on their chemical compatibility and radiation resistance and were evaluated in RPP-RPT-61282 for compatibility with tank waste.

The Process Enclosure Sump is not intended for normal operations and will only be exposed to process fluids (i.e., tank waste supernatant, 0.1M NaOH and softened water) under off-normal conditions. It is constructed of carbon steel and coated with a waste-compatible polyamide epoxy, MACROPOXY 646N. MACROPOXY 646N is chemically resistant to the sodium form of OH^-, NO_3^-, NO_2^-, SO_4^{-2}, Cl^-, and F^- at the design basis maximum temperature of the TSCR waste feed (115 °F). Chemical resistance is tested for both spot resistance (ASTM D1308) and immersion (ASTM D870 and ASTM D6943). MACROPOXY 646N is formulated and manufactured for nuclear applications, applicable ASTM standards for chemical and radiation resistance. All TSCR system process piping and components in contact with tank waste supernatant are contained in the process enclosure. The process enclosure itself provides secondary containment. Both the metallic

[2] Blue Gard is a registered trademark of Garlock Inc.

and nonmetallic materials used for the TSCRs components were determined to be suitable for their intended applications.

2.2.3 Corrosion Analysis

The proper selection of materials of construction and corrosion/erosion allowances are important for safety functions as required per RPP-SPEC-61910. The design permits a corrosion-erosion allowance for the austenitic stainless steel piping and carbon steel piping by specifying 0.2 mils per year for the expected service life of the system (RPP-SPEC-61910).

2.2.4 Anticipated Chemistry and Controls

The TSCR system handles four (4) primary fluids and compressed air (service and instrument air) during operation. The primary fluids are: 1) waste, 2) reagent water, 3) sodium hydroxide, both concentrated and diluted solutions, and 4) softened water. Reagent water, sodium hydroxide, and softened water are only in scope when in the TSCR enclosure. Under normal processing conditions, the TSCR System experiences the following conditions:

1. Filled with waste supernatant (pH ≥ 13),
2. Filled with dilute sodium hydroxide (pH of 13),
3. Rinsed with softened water (pH of ~9 when accounting for residual sodium hydroxide), and
4. Bulk dewatered (service air is used to push fluid from piping and vessels).

The waste feed is the predominant fluid considered during materials selection because the tank waste supernatant contains concentrations of halogen ions (chloride and fluoride) that far exceed the concentrations in the reagent/chemical system. Physical characteristics of the waste feed derived from RPP-RPT-61282 are presented in Table 4, and average concentrations of key chemical components present in the waste feed are presented in Table 5.

Table 4. Select Physical Characteristics of Waste Feed

Parameter	Unit	Nominal	Value Range
Density	g/mL	1.27	1-1.35
Viscosity	cP	3.7	1-8
Solids Concentration	ppm	200	0-15,000
Waste Temperature	°C	25	20-35

Table 5. Select Chemical Components of Waste Feed

Component	Unit	Liquid Phase	Solid Phase
Cl^-	gmole/L	7.94E-02	2.56E-05
F^-	gmole/L	5.29E-02	2.95E-04
NO_2^-	gmole/L	1.12E+00	3.41E-04
NO_3^-	gmole/L	1.64E+00	4.67E-04
OH^-	gmole/L	1.35E+00	4.23E-04
SO_4^{-2}	gmole/L	4.63E-02	5.62E-05

The normal operating temperature for all piping and equipment in waste service during normal operations is between 20 and 35 °C, and the pH of the waste is ~14 based on the hydroxide [OH^-] concentration.

2.2.4.1 Compatibility Exceptions

Based on the above review, there are no IQRPE certification exceptions to the anticipated waste compatibility or corrosion issues with the equipment materials used for the TSCR Demonstration Project that may come into contact with the liquid waste stream.

2.2.5 Pressure Control System

WAC 173-303-640 requires that an IQRPE certify that the proposed tank system has been designed with appropriate pressure control systems. The piping components of the TSCR Demonstration Project were evaluated for pressure control issues.

The TSCR Demonstration Project utilizes an inlet flow control valve, component WP-FCV-306 (H-14-024857, Sheet 6, *TSCR P&ID Feed*), and an outlet pressure control valve component WP-PCV-557 (H-14-024857, Sheet 10, *TSCR P&ID Effluent Components*), to control the flow of waste liquid through the TSCR system. The design of these two valves was evaluated to assure that they were sized appropriately to provide 5 gpm and 50 psig back pressure to the TSCR system (RPP-CALC-62574, *Tank Side Cesium Removal Process System Flow Analysis*)

2.2.5.1 TSCR Process Enclosure - Waste Transfer Piping

All steel waste transfer piping components within the TSCR Demonstration Project enclosure were built and inspected per ASME B31.3, for the category of normal fluid service (H-14-111270). The piping in the enclosure was evaluated for design adequacy as specified in ASME B31.3. The evaluation determined that the design of the TSCR piping and piping components in the TSCR Demonstration Project Enclosure meet the requirements of ASME B31.3, *Process Piping* and NDC-2 requirements (RPP-CALC-62577.

All piping and components within the TSCR process enclosure were evaluated to determine if internal transient pressures and forces due to hydraulic transient loads were within the ranges allowed by ASME B31.3. Some TSCR operations affecting the closure times of four (4) different valves in general service piping systems were found to have the potential to produce transient pressures in excess of the values allowed by ASME B31.3. It was recommended that the valves in question be modified to provide a minimum full open to full close time of six (6) seconds. However, because the valves were identified as having a minimum closure time of six (6) seconds per RPP-RPT-61220, *Tank Side Cesium Removal (TSCR) Control Logic Narrative*, they were subsequently determined to be in compliance with the allowable values of ASME B31.3. TSCR system operations were not found to cause transient pressures in excess of those allowed by ASME B31.3 (RPP-CALC-62576, *Tank Side Cesium Removal Unit Hydraulic Transient Analysis*).

2.2.5.2 Filters

The two (2) stainless steel TSCR filters, components WP-FLT-325A and WP-FLT-325B, are shielded pressure vessels constructed in accordance with ASME BPVC Section VIII Division 1

code requirements (RPP-CALC-62472). The TSCR filter vessels are hydrostatically tested at 585 psi, they have a design working pressure of 400 psi and a design working temperature of 180 °F (H-14-111256). The TSCR filters are protected from over pressurization with pressure relief valves, components WP-PSV-325A and WP-PSV-325B, for the individual filters, respectively. The valves have a 400 psi set point (H-14-024857, Sheet 7) and were sized in accordance with RPP-CALC-62495, *Pressure Relief Device Calculation*. An evaluation was performed to determine if a fatigue analysis would be needed for the filters per the guidance provided in ASME B&PV Section VIII, Div.2 *Rules for Construction of Pressure Vessels*. It was determined that the provisions of the ASME code were met by the filter design and a detailed fatigue analysis would not be required for the design conditions evaluated. (RPP-CALC-62478, *Filter* (*POR655-WP-FLT-325A/B) Fatigue Evaluation: Screening Criteria for Fatigue Analysis*).

2.2.5.3 Ion Exchange Columns

The three (3) stainless steel IXCs, components WP-IX-400A, WP-IX-400B and WP-IX-400C, are shielded pressure vessels constructed in accordance with ASME BPVC Section VIII Division 1 code requirements (RPP-CALC-62465, *TSCR IXC-150 (POR655-WP-IX-400A/B/C) ASME Section VIII Division 1, 2017 Edition Code Calculation*). The three (3) TSCR IXCs are hydrostatically tested at 585 psi. They have a design working pressure of 400 psi and a design working temperature of 180 °F (H-14-111255). The IXCs are protected from over pressurization with pressure relief valves, components WP-PSV-400A, WP-PSV-400B and WP-PSV-400C for the individual IXCs, respectively. The valves have a 400 psi set point (H-14-024857, Sheet 8, *TSCR P&ID IXC Positions A & B*; H-14-024857, Sheet 9, *TSCR P&ID IXC Position C*) and were sized in accordance with RPP-CALC-62495. A transient load analysis was performed for a ¾" vertical riser on the IXC to determine the maximum static force and maximum pressure sustainable by the component due to a fluid transient load originating downstream of the IXC and entering the IXC vessel through the outlet piping. The maximum pressure that could be sustained as a result of the transient did not exceed the allowable stress for the component (RPP-CALC-63127, *Transient Evaluation of IXC-150 Outlet Piping*). An evaluation was performed to determine if a fatigue analysis would be needed for the IXCs per the guidance provided in ASME B&PV Section VIII, Div.2 *Rules for Construction of Pressure Vessels*. It was determined that all components of IXC-150 met the screening criterial for exclusion of a fatigue analysis as specified in the ASME code and no additional fatigue analysis would need to be performed (RPP-CALC-62471, *Ion Exchange Column* (*IXC-150) Fatigue Evaluation: Rules to Determine Need for Fatigue Analysis*).

2.2.5.4 Media Trap

The media trap serves to capture any CST media that may happen to have escaped from the IXCs. It is made of 2 ½" Schedule 40 stainless steel. The process piping of the media trap has a design pressure of 400 psig and is required to undergo hydrostatic testing at a pressure of 600 psig. The piping is required to be fabricated, welded, inspected, and tested in accordance with ASME B31.3 for the category of normal fluid service (H-14-111253 and H-14-111257).

2.2.5.5 Delay Tank

The stainless steel delay tank, component WP-TK-550, was constructed in accordance with ASME BPVC Section VIII Division 1 code requirements (RPP-CALC-62484). The tank is hydrostatically

tested at 585 psi. It has a design working pressure of 400 psi and a design working temperature of 180 °F (H-14-111258). The delay tank is protected from over pressurization with a pressure relief valve, component WP-PSV-550, with a 400 psig set point (H-14-024857, Sheet 10). The pressure relief valve was sized in accordance with RPP-CALC-62495. An evaluation was performed to determine if a fatigue analysis would be needed for the delay tank per the guidance provided in ASME B&PV Section VIII, Div.2 *Rules for Construction of Pressure Vessels*. It was determined that all components of the delay tank met the screening criterial for exclusion of a fatigue analysis as specified in the ASME code and no additional fatigue analysis would need to be performed. (RPP-CALC-62490, *Delay Tank (POR655-WP-TK-550) Fatigue Evaluation: Screening Criteria for Fatigue Analysis*).

2.2.5.6 Pressure Control System Exceptions

Based on the above review, there are no IQRPE Certification exceptions to the pressure control system review. The IQRPE concludes that the appropriate pressure control considerations for the TSCR Demonstration Project have been made.

The IQRPE concurs that this design basis meets the requirements of WAC 173-303-640.

2.2.6 Secondary Containment System

WAC 173-303-640 requires that an IQRPE certify that the proposed tank system has been designed with an appropriate secondary containment system. Secondary containment for tank systems that store, accumulate, or treat dangerous waste must be designed and installed to meet the requirements of WAC 173-303-640(4)(b).

The secondary containment system, including the sump, is situated underneath all of the process components in the process enclosure to collect leaked fluids from within the enclosure. The drip pan of the sump has a capacity of approximately 383 gallons (RPP-CALC-62500) and is equipped with a leak detector and a pump to transfer collected liquid out of the sump (H-14-111241). A time interval of 10 minutes was considered to be a practical limit for a requirement to empty the sump and associated regent inflow. Ten minutes was deemed to provide sufficient time to transfer leaked waste to DST 241-AP-108 at a reasonable rate while also enabling the sump pump to be kept to a reasonable physical size. It was determined that a pump rated for a least 39 gpm, with a hydraulic horsepower of 0.17 hp, would be required to meet the criteria (RPP-CALC-62504, *TSCR Sump Pump Sizing*).

Any leakage originating from inside the enclosure is routed to the secondary containment and then pumped to DST 241-AP-108. All backwash, blowdown, displacement, and rinses are directed to 241-AP-108 via the drain header. The process vent is routed to the headspace of 241-AP-108 (RPP-RPT-61030).

The key components of the TSCR enclosure's secondary containment include the epoxy coated drip pan, sump leak detector and the sump pump (RPP-CALC-62500).

Leak detector WP-LDE-618 is installed in the sump for monitoring the presence of waste liquids (H-14-024857, Sheet 6).

Conclusions from the review of the design standards for TSCR are summarized below:

- The TSCR process enclosure sump is designed to prevent any migration of wastes out of the secondary containment system to the soil, groundwater, or surface water at any time during the use of the tank system.
- The TSCR process enclosure sump is constructed of materials that are compatible with the wastes to be placed in the system.
- The system has been specified to have sufficient strength to withstand stresses due to static head during a release, pressure gradients, climatic conditions, and other stresses resulting from daily operations.
- A leak-detection system for liquids has been provided.
- The system is sloped or otherwise designed or operated to drain and remove liquids resulting from leaks and spills.

The IQRPE concludes that the appropriate secondary containment considerations have been made for the TSCR process enclosure.

2.2.6.1 Secondary Containment System Exceptions

Because secondary containment is incorporated into the TSCR process enclosure design, there are no exceptions to the IQRPE certification of the secondary containment review assessment.

The IQRPE concurs that this design basis meets the requirements of WAC 173-303-640.

2.2.7 Ancillary Equipment Design

WAC 173-303-640 requires that an IQRPE certify that the proposed tank system has been designed with appropriate ancillary equipment in accordance with the requirements of WAC 173-303-640(3)(f) and (4)(f). WAC 173-303-040 defines "Ancillary Equipment" as any device including, but not limited to, such devices as piping, fittings, flanges, valves, and pumps, that is used to distribute, meter, or control the flow of dangerous waste from its point of generation to a storage or treatment tank(s), between dangerous waste storage and treatment tanks to a point of disposal on-site, or to a point of shipment for disposal off-site. A review of the ancillary equipment design is normally part of the IQRPE review. The scope of this review includes components listed as in-scope in Section 1.3 and as described in the review sections above. Piping, fittings, flanges, valves, and pumps have been evaluated by the IQRPE throughout this report, which includes all ancillary equipment in-scope for this Design Assessment. No other ancillary equipment was identified.

2.2.7.1 Ancillary Equipment Design Exceptions

Based on the above review, there are no IQRPE certification exceptions to the ancillary equipment design review.

The IQRPE concurs that this design basis meets the requirements of WAC 173-303-640.

2.2.8 P&ID Review

The P&ID details for the waste containing components of the TSCR Process Enclosure are depicted on: H-14-024857, Sheet 6; H-14-024857, Sheet 7; H-14-024857, Sheet 8; H-14-024857, Sheet 9,; H-14-024857, Sheet 10; and H-14-024857, Sheet 13, *TSCR P&ID Legend*.

The IQRPE concludes that the appropriate P&ID review has been made.

2.2.9 Corrosion Assessment

WAC 173-303-640 requires an IQRPE corrosion assessment of only the external portion of the primary containment that is in direct contact with soil or water. All TSCR components are situated in the temperature-controlled enclosure and will not be in external contact with either soil or water.

The TSCR Demonstration Project is a temporary installation. Its design life is either five (5) years or until the time it has completed the treatment of five (5) million gallons of tank waste (RPP-RPT-61233), whichever comes first.

The IQRPE concludes that appropriate corrosion considerations have been made for the design of the TSCR Demonstration Project.

2.2.9.1 Corrosion Assessment Exceptions

Based on the above requirements, there are no IQRPE certification exceptions to the corrosion assessment review with the materials.

The IQRPE concurs that this design basis meets the requirements of WAC 173-303-640.

3.0 DESIGN REVIEW ASSESSMENT CERTIFICATIONS

The TSCR Demonstration Project design, as previously described, has been reviewed by the IQRPE and was assessed to be in compliance with the applicable sections of WAC 173-303-640. These results are based on a review of the applicable codes, standards, and documents.

The following individuals participated in preparation of this Design Assessment Report:

Independent Qualified Registered Professional Engineer Paul M. Giever

- P.E., Civil, Structural Engineering, License No. 28084

Registered Professional Engineers

Alexander P. Butterfield

- P.E., Mechanical Engineering, License No. 52255

Andrew S. Klein

- P.E., Chemical, Fire Protection, License No. 47831

Michel J. Langevin

- P.E., Mechanical Engineering, License No. 23759

BS Degreed Engineer

Nathaniel R. Weinman

- E.I.T., Mechanical Engineering, Enrollment Number E-11818

The certification below is in accordance with the requirements of WAC 173-303-810(13)(a).

Report Lead IQRPE:

WAC 173-303-810(13)(a)

I certify under penalty of the law that this document and all attachments were prepared under my direction or supervision in accordance with a system designed to assure that qualified personnel properly gather and evaluate the information submitted. Based on my inquiry of the person or persons who manage the system, or those persons directly responsible for gathering the information, the information submitted is, to the best of my knowledge and belief, true, accurate, and complete. I am aware that there are significant penalties for submitting false information, including the possibility of fine and imprisonment for knowing violations.

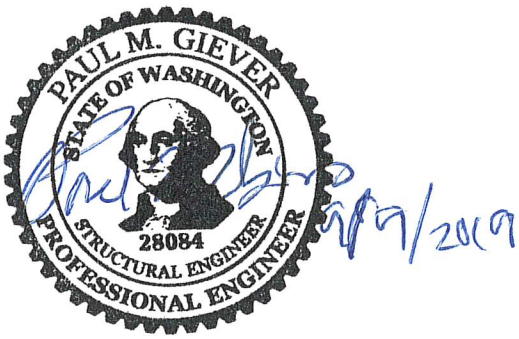

Report Reviewed by:

Paul M. Giever, PE
Independent Qualified Registered Professional Engineer

September 9, 2019
Date

4.0 REFERENCES

ASCE/SEI 7-10, 2010, *Minimum Design Loads for Buildings and Other Structures*, American Society of Civil Engineers, Reston, VA.

ASME B&PV, 2017, *Boiler and Pressure Vessel Code Section II, Parts C & D*, American Society of Mechanical Engineers, New York, New York.

ASME B&PV, 2017, *Rules for Construction of Pressure Vessels, Section VIII, Div 2*, American Society of Mechanical Engineers, New York, New York.

ASME B31.3, 2016, *Process Piping*, American Society of Mechanical Engineers, New York, New York.

AWS D1.1/D1.1M, 2015, *Structural Welding Code - Steel*, American Welding Society, Miami, Florida.

AWS D1.6/D1.6M, 2017, *Structural Welding Code - Stainless Steel*, American Welding Society, Miami, Florida.

DS-1813-00, 2019, *TSCR IXC-150 Data Sheet*, Rev. 1, Avantech Inc.

H-14-024857, 2019, Sheet 1, *TSCR P&ID Legend*, Rev. 2, Washington River Protection Solutions, LLC, Richland, Washington.

H-14-024857, 2019, Sheet 10, *TSCR P&ID Effluent Components*, Rev. 2, Washington River Protection Solutions, LLC, Richland, Washington.

H-14-024857, 2019, Sheet 6, *TSCR P&ID Feed*, Rev. 2, Washington River Protection Solutions, LLC, Richland, Washington.

H-14-024857, 2019, Sheet 7, *TSCR P&ID Filtration*, Rev. 2, Washington River Protection Solutions, LLC, Richland, Washington.

H-14-024857, 2019, Sheet 8, *TSCR P&ID IXC Positions A & B*, Rev. 2, Washington River Protection Solutions, LLC, Richland, Washington.

H-14-024857, 2019, Sheet 9, *TSCR P&ID IXC Position C*, Rev. 2, Washington River Protection Solutions, LLC, Richland, Washington.

H-14-111241, 2019, Sheet 1, *TSCR Block Flow Diagram*, Rev. 0, Washington River Protection Solutions, LLC, Richland, Washington.

H-14-111244, 2019, Sheet 10, *General Arrangement Process Enclosure Hazardous Area*, Rev. 2, Washington River Protection Solutions, LLC, Richland, Washington.

H-14-111244, 2019, Sheet 11, *General Arrangement Process Enclosure Hazardous Area*, Rev. 2, Washington River Protection Solutions, LLC, Richland, Washington.

H-14-111244, 2019, Sheet 12, *General Arrangement Process Enclosure Hazardous Area*, Rev. 2, Washington River Protection Solutions, LLC, Richland, Washington.

H-14-111244, 2019, Sheet 5, *General Arrangement Process Enclosure Equipment Layout*, Rev. 2, Washington River Protection Solutions, LLC, Richland, Washington.

H-14-111244, 2019, Sheet 6, *General Arrangement Process Enclosure Equipment Layout*, Rev. 2, Washington River Protection Solutions, LLC, Richland, Washington.

H-14-111244, 2019, Sheet 7, *General Arrangement Process Enclosure Equipment Layout*, Rev. 2, Washington River Protection Solutions, LLC, Richland, Washington.

H-14-111244, 2019, Sheet 8, *General Arrangement Process Enclosure Center of Gravity*, Rev. 2, Washington River Protection Solutions, LLC, Richland, Washington.

H-14-111244, 2019, Sheet 9, *General Arrangement Process Enclosure Sump and Drain Details*, Rev. 2, Washington River Protection Solutions, LLC, Richland, Washington.

H-14-111244, 2019, Sheets 1 - 4, *General Arrangement Process Enclosure Equipment Layout*, Rev. 2, Washington River Protection Solutions, LLC, Richland, Washington.

H-14-111250, 2019, Sheet 1, *General Arrangement IXC-150*, Rev. 2, Washington River Protection Solutions, LLC, Richland, Washington.

H-14-111251, 2019, Sheets 1-2, *General Arrangement Filter*, Rev. 2, Washington River Protection Solutions, LLC, Richland, Washington.

H-14-111252, 2019, Sheet 1, *General Arrangement Delay Tank*, Rev. 2, Washington River Protection Solutions, LLC, Richland, Washington.

H-14-111253, 2019, Sheet 1, *General Arrangement Media Trap*, Rev. 2, Washington River Protection Solutions, LLC, Richland, Washington.

H-14-111255, 2019, Sheets 1-12, *Fabrication Drawing IXC-150*, Rev. 1, Washington River Protection Solutions, LLC, Richland, Washington.

H-14-111256, 2019, Sheets 1-5, *Fabrication Drawing Filter*, Rev. 1, Washington River Protection Solutions, LLC, Richland, Washington.

H-14-111257, 2019, Sheet 1, *Fabrication Drawing Media Trap*, Rev. 1, Washington River Protection Solutions, LLC, Richland, Washington.

H-14-111258, 2019, Sheets 1-2, *Fabrication Drawing Delay Tank*, Rev. 1, Washington River Protection Solutions, LLC, Richland, Washington.

H-14-111260, 2019, Sheets 1-3, *IXC-150 Top Head Plate Detail*, Rev. 1, Washington River Protection Solutions, LLC, Richland, Washington.

H-14-111261, 2019, Sheet 1, *IXC-150 Bottom Head Plate Detail*, Rev. 1, Washington River Protection Solutions, LLC, Richland, Washington.

H-14-111262, 2019, Sheet 1, *IXC-150 Inner Vessel Shell Detail*, Rev. 1, Washington River Protection Solutions, LLC, Richland, Washington.

H-14-111263, 2019, Sheets 1-10, *IXC-150 Machined Component Detail*, Rev. 1, Washington River Protection Solutions, LLC, Richland, Washington.

H-14-111264, 2019, Sheets 1-4, *IXC-150 Vent Stack Machined Plate Detail*, Rev. 1, Washington River Protection Solutions, LLC, Richland, Washington.

H-14-111268, 2019, Sheets 1-7, *Filter Machined Parts*, Rev. 1, Washington River Protection Solutions, LLC, Richland, Washington.

H-14-111270, 2019, Sheet 1, *Piping Process Enclosure Treated LAW*, Rev. 1, Washington River Protection Solutions, LLC, Richland, Washington.

H-14-111270, 2019, Sheet 10, *Piping Process Enclosure IXC-400B Vent & Drain*, Rev. 1, Washington River Protection Solutions, LLC, Richland, Washington.

H-14-111270, 2019, Sheet 11, *Piping Process Enclosure IXC-400C Vent & Drain*, Rev. 1, Washington River Protection Solutions, LLC, Richland, Washington.

H-14-111270, 2019, Sheet 12, *Piping Process Enclosure IXC Bypass Lines*, Rev. 1, Washington River Protection Solutions, LLC, Richland, Washington.

H-14-111270, 2019, Sheet 13, *Piping Process Enclosure Media Trap Inlet*, Rev. 1, Washington River Protection Solutions, LLC, Richland, Washington.

H-14-111270, 2019, Sheet 14, *Piping Process Enclosure Delay Tank Inlet/Outlet*, Rev. 1, Washington River Protection Solutions, LLC, Richland, Washington.

H-14-111270, 2019, Sheet 15, *Piping Process Enclosure Filter Backwash*, Rev. 1, Washington River Protection Solutions, LLC, Richland, Washington.

H-14-111270, 2019, Sheet 16, *Piping Process Enclosure Hose Lines*, Rev. 1, Washington River Protection Solutions, LLC, Richland, Washington.

H-14-111270, 2019, Sheet 17, *Piping Process Enclosure Airlock Air & Reagent*, Rev. 1, Washington River Protection Solutions, LLC, Richland, Washington.

H-14-111270, 2019, Sheet 18, *Piping Process Enclosure Reagent Header*, Rev. 1, Washington River Protection Solutions, LLC, Richland, Washington.

H-14-111270, 2019, Sheet 19, *Piping Process Enclosure IXC-400A Sweep Air*, Rev. 1, Washington River Protection Solutions, LLC, Richland, Washington.

H-14-111270, 2019, Sheet 2, *Piping Process Enclosure LAW Feed Inlet*, Rev. 1, Washington River Protection Solutions, LLC, Richland, Washington.

H-14-111270, 2019, Sheet 20, *Piping Process Enclosure IXC-400B Sweep Air*, Rev. 1, Washington River Protection Solutions, LLC, Richland, Washington.

H-14-111270, 2019, Sheet 21, *Piping Process Enclosure IXC-400C Sweep Air*, Rev. 1, Washington River Protection Solutions, LLC, Richland, Washington.

H-14-111270, 2019, Sheet 22, *Piping Process Enclosure Compressed Air Tank*, Rev. 1, Washington River Protection Solutions, LLC, Richland, Washington.

H-14-111270, 2019, Sheet 23, *Piping Process Enclosure Blowdown Drying Air*, Rev. 1, Washington River Protection Solutions, LLC, Richland, Washington.

H-14-111270, 2019, Sheet 24, *Piping Process Enclosure IXC-400A Drying Air*, Rev. 1, Washington River Protection Solutions, LLC, Richland, Washington.

H-14-111270, 2019, Sheet 25, *Piping Process Enclosure IXC-400B Drying Air*, Rev. 1, Washington River Protection Solutions, LLC, Richland, Washington.

H-14-111270, 2019, Sheet 26, *Piping Process Enclosure IXC-400C Drying Air*, Rev. 1, Washington River Protection Solutions, LLC, Richland, Washington.

H-14-111270, 2019, Sheet 27, *Piping Process Enclosure Receiver Tank Inlet*, Rev. 1, Washington River Protection Solutions, LLC, Richland, Washington.

H-14-111270, 2019, Sheet 28, *Piping Process Enclosure Airlock Cabinet Drain*, Rev. 1, Washington River Protection Solutions, LLC, Richland, Washington.

H-14-111270, 2019, Sheet 29, *Piping Process Enclosure Treated LAW Blowdown*, Rev. 1, Washington River Protection Solutions, LLC, Richland, Washington.

H-14-111270, 2019, Sheet 3, *Piping Process Enclosure Drain & Feed Recirc*, Rev. 1, Washington River Protection Solutions, LLC, Richland, Washington.

H-14-111270, 2019, Sheet 30, *Piping Process Enclosure Filter Air & Spray Line*, Rev. 1, Washington River Protection Solutions, LLC, Richland, Washington.

H-14-111270, 2019, Sheet 31, *Piping Process Enclosure Airlock Reagent*, Rev. 1, Washington River Protection Solutions, LLC, Richland, Washington.

H-14-111270, 2019, Sheet 32, *Piping Process Enclosure Airlock Service Air*, Rev. 1, Washington River Protection Solutions, LLC, Richland, Washington.

H-14-111270, 2019, Sheet 33, *Piping Process Enclosure Pressure Relief Lines*, Rev. 1, Washington River Protection Solutions, LLC, Richland, Washington.

H-14-111270, 2019, Sheet 34, *Piping Process Enclosure Pressure Relief Lines*, Rev. 1, Washington River Protection Solutions, LLC, Richland, Washington.

H-14-111270, 2019, Sheet 35, *Piping Process Enclosure Pressure Relief Lines*, Rev. 1, Washington River Protection Solutions, LLC, Richland, Washington.

H-14-111270, 2019, Sheet 36, *Piping Process Enclosure Filter Dirty Side Vent*, Rev. 1, Washington River Protection Solutions, LLC, Richland, Washington.

H-14-111270, 2019, Sheet 4, *Piping Process Enclosure Vent Header*, Rev. 1, Washington River Protection Solutions, LLC, Richland, Washington.

H-14-111270, 2019, Sheet 5, *Piping Process Enclosure IXC Feed*, Rev. 1, Washington River Protection Solutions, LLC, Richland, Washington.

H-14-111270, 2019, Sheet 6, *Piping Process Enclosure IXC-400A Header*, Rev. 1, Washington River Protection Solutions, LLC, Richland, Washington.

H-14-111270, 2019, Sheet 7, *Piping Process Enclosure IXC-400B Header*, Rev. 1, Washington River Protection Solutions, LLC, Richland, Washington.

H-14-111270, 2019, Sheet 8, *Piping Process Enclosure IXC-400C Header*, Rev. 1, Washington River Protection Solutions, LLC, Richland, Washington.

H-14-111270, 2019, Sheet 9, *Piping Process Enclosure IXC-400A Vent & Drain*, Rev. 1, Washington River Protection Solutions, LLC, Richland, Washington.

H-14-111280, 2019, Sheets 1-42, *Process Enclosure Frame Weldment*, Rev. 0, Washington River Protection Solutions, LLC, Richland, Washington.

RPP-CALC-62464, 2019, *TSCR Process Enclosure Structural/Lifting Calculation*, Rev. 0, Washington River Protection Solutions, LLC, Richland, Washington.

RPP-CALC-62465, 2019, *TSCR IXC-150 (POR655-WP-IX-400A/B/C) ASME Section VIII Division 1, 2017 Edition Code Calculation*, Rev. 1, Washington River Protection Solutions, LLC, Richland, Washington.

RPP-CALC-62466, 2019, *IXC-150 Lifting and Attachment Calculation*, Rev. 1, Washington River Protection Solutions, LLC, Richland, Washington.

RPP-CALC-62471, 2019, *Ion Exchange Column* (*IXC-150) Fatigue Evaluation: Rules to Determine Need for Fatigue Analysis*, Rev. 1, Washington River Protection Solutions, LLC, Richland, Washington.

RPP-CALC-62472, 2019, *TSCR Filter (POR655-WP-FLT-325A/B) Pressure Vessel Code, Nozzle Load, & Seismic Calculation*, Rev. 1, Washington River Protection Solutions, LLC, Richland, Washington.

RPP-CALC-62473, 2019, *TSCR Filter Lifting Calculation*, Rev. 0, Washington River Protection Solutions, LLC, Richland, Washington.

RPP-CALC-62478, 2019, *Filter* (*POR655-WP-FLT-325A/B) Fatigue Evaluation: Screening Criteria for Fatigue Analysis*, Rev. 1, Washington River Protection Solutions, LLC, Richland, Washington.

RPP-CALC-62484, 2019, *TSCR Delay Tank (POR655-WP-TK-550) Pressure Vessel Code, Nozzle Load, & Seismic Calculation*, Rev. 1, Washington River Protection Solutions, LLC, Richland, Washington.

RPP-CALC-62490, 2019, *Delay Tank (POR655-WP-TK-550) Fatigue Evaluation: Screening Criteria for Fatigue Analysis*, Rev. 1, Washington River Protection Solutions, LLC, Richland, Washington.

RPP-CALC-62495, 2019, *Pressure Relief Device Calculation*, Rev. 0, Washington River Protection Solutions, LLC, Richland, Washington.

RPP-CALC-62500, 2019, *Process Enclosure Secondary Containment Sizing Calculation*, Rev. 2, Washington River Protection Solutions, LLC, Richland, Washington.

RPP-CALC-62504, 2019, *TSCR Sump Pump Sizing*, Rev. 2, Washington River Protection Solutions, LLC, Richland, Washington.

RPP-CALC-62572, 2019, *IXC-150 Drop Analysis*, Rev. 0, Washington River Protection Solutions, LLC, Richland, Washington.

RPP-CALC-62574, 2019, *Tank Side Cesium Removal Process System Flow Analysis*, Rev. 0, Washington River Protection Solutions, LLC, Richland, Washington.

RPP-CALC-62576, 2019, *Tank Side Cesium Removal Unit Hydraulic Transient Analysis*, Rev. 0, Washington River Protection Solutions, LLC, Richland, Washington.

RPP-CALC-62577, 2019, *ASME B31.3 Analysis of TSCR Process Piping*, Rev. 0, Washington River Protection Solutions, LLC, Richland, Washington.

RPP-CALC-63127, 2019, *Transient Evaluation of IXC-150 Outlet Piping*, Rev. 0, Washington River Protection Solutions, LLC, Richland, Washington.

RPP-RPT-61030, 2019, *Process Operations Description*, Rev. 0, Washington River Protection Solutions, LLC, Richland, Washington.

RPP-RPT-61220, 2019, *Tank Side Cesium Removal (TSCR) Control Logic Narrative*, Rev. 0, Washington River Protection Solutions, LLC, Richland, Washington.

RPP-RPT-61233, 2019, *TSCR Design Review Compliance Matrix*, Rev. 0, Washington River Protection Solutions, LLC, Richland, Washington.

RPP-RPT-61282, 2019, *Materials of Construction Evaluation*, Rev. 0, Washington River Protection Solutions, LLC, Richland, Washington.

RPP-SPEC-61910, 2019, *Specification for the Tank Side Cesium Removal Demonstration Project (Project TD101)*, Rev. 2, Washington River Protection Solutions, LLC, Richland, Washington.

WAC 173-303, *"Dangerous Waste Regulations,"* Washington Administrative Code, as amended.

WAC 173-303-640(3), *"Design and Installation of New Tank Systems or Components,"* Washington Administrative Code, as amended.

WAC 173-303-640, *"Tank Systems,"* Washington Administrative Code, as amended.

WAC 173-303-810(13)(a), *"Certification,"* Washington Administrative Code, as amended.

Washington River Protection Solutions Statement of Work (SOW) No. 314470, 2018, *IQRPE for Tank Side Cesium Removal (TSCR) Design Assessment*, Rev. 0, Washington River Protection Solutions, LLC, Richland, WA.