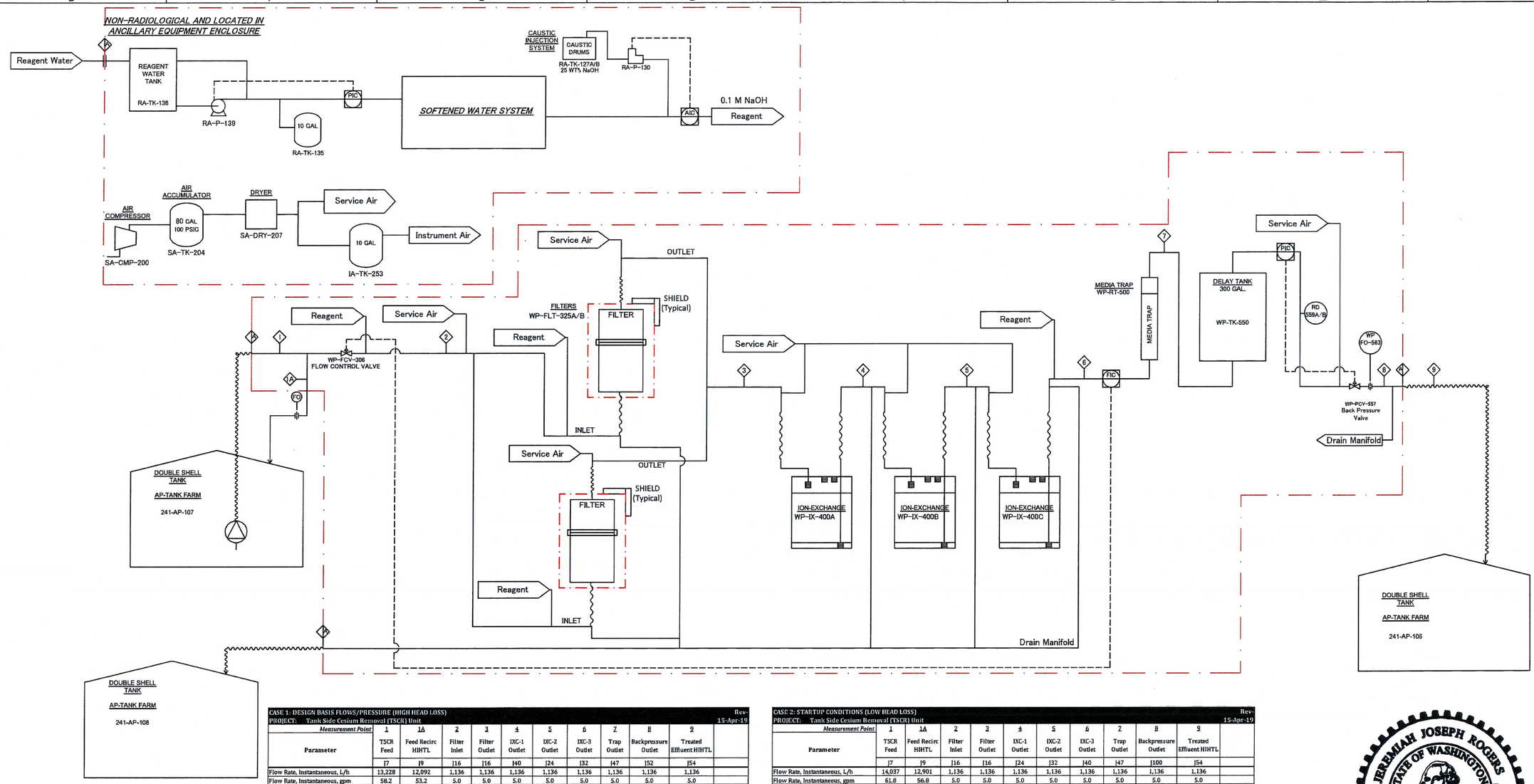

CASE 1: DESIGN BASIS FLOWS/PRESSURE (HIGH HEAD LOSS)											Rev-
PROJECT: Tank Side Cesium Removal (TSCR) Unit											15-Apr-19
Measurement Point	1	1A	2	3	4	5	6	7	8	9	
Parameter	TSCR Feed	Feed Recirc HIHTL	Filter Inlet	Filter Outlet	IXC-1 Outlet	IXC-2 Outlet	IXC-3 Outlet	Trap Outlet	Backpressure Outlet	Treated Effluent HIHTL	
	J7	J9	J16	J16	J40	J24	J32	J47	J52	J54	
Flow Rate, Instantaneous, L/h	13,228	12,092	1,136	1,136	1,136	1,136	1,136	1,136	1,136	1,136	
Flow Rate, Instantaneous, gpm	58.2	53.2	5.0	5.0	5.0	5.0	5.0	5.0	5.0	5.0	
Pipe I.D., in	1.61	2.00	0.622	0.622	0.622	0.622	0.622	0.622	0.622	2.000	
Velocity, ft/sec	9.18	5.44	5.28	5.28	5.28	5.28	5.28	5.28	5.28	0.5	
Pressure, psig	146.2	145.2	119.7	116.7	99.1	80.5	63.3	54.9	2.6	-0.44	
Diff. Pressure, psi(d)	---	1.0	26.5	3.00	15.0	15.0	8.00	5.00	52.3	3.1	
Sp.Gr.	1.27	-n/c-	-n/c-	-n/c-	-n/c-	-n/c-	-n/c-	-n/c-	-n/c-	-n/c-	
Viscosity, cP	3.7	-n/c-	-n/c-	-n/c-	-n/c-	-n/c-	-n/c-	-n/c-	-n/c-	-n/c-	
Temperature, deg-C	25.0	-n/c-	-n/c-	-n/c-	-n/c-	-n/c-	-n/c-	-n/c-	-n/c-	-n/c-	
n/c = "No Change"											

CASE 2: STARTUP CONDITIONS (LOW HEAD LOSS)											Rev-
PROJECT: Tank Side Cesium Removal (TSCR) Unit											15-Apr-19
Measurement Point	1	1A	2	3	4	5	6	7	8	9	
Parameter	TSCR Feed	Feed Recirc HIHTL	Filter Inlet	Filter Outlet	IXC-1 Outlet	IXC-2 Outlet	IXC-3 Outlet	Trap Outlet	Backpressure Outlet	Treated Effluent HIHTL	
	J7	J9	J16	J16	J24	J32	J40	J47	J100	J54	
Flow Rate, Instantaneous, L/h	14,037	12,901	1,136	1,136	1,136	1,136	1,136	1,136	1,136	1,136	
Flow Rate, Instantaneous, gpm	61.8	56.8	5.0	5.0	5.0	5.0	5.0	5.0	5.0	5.0	
Pipe I.D., in	1.61	2.00	0.622	0.622	0.622	0.622	0.622	0.622	0.622	2.000	
Velocity, ft/sec	9.74	5.80	5.28	5.28	5.28	5.28	5.28	5.28	5.28	0.5	
Pressure, psig	167.9	166.96	82.4	81.4	66.5	58.4	56.8	54.4	1.7	-0.44	
Diff. Pressure, psi(d)	—	1.0	85.5	1.00	8.0	6.0	0.00	1.00	52.6	2.2	
Sp.Gr.	1.27	-n/c-	-n/c-	-n/c-	-n/c-	-n/c-	-n/c-	-n/c-	-n/c-	-n/c-	
Viscosity, cP	3.7	-n/c-	-n/c-	-n/c-	-n/c-	-n/c-	-n/c-	-n/c-	-n/c-	-n/c-	
Temperature, deg-C	25.0	-n/c-	-n/c-	-n/c-	-n/c-	-n/c-	-n/c-	-n/c-	-n/c-	-n/c-	
n/c = "No Change"											

JEREMIAH JOSEPH ROGERS
STATE OF WASHINGTON
48968
REGISTERED PROFESSIONAL ENGINEER
8/27/19

WASHINGTON RIVER PROTECTION SOLUTIONS
TANK SIDE CESIUM REMOVAL (TSCR)
PROCESS INFORMATION TABLE

BLDG. NO. POR655 POR656

CAUTION NOT COMPLETE WITHOUT CURRENT CHANGE DOCUMENTS FROM DATABASE

ATTENTION DESTROY THIS DOCUMENT BY SHREDDING MAY CONTAIN SENSITIVE INFORMATION

NAME	DATE	COMPANY
DRAFTER	N/A	AVT
DRAFTING CHECKER	N/A	AVT
DISCIPLINE ENGINEER	N/A	AVT
DESIGN AUTHORITY		

U.S. DEPARTMENT OF ENERGY
Office of River Protection

TSCR
PROCESS FLOW DIAGRAM

SIZE D | DRAWING NUMBER H-14-111242 | SHEET 1 | REV 2
SCALE N/A

INDEX NO. 7000

AVANTech INCORPORATED
AVANTECH PROJECT NO.: 18-13

DWG NUMBER	TITLE
N/A	N/A

DRAWING TRACEABILITY LIST

REF NUMBER	TITLE
RPP-CALC-62574	Tank Side Cesium Removal Process System Flow Analysis, Rev 0
RPP-SPEC-61910	Spec. for the TSCR Demonstration prj., Rev 1

REFERENCES

NEXT USED ON

REV NO.	DESCRIPTION	DRIG	CHK	APV'D	IDV	DATE
2	UPDATED REFERENCES	JS	RW	JR	-	05/30/19

REVISIONS