Marine Bluff Geotechnical Report
for
Hittmeier Single Family Residence

6102 Boardman Road NW, Olympia
Parcel 60880 00 0-100
Thurston County, Washington

December 13, 2008
Project #08121

Prepared For:

Ken Hittmeier
7908 61st Ave. NE
Olympia, Washington 98516

Prepared By:

Envirotech Engineering
74 NE Hurd Road
Belfair, Washington 98528
Phone: 360-275-9374
Fax: 360-275-4789

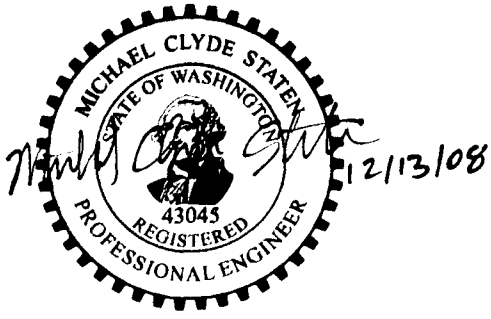

THURSTON COUNTY
RECEIVED
APR 20 2009
DEVELOPMENT SERVICES

TABLE OF CONTENTS

1.0 INTRODUCTION **2**

1.1 PROJECT INFORMATION 2
1.2 PURPOSE OF INVESTIGATION AND SCOPE OF WORK 2

2.0 SURFACE CONDITIONS **4**

2.1 GENERAL OBSERVATIONS 4
2.2 TOPOGRAPHY 4
2.2.1 Upslope Geomorphology *4*
2.2.2 Downslope Conditions *4*
2.3 SURFACE DRAINAGE 4
2.4 SLOPE AND EROSION OBSERVATIONS 5

3.0 SUBSURFACE INVESTIGATION **6**

3.1 FIELD METHODS, SAMPLING AND FIELD TESTING 6
3.2 GENERAL GEOLOGIC CONDITIONS 6
3.3 SPECIFIC SUBSURFACE CONDITIONS 6
3.3.1 Groundwater *7*
3.4 SOILS TESTING 7
3.4.1 Visual Classification *7*

4.0 ENGINEERING ANALYSIS, CONCLUSIONS AND RECOMMENDATIONS **8**

4.1 BUILDING FOUNDATION RECOMMENDATIONS 8
4.1.1 Bearing Capacity *8*
4.1.2 Settlement *8*
4.1.3 Concrete Slabs-on-Grade *9*
4.2 LATERAL EARTH PRESSURES 9
4.3 EARTHWORK CONSTRUCTION RECOMMENDATIONS 9
4.3.1 Excavation *9*
4.3.2 Placement and Compaction of Native Soils and Engineered Fill *10*
4.3.3 Retaining Wall Backfill *10*
4.3.4 Wet Weather Considerations *11*
4.3.5 Building Pads *11*
4.4 SLOPE STABILITY 11
4.4.1 Slope Stability Analysis *13*
4.4.2 Slope Stability Assessment *13*
4.4.3 Building and Footing Setbacks *14*
4.5 EROSION CONTROL 14
4.5.1 Temporary Erosion Control *14*
4.5.2 Permanent Erosion Control *15*
4.6 SURFACE AND SUBSURFACE DRAINAGE 15
4.6.1 Septic Drainfield Impacts *15*
4.7 VEGETATION BUFFER AND CONSIDERATIONS 16
4.8 SHORELINE RECESSION RATE 16
4.9 ON-SITE AND OFF-SITE IMPACTS 16
4.10 SEISMIC CONSIDERATIONS AND LIQUEFACTION 16
4.10.1 Liquefaction *17*

5.0 CLOSURE **18**

Appendix A - Site Plan
Appendix B - Soil Information (Soil Profile; Soil Logs; Well Reports)
Appendix C - Slope Stability Input & Output
Appendix D – Erosion Control
Appendix E – Drainage Details

1.0 INTRODUCTION

Envirotech Engineering (Envirotech) has completed a geotechnical investigation for a property located at 6102 Boardman Road NW, identified as parcel number 60880 00 0-100, Thurston County, Washington (Project). As presented herein, this report includes information pertaining to the Project in this Introduction Section; observations of the property and surrounding terrain in the Surface Conditions Section; field methods and soil descriptions in the Subsurface Investigation Section; and, recommendations for foundation, settlement, earthwork construction, lateral earth pressures, slope stability, erosion control, drainage, vegetation, and seismic considerations in the Engineering Analysis and Recommendations Section.

An initial geotechnical evaluation of the Project was conducted by Envirotech with the property owner, Ken Hittmeier, on December 4, 2008. It was determined that construction may occur within a marine bluff hazard area, and slopes in excess of 50% with a vertical relief of at least 15 feet were present near the planned development. Consequently, the proposed development will require a marine bluff geotechnical report pursuant to Critical Areas of Thurston County Ordinance 17.15. During the site visit by Envirotech, surface and subsurface conditions were assessed. After completion of the field work and applicable Project research, Envirotech prepared this marine bluff geotechnical report in order to fulfill the aforesaid ordinance.

1.1 Project Information

Information pertaining to the Project was provided by the property owner and owner's representative during the preparation of this report. Other information, such as site observations and assumed parameters typical of this type of development were provided by Evirotech during the geotechnical investigation.

The Project is accessed from Boardman Road, a paved road, immediately north of the 61st Ave NW alignment. The property is currently vacant land with a gravel surfaced driveway. The planned development consists of a 2-story single family residence. Foundation construction is expected to consist of continuous strip and isolated footings, with stem walls and/ or concrete slabs-on-grade. Anticipated construction other than the residence will include an on-site septic system, and possible ancillary features typical of this type of development. Approximate building footprint with relation to site features are illustrated in the Site Map in Appendix A.

1.2 Purpose of Investigation and Scope of Work

The purpose of this geotechnical investigation was to evaluate the Project in order to provide geotechnical recommendations relating to the development of the property. The investigation included characterizing the general Project surface and subsurface conditions, and evaluating the suitability of the soils to support the planned site activities.

In order to fulfill the purpose of investigation, the geotechnical program completed for the proposed improvements of the Project include:

- Review project information provided by the Project owner and/ or owner's representative;
- Conduct a site visit to document the site conditions that may influence the construction and performance of the proposed improvements;

- Define general subsurface conditions of the site by observing subsoils within test pits and earth cuts, review geological maps for the general area, research published references concerning slope stability, and review water well reports from existing wells near the Project;
- Perform soils testing to determine selected index and/or engineering properties of the site soils;
- Complete an engineering analysis supported by the planned site alterations, and the surface and subsurface conditions that were identified by the field investigation, soil testing, and applicable project research; and,
- Establish conclusions based on findings, and make recommendations for foundations, drainage, slope stability, erosion control, earthwork construction requirements, and other considerations.

2.0 SURFACE CONDITIONS

Information pertaining to the existing surface conditions for the Project was gathered on December 4, 2008 by Michael Staten, geotechnical engineer with Envirotech. During the site visit, the type of geotechnical investigation was assessed, and site features were documented that may influence construction and slope stability. This Surface Conditions Section provides information on general observations, vegetation, topography, drainage and slope/ erosion conditions for the Project and surrounding areas that may impact the Project.

2.1 General Observations

The Project is currently undeveloped land as previously mentioned. Eld Inlet is located on the east side of the property, and Boardman Road borders the west side. Other than Frye Cove County Park adjacent to the south of the property, rural residential development exists within the vicinity of the Project. Vegetation on and near the Project consists primarily of older and 2nd or 3rd growth cedars, maples, and other trees and shrubbery common to this area of the Pacific Northwest.

2.2 Topography

The Project is situated within and near moderate to very steep sloping terrain. The planned building envelope location appears to be mostly on a knoll with grades of less than 5%. The topographic information provided in this section was provided by Geomatics Land Surveying, a public lidar source, and incorporated observations and field measurements. Where necessary, slope verification included measuring slope lengths and inclinations with a cloth tape and inclinometer. See the Site Map in Appendix A of this report for an illustration of general topography with respect to the planned development.

2.2.1 Upslope Geomorphology

Ascending grades located beyond Boardman Road towards the west are minor, and begin over 300 feet away from the planned development.

There are no apparent water bodies or wetlands located upslope from the planned development.

2.2.2 Downslope Conditions

Descending grades ranging from approximately 53% to 107% exist to the south and east of the planned development. The vertical relief for the most critical slope is approximately 110 feet.

2.3 Surface Drainage

Stormwater runoff originating upslope from the anticipated development is expected to be minimal to none at all. Runoff is apparently intercepted by Boardman Road and directed to convergences beyond the property lines. One convergence is immediately south of the Project, and the other is immediately to the north of the north neighboring property. Excessive scour, erosion or other indications of past drainage problems were not observed within the immediate

vicinity of the planned development.

2.4 Slope and Erosion Observations

The slope grades near the Project signal a potential landslide or erosion hazard area. Some indicators that may suggest past slope movements include:

- Outwash of sediments near the bottom of the slope,
- Fissures, tension cracks, hummocky ground or stepped land masses on the face or top of the slope, and parallel to the slope,
- Fine, saturated subsurface soils,
- Old landslide debris,
- Significant bowing or leaning trees, or,
- Slope sloughing or calving.

Other than slightly bowing trees, and low erosional activity near the beach, indications of past landslides, current unstable slopes, deep-seated slope problems, surficial slope failures, or other erosion problems were not observed on the property during the site visit. Very steep slopes with relatively small vertical reliefs were observed on neighboring properties where small landlides may have occurred. See the Slope Stability Section in this report for additional details.

3.0 SUBSURFACE INVESTIGATION

Information on subsurface conditions pertaining to the Project was gathered on December 4, 2008 by Michael Staten, geotechnical engineer with Envirotech. Specific information on field methods, sampling, field testing, general geologic conditions, specific subsurface conditions, and results from soil testing are presented in this section of the report. Appendix B of this report includes pertinent information on subsurface conditions for the Project, such as subsoil cross-section(s), test pit log(s), and water well report(s). Applicable test pit locations are depicted on the Site Plan provided in Appendix A of this report.

3.1 Field Methods, Sampling and Field Testing

Information on subsurface conditions for the Project was accomplished by examining soils within test pits extending to depths of up to 5 feet below the existing ground surface, and observing cut slopes of up to 20 feet near the property. Information on subsurface conditions also included reviewing geological maps representing the general vicinity of the project, and water well reports originating from nearby properties. Soil samples were not collected for this Project.

Envirotech measured the relative density of the near-surface in-situ soils by gauging the resistance of hand tools. Within testing locations, field testing results generally indicated stiff to hard soils in the upper 5 feet of the subgrade.

3.2 General Geologic Conditions

In general, soils at the project are composed of materials from glacial advances. The geologic conditions as presented in the "Geologic Map of Washington," compiled by J. Eric Schuster, 2002 indicates Quaternary sediments, Q_g. Quaternary sediments are generally unconsolidated deposits, and dominantly deposited from glacial drift, including alluvium deposits. This project is located within the Puget Lowland. Typically, "lower tertiary sedimentary rocks unconformably overlie the Crescent Formation." as revealed in the Geologic Map. Initial sedimentary rocks were formed from shales, sandstones and coal deposits from rivers. During the Quaternary period, the Puget Lowland was covered by numerous ice sheets, with the most recent being the Fraser glacier with a peak of approximately 14,000 years ago. Upon the glacial retreat, the landscape was formed by glacial erosion glacial drift deposits.

Based on the subsurface investigation, and experience in the area, the geological unit for this Project is most likely glacial till. Till is usually described as "unsorted, unstratified, highly compacted mixture of clay, silt, sand, gravel, and boulders deposited by glacial ice of the Puget lobe; gray; may contain interbedded stratified silt, and gravel; sand-size fraction is very angular and contains abundant polycrystalline quartz, which distinguishes this unit from alpine till; cobbles and boulders are commonly striated and (or) faceted; although unweathered almost everywhere, may contain cobbles or small boulders of deeply weathered granitic rock."

3.3 Specific Subsurface Conditions

The following subsurface conditions are estimated descriptions of the Project subgrade utilizing information from the depth of penetration at all testing, sampling, observed and investigated locations. Soils for this project were described utilizing the Unified Soil Classification System (USCS). Using the USCS in conjunction with estimated relative densities and other anticipated

engineering properties of the soil, susceptibility for potential landslides, erosion and seismic hazards may be assessed.

The Project is composed of native soils with no indications of borrowed fill. For engineering purposes, these native soils consist of distinguishable layers, as presented below.

Soils within the upper 5 feet of natural ground were observed to be moist, brown silty clay with sand (CL-ML).

Soils below the upper 5 feet layer are believe to be a conglomerate of sand, silt, gravel and clay. This is based on nearby well reports (one located 140 feet from the property), and a deep earth cut on a neighboring property.

The relative densities of the soil are provided above in Section 3.1. Expanded and specific subsurface descriptions, other than what is provided in this section, are provided in the soil logs located in Appendix B of this report.

3.3.1 Groundwater

From the water well reports, permanent groundwater is approximately 200 feet directly below the property at the building pad location. Perched groundwater at shallow depths was not observed on-site, nor indicated on the well reports. However, a 3-foot lens of wet soils was recorded at a depth of 82 feet below the ground surface.

3.4 Soils Testing

The soil samples obtained at the Project site during the field investigation were preserved and transported for possible laboratory testing. Visual classification of soils was performed in the field. The following soil tests were performed in accordance with the American Standards for Testing and Materials (ASTM):

2 Visual Classifications (ASTM D2488)

3.4.1 Visual Classification

The general results from the visual classification are presented above in the Subsurface Conditions Section. Specifically, soils within the upper 4 feet in the testing location consisted of approximately 0% gravel, 20% sand-sized soils, and 80% silt and clay. Sandy soils observed on the neighboring property that are expected to be at depths greater than 10 feet below the ground surface, consisted mainly of 0% gravel, 95% sand, and 5% silt. Minor variations observed during the visual classification of particle size content (i.e. gravel, sand, fines), or isolated pockets within the soil stratification were insignificant in relation to the overall engineering properties of the soil.

Resource Stewardship & Land Use

4.0 ENGINEERING ANALYSIS, CONCLUSIONS AND RECOMMENDATIONS

The following sections present engineering analysis and recommendations for the proposed improvements of the Project. These recommendations have been made available based on the planned improvements as outlined in the Introduction Section of this report; general observations including drainage and topography as recapitulated in the Surface Conditions Section; and, soil conditions that were identified from the geotechnical investigation that is summarized in the Subsurface Investigation Section. Engineering analysis and recommendations for the Project that is provided herein, includes pertinent information for building foundations, earthwork construction, slope stability, erosion control, drainage, vegetation and seismic considerations.

4.1 Building Foundation Recommendations

Recommendations provided in this section account for the site development of a typical one- or two-story, single family residential structure. The recommended allowable bearing capacities and settlements as presented below, consider the probable type of construction as well as the field investigation results by implementing practical engineering judgment within published engineering standards. Evaluations include classifying site soils based on observed field conditions and soil testing for this Project. After deriving probable relative densities, unit weights and angles of internal friction of the in-situ soils, the Terzhagi ultimate bearing capacity equation was utilized for determining foundation width and depth.

Stepped foundations are acceptable, if warranted for this Project. Continuous, isolated, or stepped foundations shall be horizontally level between the bottom of the foundation and the top of the bearing strata. The frost penetration depth is not expected to extend beyond 12 inches below the ground surface for this Project under normal circumstances and anticipated design features. The soils on-site have **high** frost susceptible characteristics and should be used only to the extents provided in this report.

4.1.1 Bearing Capacity

Existing in-situ soils for this Project indicates that the structure can be established on shallow, continuous or isolated footings. Foundations shall be established on relatively undisturbed native soil. Alternatively, foundations may be constructed on selective re-compacted native soil or compacted engineered fill as described in the Earthwork Construction Recommendations Section of this report.

For a bearing capacity requirement of no more than **2000 psf**, a minimum footing width of **16 inches** shall be placed at a minimum of **18 inches** below the existing ground surface. Foundation recommendations are made available based on adherence to the remaining recommendations that are provided in this report.

4.1.2 Settlement

Total and differential settlement that a structure will undergo depends primarily on the subsurface conditions, type of structure, amount and duration of pressure exerted by the structure, reduction of pore water pressure, and in some instances, the infiltration of free moisture. Based on the expected native soil conditions, anticipated development, and construction abides by the recommendations in this report, the assumed foundation

system may undergo a maximum of 1.0 inch total settlement, and a maximum differential settlement of 0.75 inch.

4.1.3 Concrete Slabs-on-Grade

Interior slabs, if utilized, should be supported on a minimum of 6 inches of compacted coarse, granular material (Passing U.S. Sieve #10 or greater) that is placed over undisturbed native subgrade or engineered fill. Native soils found at the Project site are not suitable for use as material directly beneath concrete slabs. The **top 4 to 8 inches** of native soil should be removed prior to the placement and compaction of the aforementioned 6-inch coarse, granular material. Although not required for the structural integrity of the concrete slab-on-grade, a vapor barrier is suggested for damp-proofing slabs for heated buildings. If vapor barriers are used, it is suggested to utilize a barrier that is sufficiently thick to resist puncturing during construction (6 mil or greater), or place a 2 inch layer of sand above the barrier prior to placing the concrete slab.

4.2 Lateral Earth Pressures

Lateral earth pressures exerted through the backfill of a retaining wall are dependent upon several factors including height of retained soil behind the wall, type of soil that is retained, degree of backfill compaction, slope of backfill, surcharges, hydrostatic pressures, earthquake pressures, and the direction and distance that the top of the wall moves. Significant retaining structures are not anticipated for this Project. If retaining walls are later planned for this Project, prescriptive requirements from the County should be adhered to. For retaining structures with a height exceeding County prescriptive requirements, additional design parameters must be accounted for in the retaining wall analysis, and recommendations should only be provided by a qualified engineer after the type of backfill is acquired, inclination of backfill slope is estimated, and the final wall height is determined.

4.3 Earthwork Construction Recommendations

Founding material for building foundations shall consist of undisturbed native soils. Compacted engineered fill, or selective re-compacted native soils may be used to the extents provided in this Earthwork Construction Recommendations Section. The following recommendations include excavations, subgrade preparation, type of fill, and placement of fill for building foundations.

4.3.1 Excavation

Excavation is recommended to remove any excessive organic content or other deleterious material, if present, beneath foundations and to achieve appropriate foundation depth. Additional sub-excavation will be required for this Project if the soils below the required foundation depth are loose, saturated, or otherwise incompetent due to inappropriate land disturbing, or excessive water trapped within foundation excavations prior to foundation construction. All soils below the bottom of the excavation shall be competent, and relatively undisturbed or properly compacted fill. If these soils are disturbed or deemed incompetent, re-compaction of these soils below the anticipated footing depth is necessary. Excavations shall be completely dewatered, compacted, and suitable before placement of additional native soil, engineered fill or structural concrete. It is suggested that foundation excavations are inspected by a geotechnical engineer or qualified

professional in order to assess the bearing material prior to the placement of structural footings.

4.3.2 Placement and Compaction of Native Soils and Engineered Fill

For engineered fill or disturbed native soils that will be utilized as fill material directly beneath foundations, observation and/ or geotechnical testing is required prior to foundation construction. The following placement and compaction requirements are necessary.

For disturbed native soils or engineered fill beneath foundations, limits of compacted or re-compacted fill shall extend laterally from the bottom edge of the foundation at a rate of one foot for each foot of compacted or re-compacted fill beneath the foundation. See the illustration below.

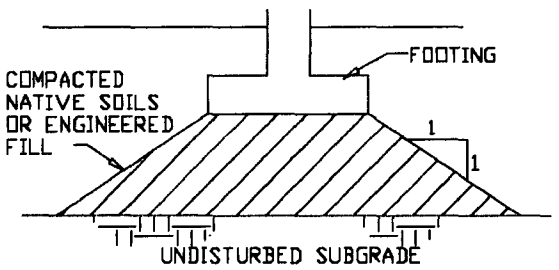

Both engineered fill and native soils used as compacted fill should be free of roots and other organics, rocks over 6 inches in size, or any other deleterious matter. Engineered fill should consist of the following gradation:

U.S. Standard Sieve	% Finer (by weight)
6"	100
3"	60 – 100
No. 4	20 – 60
No. 200	0 - 8

Table 1
Partical Size Distribution of Engineered Fill

Compaction shall be achieved in compacted lifts not to exceed **6 inches** and **12 inches** for native soils and engineered fill, respectively. Each lift should be uniformly compacted to at least 95% of the modified Proctor maximum dry density (ASTM D 1557) and within 3% of optimum moisture content. Each lift surface should be adequately maintained during construction in order to achieve acceptable compaction and inter-lift bonding.

Temporary earth cuts and temporary fill slopes exceeding 4 feet in height should be limited to a slope of **2:1**. Utility trenches or other confined excavations exceeding 4 feet should conform to OSHA safety regulations.

4.3.3 Retaining Wall Backfill

As previously mentioned, significant retaining structures are not anticipated for this

Project. Native soils **may not** be used as retaining wall backfill for this Project. Backfill may consist of engineered fill or borrow materials approved by a geotechnical engineer. Placement, compaction and extents of retaining wall backfill should also be specified by a geotechnical engineer or qualified professional.

4.3.4 Wet Weather Considerations

Due to the types of subsurface soils, additional provisions may be required during prolonged wet weather. Every precaution should be made in order to prevent free moisture from saturating the soils within excavations. If the bottom of excavations used for footing placement changes from a moist and dense/ hard characteristic as presented in this report to muck or soft, saturated conditions, then these soils become unsuitable for foundation bearing material. If this situation occurs, a geotechnical engineer should be notified, and these soils should be completely removed and replaced with compacted engineered fill or suitable native material as presented in this section.

4.3.5 Building Pads

Building pads for this Project, if utilized, shall be constructed per the fill placement and compaction recommendations as presented above. Both engineered fill and native soils may be used for building pads. However, structural fill will most likely be economically advantageous with relation to native fill. Building pad slopes shall be no steeper than 2:1 for both compacted engineered fill and re-compacted native soils used as fill. Building pad fill shall be "keyed" into the existing subgrade to a depth of at least **1 feet**. All footings shall be located at least **5 feet** away from the top of the fill slope.

4.4 Slope Stability

Landslides are natural geologic processes, and structures near slopes possess an inherent risk of adverse settlement, sliding or structural damage due to these processes. Geotechnical engineering cannot eliminate these risks for any site with sloping grades because gravity is constantly inducing strain on the sloping soil mass. Excessive wet weather and/ or earthquakes will exacerbate these strains. Geotechnical engineering considers excessive wet weather and 'design' earthquakes in order to provide an acceptable factor of safety for developing on or near sloping terrain for the current conditions. These factors of safeties are based on engineering standards such as defining engineering properties of the soil, topography, water conditions, seismic acceleration and surcharges.

According to the Coastal Zone Atlas of Mason County, Washington, the property is within and near terrain labeled 'Stable' and 'Unstable' regarding potential landslide activity. Stable slopes are generally not prone to landslides due to small grades and accommodating geology. Unstable slopes are considered unstable because of geology, groundwater, slope and/ or erosional factors. They include areas of landslides and talus too obscure to be individually mapped. Unstable Recent Landslides were identified along the shoreline beyond the property. Unstable Recent Landslides implies recent or historically active landslide areas. However, the areas designated as recent landslide activity is near the shore at the convergence ends, and over 400 feet away from the anticipated development. A site specific analyses and recommendations concerning the slopes are presented herein. A Stability Map from the Coastal Zone Atlas for the general area of this Project is provided below.

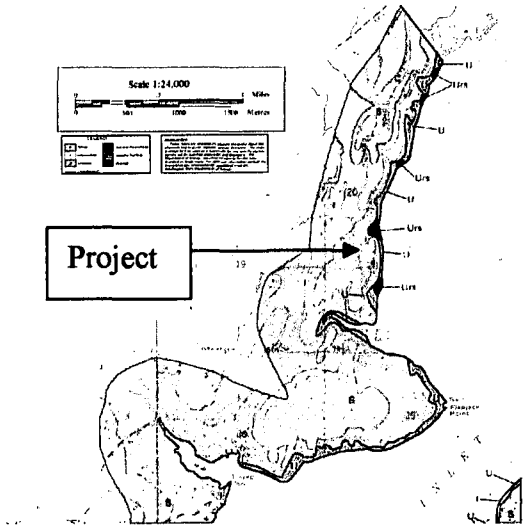

Map from Washington State Department of Ecology Website

According to the Resource Map from the Washington State Department of Natural Resources (DNR), the Project is near terrain labeled 'highly unstable' and 'highly erodible' relating to soils. These areas are located on the steeper slopes beyond the expected development. However, DNR did not indicate previous landslide activity on the property. A Resource Map from the DNR website for the general area of this Project is provided below:

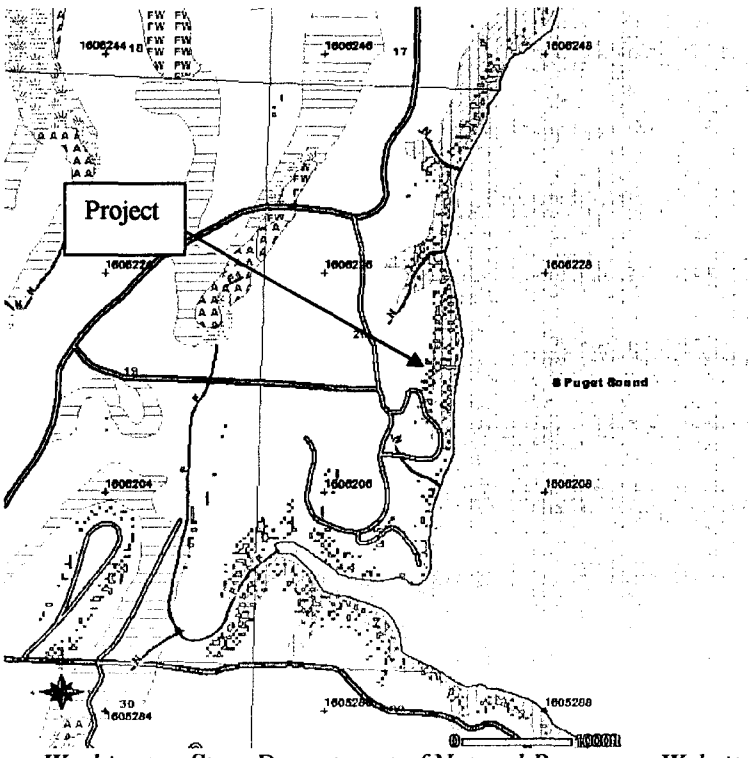

Resource Map from Washington State Department of Natural Resources Website

4.4.1 Slope Stability Analysis

The Simplified Bishop Method, utilizing 'STABLE' software, was used to analyze the static stability of the site slopes. Seismic conditions were estimated utilizing worst case scenario values from the static analysis, a quasi-static analysis coefficient of at least 0.15, and applying the applicable values to STABLE software. Various radii's and center points of the circle were automatically selected, and produced factor of safeties in a graphical and tabular format. Worst case scenario values were used in the slope stability analysis in regards to topography, surcharges, water content, internal friction and cohesion of the site soils. STABLE software has been repeatedly checked with manual calculations, and consistently proved to be a very conservative program. The following soil properties were used in the analysis, and are based on observed conditions, known geology, and/or published parameters:

Upper 15 feet of silty clay soils

- Soil unit weight: 130 pcf
- Angle of internal friction: 0 degrees
- Cohesion: 800 psf

Intermediate sandy soils

- Soil unit weight: 100 pcf
- Angle of internal friction: 36 degrees
- Cohesion: 0 psf

Deep stratification

- Soil unit weight: 130 pcf
- Angle of internal friction: 24 degrees
- Cohesion: 400 psf

Based on the slope stability analysis, a minimum factor of safety was determined to be 0.7 relative to static slope failures. In addition, a minimum factor of safety of 0.5 was calculated for seismic conditions. These factor of safeties were primarily limited to the face of the very steep slope utilizing conservative soil properties, and do not reflect conditions where development is expected to occur. For this Project, at the location of the proposed development, minimum factor of safeties for both static and dynamic conditions were estimated to be over 2.0. See the slope stability information in Appendix C for a depiction of input parameters and example of outputs.

4.4.2 Slope Stability Assessment

Surface sloughing or other types of surficial slope movements usually do not affect the deep-seated structural capability of the slope. However, excessive and/or repeated surficial slope movements, if not repaired, may represent a threat to the structural integrity of the slope. If this situation does arise, the slope shall be inspected by a

geotechnical engineer. Subsequently, maintenance may be required in order to prevent the possibility of further surficial or deep seated slope movements that may be damaging to life and property.

Slope failures are located on neighboring properties near the shoreline. These failures are believed to be shallow peel-offs due to a combination of slopes exceeding 60%, and excessive water from the inlet and respective convergences during large storm events. In addition, shoreline erosion is inevitable for existing site conditions. The frequency of these hazards cannot be predicted due to the volatility of nature. However, it is Envirotech's opinion that these hazards will not effect the planned construction within its design life, or will the proposed development aggravate the above mentioned hazards.

4.4.3 Building and Footing Setbacks

Provided that assumptions relating to construction occur and recommendations are followed as presented in this report, the factor of safety for slope stability is sufficient for a **50 feet** footing setback from the face of the nearby descending slopes exceeding 50%. See the figure below and the Site Plan in Appendix A for an illustration of the setbacks.

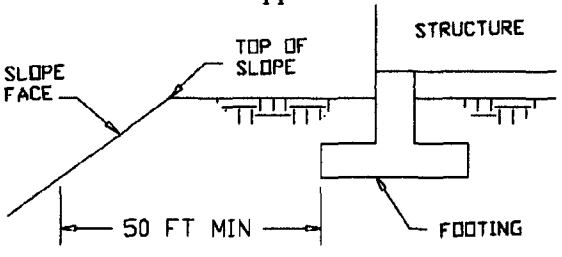

The required setbacks may be reduced, if necessary. Depending on site constraints, some mitigation measures may include pin-piles beneath the foundation, deeper foundations, or engineered retaining walls.

4.5 Erosion Control

Based on the USCS description of the Project soils, the surface soils are considered highly erodible. Temporary and permanent erosion control measures should be required for site development. Extents of temporary erosion control will mostly depend on the timeliness of construction, moisture content of the soil, and amount of rainfall during construction. Soil erosion typical to the existing site conditions and planned disturbance of the Project include wind-borne silts during dry weather, and sediment transport during prolonged wet weather. Sediment transport could be from stormwater runoff or tracking off-site with construction equipment.

Sedimentation control should be adequate when utilizing the erosion control recommendations as presented herein together with implementing appropriate erosion controls with the degree of care as expected from a licensed contractor. Additional erosion control information and specifications may be found in the appropriate "Stormwater Management Manual for Western Washington," prepared by the Washington State Department of Ecology Water Quality Program.

4.5.1 Temporary Erosion Control

Erosion control during construction should include minimizing the removal of vegetation

to the least extent possible, and may include stockpiling cleared vegetation, silt fencing, intercepting swales, berms, straw bales, plastic cover or other standard controls. Straw matting is presented in this report as the first choice for temporary erosion control. Silt fencing or other standard controls may also be utilized for this Project. Although the existing driveway contains adequate and appropriately sized gravel, maintenance of the driveway may be required to inhibit sediment tracking onto paved areas. Maintenance is required if excessive sediments have accumulated on the gravel surface prior to construction. Any erosion control should be located down-slope and beyond the limits of construction and clearing of vegetation where surface water is expected to flow. If the loss of sediments appears to be greater than expected, or erosion control measures are not functioning as needed, additional measures must be implemented immediately. See Appendix D for sketches and general notes regarding selected erosion control measures. The Site Map in Appendix A depicts the recommended locations for erosion control facilities to be installed.

4.5.2 Permanent Erosion Control

Permanent erosion control is necessary if substantial vegetation has not been established within disturbed areas upon completion of the Project. Temporary erosion control should remain in place until permanent erosion control has been established. Permanent erosion control may include promoting the growth of vegetation within the exposed areas by mulching, seeding or an equivalent measure. Selected recommendations for permanent erosion control are provided in Appendix D. Additional erosion control measures that should be performed include routine maintenance and replacement, when necessary, of permanent erosion control, vegetation, drainage structures and/or features. The following Surface and Subsurface Drainage Section may have additional recommendations with relation to permanent erosion for surface drainage features.

4.6 Surface and Subsurface Drainage

Positive drainage should be provided in the final design for all planned residential buildings. Drainage shall include sloping the ground surface, driveways and sidewalks away from the Project structures. All constructed surface and subsurface drains should be adequately maintained during the life of the structure. If drainage problems occur during or after construction, additional engineered water mitigation will be required. This may include a combination of swales, berms, drain pipes, infiltration facilities, or outlet protection in order to divert water away from the structures to an appropriate protected discharge area.

Both footing perimeter drains and roof drains are required for this Project. Subsurface water intercepted in the footing perimeter drains, and stormwater collected from roof drains shall be separately tight-lined to an appropriate infiltration location **beyond the toe of the steep slope exceeding 50%**. If subsurface infiltration cannot be utilized, an energy dissipater is required at the outlet. Recommended outlet locations are delineated on the Site Plan in Appendix A, and drainage details are provided in Appendix E of this report.

4.6.1 Septic Drainfield Impacts

The approximate location of the proposed septic drainfield is presented on the Site Plan in Appendix A of this report. Based on the septic drainfield location with relation to the

existing and proposed topography, the drainfields are not expected to adversely influence the structures near the critical slopes. This is also based on compliance with the recommendations in this report.

4.7 Vegetation Buffer and Considerations

Vegetation is an excellent measure to minimize surficial slope movements and erosion on slope faces and exposed surfaces. By removing trees, the root strength is decreased over time, thereby lowering the 'apparent' cohesion of the soil. Transpiration is decreased, which results in additional groundwater, increased pore water pressure and less cohesion/ friction of the soil particles. Stormwater runoff also increases, and, fewer plants will create less absorption of the force from raindrops, thereby creating the potential for erosion hazards.

Vegetation shall not be removed from the face of the steep slope or within a distance of **50 feet** beyond the top of the slope. The top of the slope is considered the grade break in which exceeds 50%. However, any tree deemed hazardous to life or property shall be removed. If tree removal is necessary beyond construction areas, then stumps and roots shall remain in place, and the underbrush and soil shall remain undisturbed as much as possible. Any disturbed soil shall be graded and re-compacted in order to restore the terrain similar to preexisting conditions and drainage patterns. See the Site Plan in Appendix A of this report for a depiction of the setback/ buffer.

4.8 Shoreline Recession Rate

In addition to the slope stability analysis, an evaluation of the shoreline recession rate for this Project was completed. This was accomplished by carefully reviewing and comparing aerial photographs of the Project from several sources. Some of these sources include a 1956 aerial for the Soil Survey of Thurston County, 2006 aerial from the Washington State Department of Ecology, and various shoreline photographs from the Washington State Department of Natural Resources. Based on available information, we conclude that the past shoreline recession for this Project is less than 10 feet in 50 years. Bulkheads are not required for the development of this Project, and are not expected during the design life of this Project.

4.9 On-Site and Off-Site Impacts

From a geotechnical position, it is Envirotech's opinion that the subject property and adjacent properties to the proposed development should not be significantly impacted if all recommendations in this report are followed. This is based on the expected site development, existing topography, land cover, and the recommendations presented in this report.

4.10 Seismic Considerations and Liquefaction

Soils immediately below the expected foundation depth for this Project are generally **Type D**, corresponding to the International Building Code (IBC) soil profiles. According to the IBC, the regional seismic zone is 3 for this Project. The estimated peak ground acceleration ranges from 0.50g to 0.60g. This estimation is based on the United States Geological Survey (USGS) National Seismic Hazard Project in which there is an estimated 2% probability of exceedance within the next 50 years.

There are no known faults beneath this Project. The nearest Class 'A' or Class 'B' fault to this property are the Tacoma and Hood Canal Fault Zones, in which the distal ends are both over **16 miles** to the north of this Project. This information is based on the USGS Quaternary Fault and Fold Database for the United States.

4.10.1 Liquefaction

The potential for liquefaction is believed to be low to moderate for this Project. Although a significant poorly-graded sand layer is present within the upper 50 feet of the subsurface soils, various conditions alleviate the hazard for liquefaction. These conditions include the presence of dense sands, and the lack of a permanent shallow water table. Free flowing groundwater exhibits less pore pressures within the soil than confined groundwater, or soils below a water table. Less pore water pressures are beneficial for a lower liquefaction potential.

5.0 CLOSURE

Based on the project information and site conditions as presented in this report, it is Envirotech's opinion that additional geotechnical studies are not required to further evaluate this Project.

Due to the inherent natural variations of the soil stratification and the nature of the geotechnical subsurface exploration, there is always a possibility that soil conditions encountered during construction are different than those described in this report. Therefore, it is recommended that a qualified engineer observes and documents the construction, or Envirotech is promptly notified if project and subsurface conditions found on-site are not as presented in this report so that we can re-evaluate our recommendations.

This report presents geotechnical design guidelines, and is intended only for the owner, or owners' representative, and location of project described herein. This report should not be used to dictate construction procedures or relieve the contractor of his responsibility.

Any and all content of this geotechnical report is only valid in conjunction with the compliance of all recommendations provided in this report. Semantics throughout this report such as 'shall,' 'should' and 'recommended' imply that the correlating design and/or specifications must be adhered to in order to protect life and property. Semantics such as 'suggested' or 'optional' refer that the associated design or specification may or may not be performed. The recommendations provided in this report are valid for the proposed development at the issuance date of this report. Changes to the site other than the expected development, changes to ordinances or regulatory codes, or broadening of accepted geotechnical standards may affect the conclusions and recommendations of this report.

The services described in this report were prepared under the responsible charge of Michael Staten, a professional engineer with Envirotech. Michael Staten has appropriate education and experience in the field of geotechnical engineering in order to assess landslide hazards, earthquake hazards, and general soil mechanics.

Please contact Michael Staten at 360-275-9374 if you have any questions, comments, or require additional information.

Sincerely,
Envirotech Engineering

Michael Staten, P.E.
Geotechnical Engineer

APPENDIX A

SITE PLAN

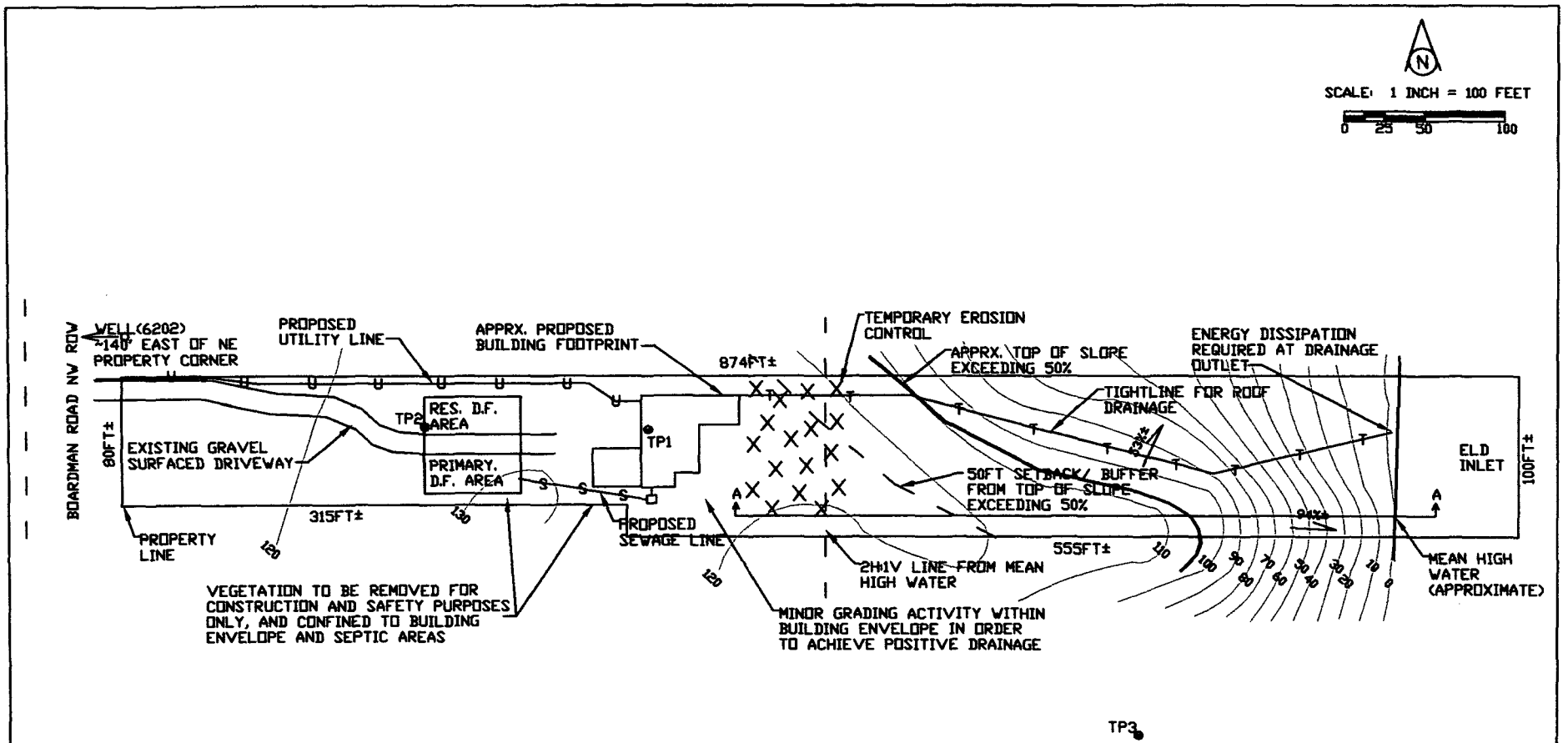

NOTES:
1. EROSION CONTROL MAY BE REQUIRED FOR THIS SITE. GENERAL LOCATIONS ARE DEPICTED, AND ALTERNATIVES MAY BE UTILIZED AS EXPLAINED IN THE GEOTECHNICAL REPORT.
2. CONTOURS WERE NOT PREPARED BY A LICENSED LAND SURVEYOR. CONTOURS WERE EXTRAPOLATED FROM A PUBLIC LIDAR SOURCE AND OTHER MEANS, AND INCORPORATED FIELD MEASUREMENTS AS EXPLAINED IN THE GEOTECHNICAL REPORT.
3. BOUNDARIES WERE NOT PREPARED BY A LICENSED SURVEYOR. PROPERTY LINES AND SITE FEATURES WITH RELATION TO THE PROPERTY LINES MUST BE VARIFIED BY THE OWNER. RECOMMENDATIONS IN THIS REPORT PROVIDE SETBACKS, DEPTHS, ETC. WITH RELATION TO GEOLOGIC FEATURES.

LEGEND

+ + +	TEMPORARY EROSION CONTROL
——→	SLOPE DIRECTION
—80—	EXISTING CONTOUR
TP1 ⊗	TEST PIT

PROJECT/ OWNER/ LOCATION:
HITTMEIER
GEOTECHNICAL INVESTIGATION
KEN HITTMEIER
6102 BOARDMAN ROAD NW, OLYMPIA
PARCEL 60880 00 0-100
THURSTON COUNTY, WASHINGTON

ENGINEER:
ENVIROTECH ENGINEERING
74 NE HURD ROAD
BELFAIR, WASHINGTON 98528
360-275-9374

SITE PLAN

APPENDIX B

SOIL INFORMATION

VERTICAL AND HORIZONTAL SCALE:
SCALE: 1 INCH = 60 FEET

0 15 30 60

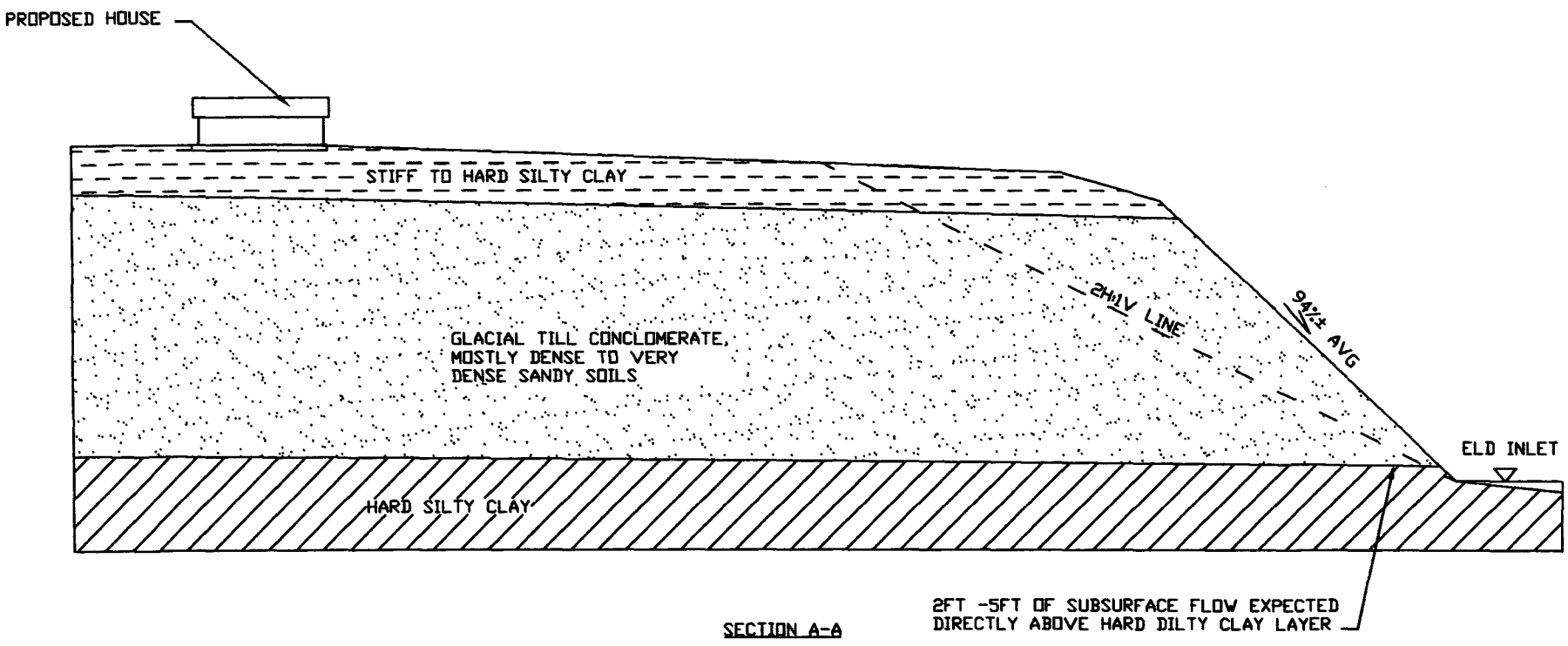

SECTION A-A

NOTES:

1) MINOR GRADE CHANGES REQUIRED IN ORDER TO ACHIEVE POSITIVE DRAINAGE
2) THE SOIL PROFILE IS ACCURATE FOR THE DEPTH OF THE OBSERVED TEST PITS AT THE SPECIFIED LOCATIONS. LOWER DEPTHS ARE BASED ON SITE GEOLOGY, WELL LOG(S), AND/OR EXPERIENCE IN THE GENERAL AREA.

PROJECT/ OWNER/ LOCATION:
SINGLE FAMILY RESIDENCE
GEOTECHNICAL REPORT

HITTMEIER
PARCEL 60880 00 0-100
THURSTON COUNTY, WASHINGTON

ENGINEER:
ENVIROTECH ENGINEERING
74 NE HURD ROAD
BELFAIR, WASHINGTON 98528
360-275-9374

SOIL PROFILE

TEST PIT LOG

TEST PIT NUMBER TP-1

PROJECT: SFR Geotechnical Report
PROJECT NO: 08121
CLIENT: Hittmeier
LOCATION: Parcel 60880 00 0-100
Thurston County, Washington

DATE OF LOG: 12/4/2008
LOGGED BY: MCS
EXCAVATOR: N/A
DRILL RIG: None
ELEVATION: N/A

INITIAL DEPTH OF WATER: N/A

FINAL DEPTH OF WATER: N/A

DEPTH	SOIL STRATA, SAMPLERS AND TEST DATA	USCS	DESCRIPTION	LL	PI	STANDARD PENETRATION TEST DEPTH	N	CURVE 10 30 50
0		CL-ML	Brown, moist, stiff SILTY CLAY with SAND. Sand is mostly fine. Medium plasticity.					
1			Excavation terminated at approximately 1.0 feet					
2								
3								
4								
5								
6								
7								
8								
9								
10								

No Groundwater Encountered

This information pertains only to this boring and should not be interpreted as being indicitive of the entire site.

ENVIROTECH ENGINEERING
Geotechnical Engineering

TEST PIT LOG

TEST PIT NUMBER TP-2

PROJECT: SFR Geotechnical Report
PROJECT NO: 08121
CLIENT: Hittmeier
LOCATION: Parcel 60880 00 0-100
Thurston County, Washington

DATE OF LOG: 12/4/2008
LOGGED BY: MCS
EXCAVATOR: N/A
DRILL RIG: None
ELEVATION: N/A

INITIAL DEPTH OF WATER: N/A

FINAL DEPTH OF WATER: N/A

DEPTH	SOIL STRATA, SAMPLERS AND TEST DATA	USCS	DESCRIPTION	LL	PI	STANDARD PENETRATION TEST DEPTH	N	CURVE 10 30 50
0		CL-ML	Brown, moist, stiff SILTY CLAY with SAND. Sand is mostly fine. Medium plasticity.					
1			Hard					
2								
3			Pocket of grey					
4								
5			Excavation terminated at approximately 5.0 feet					
6								
7								
8								
9								
10								

No Groundwater Encountered

This information pertains only to this boring and should not be interpreted as being indicitive of the entire site.

ENVIROTECH ENGINEERING
Geotechnical Engineering

TEST PIT LOG

TEST PIT NUMBER TP-3 con't

PROJECT: SFR Geotechnical Report
PROJECT NO: 08121
CLIENT: Hittmeier
LOCATION: Parcel 60880 00 0-100
Thurston County, Washington

DATE OF LOG: 12/4/2008
LOGGED BY: MCS
EXCAVATOR: N/A
DRILL RIG: None
ELEVATION: N/A

INITIAL DEPTH OF WATER: N/A

FINAL DEPTH OF WATER: N/A

DEPTH	SOIL STRATA, SAMPLERS AND TEST DATA	USCS	DESCRIPTION	LL	PI	STANDARD PENETRATION TEST DEPTH	N	CURVE 10 30 50
10								
11								
12								
13								
14								
15			Increasing coarse sand					
16								
17								
18								
19								
20			Cut terminated at approximately 20 feet					

No Groundwater Encountered

This information pertains only to this boring and should not be interpreted as being indicitive of the entire site.

ENVIROTECH ENGINEERING
Geotechnical Engineering

TEST PIT LOG

TEST PIT NUMBER TP-3

PROJECT: SFR Geotechnical Report
PROJECT NO: 08121
CLIENT: Hittmeier
LOCATION: Parcel 60880 00 0-100
Thurston County, Washington

DATE OF LOG: 12/4/2008
LOGGED BY: MCS
EXCAVATOR: N/A
DRILL RIG: None
ELEVATION: N/A

INITIAL DEPTH OF WATER: N/A

FINAL DEPTH OF WATER: N/A

DEPTH	SOIL STRATA, SAMPLERS AND TEST DATA	USCS	DESCRIPTION	LL	PI	STANDARD PENETRATION TEST DEPTH	N	CURVE 10 30 50
0		SP	Brown, moist, loose POORLY GRADED SAND with traces of gravel and silt. Sand is mostly medium. Non-plastic. Grey, medium dense					
1								
2								
3								
4			Dense					
5								
6								
7								
8								
9								
10								

No Groundwater Encountered

This information pertains only to this boring and should not be interpreted as being indicitive of the entire site.

ENVIROTECH ENGINEERING
Geotechnical Engineering

Correction Copy

WATER WELL REPORT

STATE OF WASHINGTON

Start Card No. W111721
Unique Well I.D. # ACQ449
Water Right Permit No.

(1) OWNER: Name MAPLE SHORES WATER ASSOC. Address 6202 BOARDMAN ROAD NW OLYMPIA, WA 98502-

(2) LOCATION OF WELL: County THURSTON - NW 1/4 NW 1/4 Sec 20 T 19N N., R 2W WM
(2a) STREET ADDRESS OF WELL (or nearest address) BOARDMAN ROAD, OLYMPIA

(3) PROPOSED USE: DOMESTIC

(4) TYPE OF WORK: Owner's Number of well (If more than one)
NEW WELL Method: CABLE

(5) DIMENSIONS: Diameter of well 8 inches
Drilled 238 ft Depth of completed well 238 ft.

(6) CONSTRUCTION DETAILS:
Casing installed: 8 " Dia. from +1 ft. to 226 ft.
WELDED CASING " Dia. from ft. to ft.
" Dia. from ft. to ft.

Perforations: NO
Type of perforator used
SIZE of perforations in. by in.
perforations from ft. to ft.
perforations from ft. to ft.
perforations from ft. to ft.

Screens: YES
Manufacturer's Name HOUSTON
Type SLOTTED Model No.
Diam. 5 slot size .035 from 226 ft. to 238 ft.
Diam. slot size from ft. to ft.

Gravel packed: YES Size of gravel 10/20
Gravel placed from 238 ft. to 225 ft.

Surface seal: YES To what depth? 20 ft.
Material used in seal BENTONITE
Did any strata contain unusable water? NO
Type of water? Depth of strata ft.
Method of sealing strata off

(7) PUMP: Manufacturer's Name
Type H.P.

(8) WATER LEVELS: Land-surface elevation above mean sea level ... ft.
Static level 108 ft. below top of well Date 07/13/99
Artesian Pressure lbs. per square inch Date
Artesian water controlled by

(10) WELL LOG

Formation: Describe by color, character, size of material and structure, and show thickness of aquifers and the kind and nature of the material in each stratum penetrated, with at least one entry for each change in formation.

MATERIAL	FROM	TO
BROWN TOP SOIL	0	4
BROWN HARD PAN	4	12
PACKED SAND AND GRAVEL	12	63
BROWN CLAY	63	67
SANDY BROWN CLAY GRAVEL	67	82
BROWN SAND AND WATER	82	85
GRAY CLAY	85	100
GRAY CLAY WET	100	125
GRAY CLAY GRAVEL WET	125	193
CEMENTED GRAVEL GRAY CLAY WET	193	201
CEMENTED GRAY CLAY SAND	201	218
GRAY CONGLOMERATE WET	218	227
GRAVEL & WATER	227	230
	230	238

Work started 06/28/99 Completed 07/13/99

(9) WELL TESTS: Drawdown is amount water level is lowered below static level.
Was a pump test made? NO If yes, by whom?
Yield: gal./min with ft. drawdown after hrs.

Recovery data
Time Water Level Time Water Level Time Water Level

Date of test / /
Bailer test 20 gal./min. 38 ft. drawdown after 1 hrs.
Air test gal./min. w/ stem set at ft. for hrs.
Artesian flow g.p.m. Date
Temperature of water Was a chemical analysis made? NO

WELL CONSTRUCTOR CERTIFICATION:
I constructed and/or accept responsibility for construction of this well, and its compliance with all Washington well construction standards. Materials used and the information reported above are true to my best knowledge and belief.

NAME ARCADIA DRILLING INC.
(Person, firm, or corporation) (Type or print)

ADDRESS SE 170 WALKER PARK RD

[SIGNED] License No. 1445

Contractor's Registration No. ARCADDIO98K1 Date 10/18/99

The Department of Ecology does NOT Warranty the Data and/or the Information on this Well Report.

File Original and First Copy with Department of Ecology
Second Copy—Owner's Copy
Third Copy—Driller's Copy

WATER WELL REPORT

STATE OF WASHINGTON

Start Card No. 064765

Water Right Permit No.

(1) OWNER: Name Thurston County Parks Address 2617-A 12th Ct SW - Oly - 98502

(2) LOCATION OF WELL: County Thurston NW ¼ SW ¼ Sec. 20 T. 19 N., R. 2 W.

(2a) STREET ADDRESS OF WELL (or nearest address) Frye Cove Park - 61st St - Olympia 98502

(3) PROPOSED USE: [X] Domestic [ ] Irrigation [ ] DeWater [ ] Industrial [ ] Test Well [ ] Municipal [ ] Other

(4) TYPE OF WORK: Owner's number of well (if more than one)
Abandoned [ ] New well [X] Deepened [ ] Reconditioned [ ]
Method: Dug [ ] Cable [X] Rotary [ ] Bored [ ] Driven [ ] Jetted [ ]

(5) DIMENSIONS: Diameter of well 6 inches.
Drilled 202 feet. Depth of completed well 200'-8½" ft.

(6) CONSTRUCTION DETAILS:
Casing installed: 6" Diam. from +1 ft. to 191-1½' ft.
Welded [X] Liner installed [ ] Threaded [ ] " Diam. from ft. to ft.
" Diam. from ft. to ft.

Perforations: Yes [ ] No [X]
Type of perforator used
SIZE of perforations in. by in.
perforations from ft. to ft.
perforations from ft. to ft.
perforations from ft. to ft.

Screens: Yes [X] No [ ]
Manufacturer's Name Westco
Type Stainless Model No.
Diam 5 7/8 Slot size 25 from 191-1½ ft. to 200-8½ ft.
Diam Slot size from ft. to ft.

Gravel packed: Yes [ ] No [X] Size of gravel
Gravel placed from ft. to ft.

Surface seal: Yes [X] No [ ] To what depth? 18 ft.
Material used in seal Bentonite
Did any strata contain unusable water? Yes [ ] No [X]
Type of water? Depth of strata
Method of sealing strata off

(7) PUMP: Manufacturer's Name
Type: H.P.

(8) WATER LEVELS: Land-surface elevation above mean sea level ft.
Static level 99'-8½" ft. below top of well Date 11-17-92
Artesian pressure lbs. per square inch Date
Artesian water is controlled by (Cap, valve, etc.)

(9) WELL TESTS: Drawdown is amount water level is lowered below static level
Was a pump test made? Yes [X] No [ ] If yes, by whom? COC
Yield: 40 gal./min. with 70 ft. drawdown after 4 hrs.
" " " "
" " " "

Recovery data (time taken as zero when pump turned off) (water level measured from well top to water level)

Time	Water Level	Time	Water Level	Time	Water Level
15:10	168'-6"	15:13	116-5½	15:20	107-5
15:11	134-4	15:14	112'-0	15:25	105-5½
15:12	123-0¼	15:15	104-7	15:35	104-11½

Date of test 11-17-92

Bailer test gal./min. with ft. drawdown after hrs.
Airtest gal./min. with stem set at ft. for hrs.
Artesian flow g.p.m. Date
Temperature of water Was a chemical analysis made? Yes [X] No [ ]

(10) WELL LOG or ABANDONMENT PROCEDURE DESCRIPTION

Formation: Describe by color, character, size of material and structure, and show thickness of aquifers and the kind and nature of the material in each stratum penetrated, with at least one entry for each change of information.

MATERIAL	FROM	TO
Clay Brown	0	11
Clay, gravel & sand	11	16
clay & sand	16	54
Clay grey	54	145
Clay, sand & gravel (compact) grey	145	151
Sand, gravel & clay (seepage) grey	151	163
Gravel & sand (water) grey 15 gpm @ 167'	163	167
Clay, gravel & sand (compact) grey	167	186
Sand & gravel (not active) grey	186	201
Clay & sand grey	201	202

Work started 11-23-92, 19. Completed 11-17, 19 92

WELL CONSTRUCTOR CERTIFICATION:

I constructed and/or accept responsibility for construction of this well, and its compliance with all Washington well construction standards. Materials used and the information reported above are true to my best knowledge and belief.

NAME Carpenter Drilling Co. (PERSON, FIRM, OR CORPORATION) (TYPE OR PRINT)
Address 4210 Shincke Rd - Olympia
(Signed) Jerry R. Carpenter (WELL DRILLER) License No. 067
Contractor's Registration No. CARPEOC14030 Date 11-18, 19 92

(USE ADDITIONAL SHEETS IF NECESSARY)

ECY 050-1-20 (10/87) 1329 3

The Department of Ecology does NOT Warranty the Data and/or the Information on this Well Report.

Resource Stewardship & Land Use

Please print, sign and return to the Department of Ecology

Water Well Report

Original – Ecology, 1st copy – owner, 2nd copy – driller

Construction/Decommission

☑ Construction

☐ Decommission *ORIGINAL INSTALLATION Notice of Intent Number* 156383

PROPOSED USE: ☑ Domestic ☐ Industrial ☐ Municipal ☐ DeWater ☐ Irrigation ☐ Test Well ☐ Other

TYPE OF WORK: Owner's number of well (if more than one) LOT 3

☑ New well ☐ Reconditioned *Method:* ☐ Dug ☐ Bored ☐ Driven ☐ Deepened ☐ Cable ☑ Rotary ☐ Jetted

DIMENSIONS: Diameter of well 6 inches, drilled 220 ft.

Depth of completed well 220 ft.

CONSTRUCTION DETAILS

Casing Installed: ☑ Welded 5 " Diam. from +2 ft. to 220 ft. ☐ Liner installed " Diam. from ft. to ft. ☐ Threaded " Diam. from ft. to ft.

Perforations: ☐ Yes ☑ No

Type of perforator used

SIZE of perfs in. by in. and no. of perfs from ft. to ft.

Screens: ☐ Yes ☑ No ☐ K-Pac Location

Manufacturer's Name

Type Model No.

Diam. Slot size from ft. to ft.

Diam. Slot size from ft. to ft.

Gravel/Filter packed: ☐ Yes ☑ No ☐ Size of gravel/sand

Materials placed from ft. to ft.

Surface Seal: ☑ Yes ☐ No To what depth? 20 ft.

Material used in seal BENTONITE

Did any strata contain unusable water? ☐ Yes ☑ No

Type of water? Depth of strata

Method of sealing strata off

PUMP: Manufacturer's Name

Type H.P.

WATER LEVELS: Land-surface elevation above mean sea level ft.

Static level 100 ft. below top of well Date 9/2/04

Artesian pressure lbs. per square inch Date

Artesian water is controlled by (cap, valve, etc.)

WELL TESTS: Drawdown is amount water level is lowered below static level

Was a pump test made? ☐ Yes ☑ No If yes, by whom?

Yield gal./min. with ft. drawdown after hrs.

Yield: gal./min. with ft. drawdown after hrs.

Yield: gal./min. with ft. drawdown after hrs.

Recovery data (time taken as zero when pump turned off) (water level measured from well top to water level)

Time	Water Level	Time	Water Level	Time	Water Level

Date of test

Bailer test gal./min. with ft. drawdown after hrs.

Airtest 50 gal./min. with stem set at 200 ft. for 1 hrs

Artesian flow g.p.m. Date

Temperature of water Was a chemical analysis made? ☐ Yes ☑ No

Current Notice of Intent No. W181708

Unique Ecology Well ID Tag No. AKB712

Water Right Permit No. EXEMPT WELL

Property Owner Name DARELL & NANCY MIDLES

Well Street Address BOARDMAN & YOUNG ROAD (LOT 3)

City OLYMPIA County THURSTON

Location NW1/4-1/4 NW1/4 Sec 20 Twn 19N R 2W EWM ☐ or WWM ☑ circle one

Lat/Long (s, t, r still REQUIRED) Lat Deg Lat Min/Sec

Long Deg Long Min/Sec

Tax Parcel No. 12920220302 (LOT 3)

CONSTRUCTION OR DECOMMISSION PROCEDURE

Formation: Describe by color, character, size of material and structure, and the kind and nature of the material in each stratum penetrated, with at least one entry for each change of information indicate all water encountered (USE ADDITIONAL SHEETS IF NECESSARY.)

MATERIAL	FROM	TO
BROWN SILTY SAND	0	5
BROWN SAND COMPACT	5	14
BROWN SAND, GRAVEL COMPACT	14	17
BROWN SAND, GRAVEL	17	34
BROWN SAND	34	52
SILTY BROWN SAND	52	71
GRAY SILTY CLAY, GRAVEL, WATER	71	220

RECEIVED
OCT 18 2004
Washington State
Department of Ecology

Start Date 9/2/04 Completed Date 9/2/04

WELL CONSTRUCTION CERTIFICATION: I constructed and/or accept responsibility for construction of this well, and its compliance with all Washington well construction standards. Materials used and the information reported above are true to my best knowledge and belief.

Driller/Engineer/Trainee Name (Print) ED NELSON

Driller/Engineer/Trainee Signature

Driller or trainee License No. 1886

If TRAINEE,

Driller's Licensed No.

Driller's Signature

Drilling Company ARCADIA DRILLING INC

Address PO BOX 1790

City, State, Zip SHELTON WA 98584

Contractor's Registration No ARCADDI098K1 Date 9/3/04

Ecology is an Equal Opportunity Employer. ECY 050-1-20 (Rev 2/03)

The Department of Ecology does NOT Warranty the Data and/or the Information on this Well Report.

APPENDIX C

SLOPE STABILITY

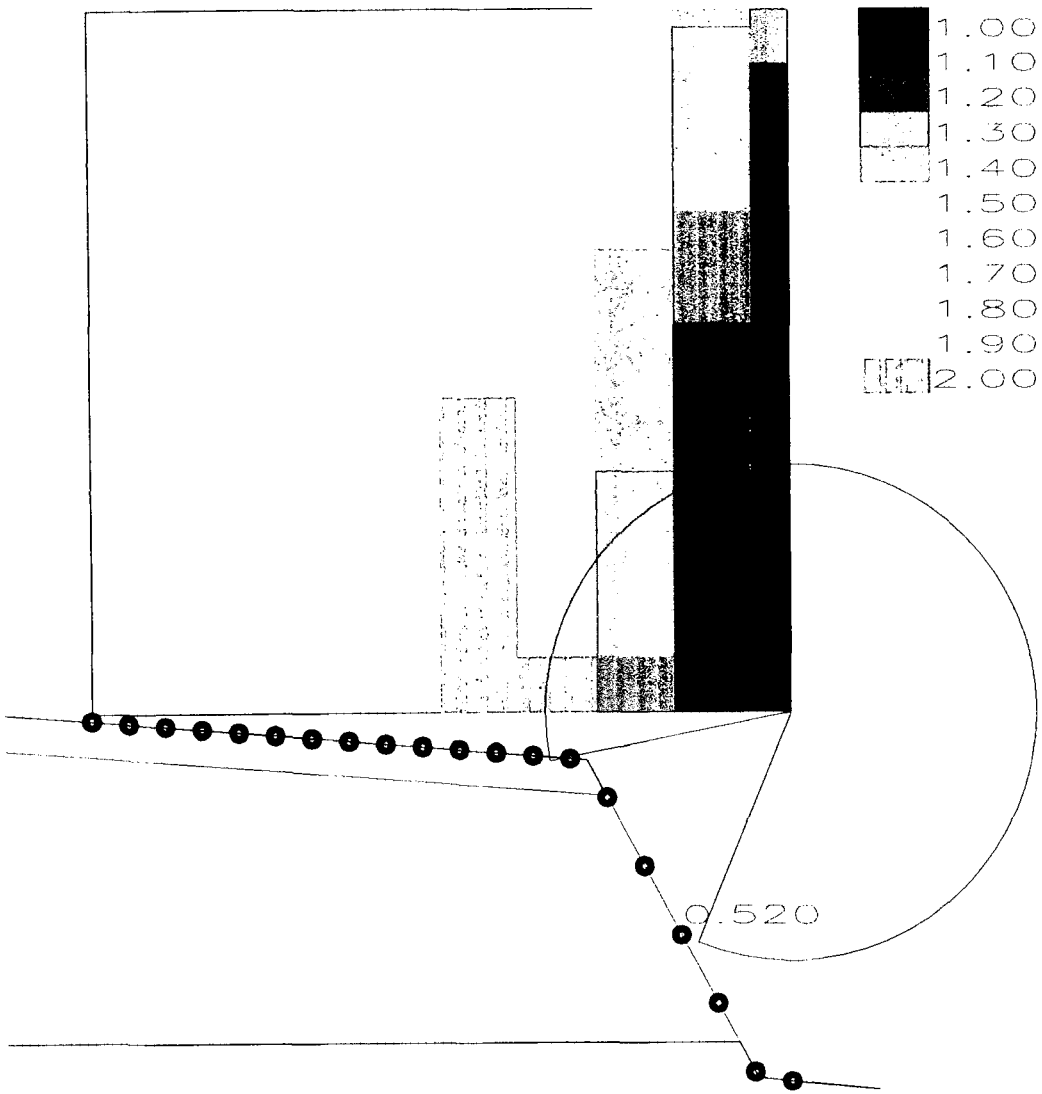

Project : Hittmeier
Datafile : Dynamic
Analysis : Bishop
STABLE.2002 MZ Associates Ltd

Resource Stewardship & Land Use

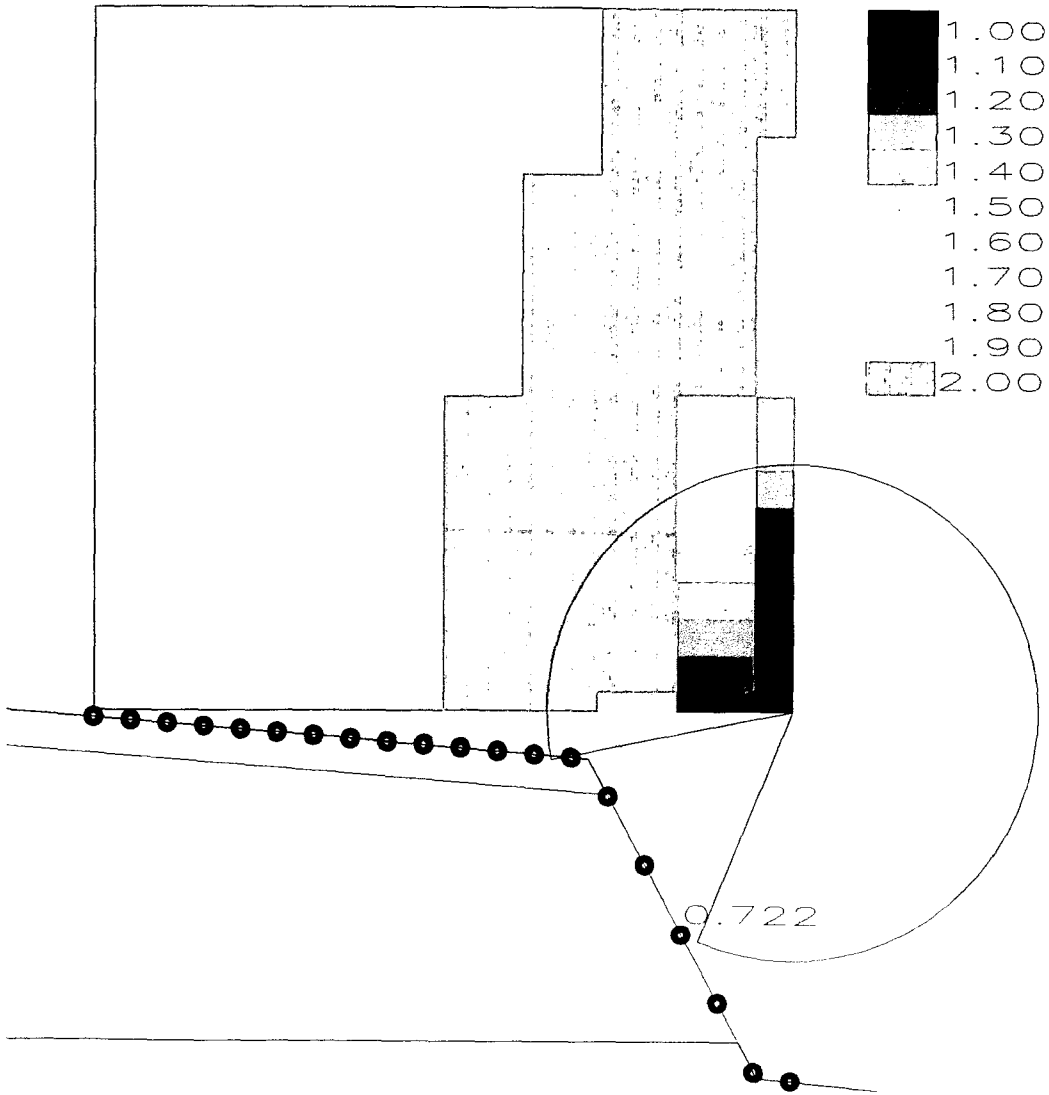

Project : Hittmeier
Datafile : Static
Analysis : Bishop
STABLE.2002 MZ Associates Ltd

Resource Stewardship & Land Use

STABLE Version 9.03.00u

Bishop
****

TITLE
Dynamic
****
UNITS (Metric/Imperial) = I

****
GEOMETRY DEFINITION

POINTS

NO.	X	Y
1	0.000	0.000
2	250.000	-20.000
3	258.000	-35.000
4	0.000	-15.000
5	315.000	-140.000
6	0.000	-140.000
7	323.000	-155.000
8	375.000	-160.000
9	37.500	-3.000
10	53.290	-4.260
11	69.080	-5.530
12	84.870	-6.790
13	100.660	-8.050
14	116.450	-9.320
15	132.240	-10.580
16	148.030	-11.840
17	163.820	-13.110
18	179.610	-14.370
19	195.390	-15.630
20	211.180	-16.890
21	226.970	-18.160
22	242.760	-19.420
23	258.550	-36.020
24	274.340	-65.100
25	290.130	-94.190
26	305.920	-123.280
27	321.710	-152.580
28	337.500	-156.390

LINES

Lo X	Hi X	SOIL
1	2	1
2	3	1
4	3	2
3	5	2
6	5	3
5	7	3
7	8	3

****
SOILS

SOIL	NAME	LINETYPE-PEN	COHESION	FRICTION	UNIT WT.
1	Silty	Clay	0.00	800.0	0.000
2	Sand	CONTINUOUS-BLUE	0.00	36.0	100.000
3	Sandy	Silt	0.00	130.0	24.000
4	Soil_4	CONTINUOUS-BLACK	0.00	0.0	0.000

****

PORE PRESSURE SPECIFICATION

SOIL	PIEZO Y/N/P	RU Value	EXCESS Value
1	N	0.000	0.000
2	N	0.000	0.000
3	N	0.000	0.000
4	N	0.000	0.000

PIEZOMETRIC SURFACE

POINT

POINT PORE PRESSURES

POINT PRESSURE

****

SLIP DIRECTION (+/- X) = +

****

SLIP-CIRCLES

AUTOMATIC

Circle Centre Grid Extremities

```
                300.000
            ***************
            *             *
    37.500  *             *   337.500
            *             *
            ***************
                  0.000
```

X spacing -- no. of cols (max 10)= 10
Y spacing -- no. of rows (max 20)= 20

Grid	1	Circles through point	9
Grid	2	Circles through point	10
Grid	3	Circles through point	11
Grid	4	Circles through point	12
Grid	5	Circles through point	13
Grid	6	Circles through point	14
Grid	7	Circles through point	15
Grid	8	Circles through point	16
Grid	9	Circles through point	17

APPENDIX D

EROSION CONTROL

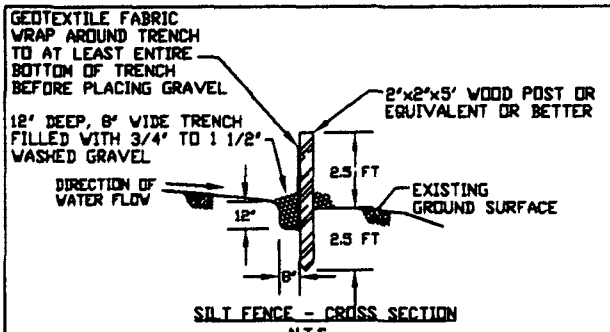

SILT FENCE - CROSS SECTION
N.T.S.

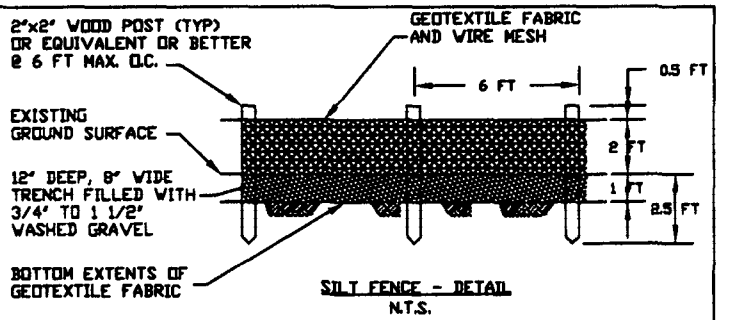

SILT FENCE - DETAIL
N.T.S.

GENERAL NOTES:

1. SHOULD THE TEMPORARY EROSION AND SEDIMENT CONTROL MEASURES SHOWN ON THESE PLANS PROVE TO BE INADEQUATE DURING CONSTRUCTION, THE CONTRACTOR SHALL INSTALL ADDITIONAL EROSION AND SEDIMENT CONTROL FACILITIES.
2. ALL EROSION AND SEDIMENT CONTROL FACILITIES AND DEVICES SHALL BE INSPECTED DAILY AND IMMEDIATELY MAINTAINED, IF NECESSARY.
3. ALL EROSION AND SEDIMENT CONTROL FACILITIES AND DEVICES SHALL BE LEFT IN PLACE UNTIL THE UPSLOPE AREAS HAVE BEEN PERMANENTLY STABILIZED.

TEMPORARY EROSION CONTROL NOTES:

FOR ALL AREAS WHICH HAVE BEEN STRIPPED OF VEGETATION OR EXPERIENCED LAND DISTURBING ACTIVITIES, AND WHERE NO FURTHER WORK IS ANTICIPATED FOR A PERIOD EXCEEDING THE LISTED CRITERIA BELOW, ALL DISTURBED AREAS MUST BE IMMEDIATELY STABILIZED WITH MULCHING, GRASS PLANTING OR OTHER APPROVED EROSION CONTROL TREATMENT APPLICABLE TO THE TIME OF YEAR. GRASS SEEDING ALONE WILL ONLY BE ACCEPTABLE DURING THE MONTHS OF APRIL THROUGH SEPTEMBER. HOWEVER, SEEDING MAY PROCEED WHENEVER IT IS IN THE INTEREST OF THE OWNER/CONTRACTOR, BUT MUST ALSO BE AUGMENTED WITH MULCHING, NETTING OR OTHER APPROVED TREATMENT.

DRY SEASON (MAY 1 THRU SEPTEMBER 30) -- THE CLEARING OF LAND, INCLUDING THE REMOVAL OF EXISTING VEGETATION OR OTHER GROUND COVER, MUST BE LIMITED TO ONLY AS MUCH LAND AS CAN RECEIVE APPROPRIATE PROTECTIVE COVER OR BE OTHERWISE STABILIZED, AFTER HAVING BEEN CLEARED OR OTHERWISE DISTURBED , BY NO LATER THAN SEPTEMBER 30 OF A GIVEN YEAR. UNLESS IMMEDIATE STABILIZATION IS SPECIFIED IN THE EROSION AND SEDIMENT CONTROL PLAN, ALL AREAS CLEARED OR OTHERWISE DISTURBED MUST BE APPROPRIATELY STABILIZED THROUGH THE USE OF MULCHING, NETTING, PLASTIC SHEETING, EROSION BLANKETS, FREE DRAINING MATERIAL, ETC., BY SEPTEMBER 30 OR SOONER PER THE APPROVED PLAN OF ACTION. UNLESS OTHERWISE APPROVED BY THE COUNTY, SEEDING, FERTILIZING AND MULCHING OF CLEARED OR OTHERWISE DISTURBED AREAS SHALL BE PERFORMED DURING THE FOLLOWING PERIODS: MARCH 1 TO MAY 15, AND AUGUST 15 TO OCTOBER 1. SEEDING AFTER OCTOBER 1 WILL BE DONE WHEN PHYSICAL COMPLETION OF THE PROJECT IS IMMINENT AND THE ENVIROMENTAL CONDITIONS ARE CONDUCIVE TO SATISFACTORY GROWTH. IN THE EVENT THAT PERANENT STABILIZATION IS NOT POSSIBLE, AN ALTERNATIVE METHOD OF GROUND COVER, SUCH AS MULCHING, NETTING, PLASTIC SHEETING, EROSION BLANKETS, ETC., MUST BE INSTALLED BY NO LATER THAN SEPTEMBER 30.

IN THE EVENT THAT CONSTRUCTION ACTIVITIES OR OTHER SITE DEVELOPMENT ACTIVITIES ARE DISCONTINUED FOR AT LEAST 4 CONSECUTIVE DAYS, THE OWNER/CONTRACTOR SHALL BE RESPONSIBLE FOR THE INSPECTION OF ALL EROSION AND SEDIMENT CONTROL FACILITIES IMMEDIATELY AFTER STORM EVENTS, AND AT LEAST ONCE EVERY WEEK. THE OWNER/ CONTRACTOR SHALL BE RESPONSIBLE FOR THE MAINTENANCE AND REPAIR OF ALL EROSION AN SEDIMENT CONTROL FACILITIES.

WET SEASON (OCTOBER 1 THRU APRIL 30) -- ON SITES WHERE UNINTERUPTED CONSTRUCTION ACTIVITY IS IN PROGRESS, THE CLEARING OF LAND, INCLUDING THE REMOVAL OF EXISTING VEGETATION AND OTHER GROUND COVER, SHALL BE LIMITED TO AS MUCH LAND AREA AS CAN BE COVERED OR STABILIZED WITHIN 24 HOURS IN THE EVENT A MAJOR STORM IS PREDICTED AND/ OR EROSION AND SEDIMENT TRANSPORT OFF-SITE IS OBSERVED.

ALL CLEARED OR DISTURBED AREAS SHALL RECEIVE APPROPRIATE PROTECTIVE COVER OR BE OTHERWISE STABILIZED, SUCH AS MULCHING, NETTING, PLASTIC SHEETING, EROSION BLANKETS, FREE DRAINING MATERIAL, ETC., WITHIN 5 DAYS AFTER HAVING BEEN CLEARED OR OTHERWISE DISTURBED IF NOT BEING ACTIVELY WORKED. SILT FENCING, SEDIMENT TRAPS, SEDIMENT PONDS, ETC., WILL NOT BE VIEWED AS ADEQUATE COVER IN AND OF THEMSELVES. IN THE EVENT THAT ANY LAND AREA NOT BEING ACTIVELY WORKED REMAINS UNPROTECTED OR HAS NOT BEEN APPROPRIATELY STABILIZED 5 DAYS AFTER HAVING BEEN CLEARED, ALL CONSTRUCTION ACTIVITY ON THE SITE, EXCEPT FOR APPROVED EROSION AND SEDIMENT CONTROL ACTIVITY, SHALL IMMEDIATELY CEASE UNTIL SUCH A TIME AS AFOREMENTIONED LAND AREA HAS BEEN APPROPRIATELY PROTECTED OR STABILIZED.

SILT FENCE

1. GEOTEXTILE FILTER FABRIC TYPE SHALL BE PER SPECIFIED IN THE "STORMWATER MANAGEMENT MANUAL FOR THE PUGET SOUND BASIN," OR APPLICABLE COUNTY STANDARDS
2. GEOTEXTILE FILTER FABRIC SHALL BE PURCHASED IN A CONTINUOUS ROLL CUT TO THE LENGTH OF EACH BARRIER TO AVOID USE OF JOINTS. IF JOINTS ARE NECESSARY, FILTER FABRIC SHALL BE SPLICED TOGETHER ONLY AT A SUPPORT POST WITH A MINIMUM 6-INCH OVERLAP AND SECURELY FASTENED AT BOTH ENDS TO THE POST.
3. STANDARD FILTER FABRIC SHALL BE FASTENED USING 1" STAPLES OR TIE WIRES (HOG RINGS) @ 4 IN SPACING.
4. POSTS SHALL BE SPACED AND PLACED AT DEPTHS INDICATED IN THE DETAILS ON THIS SHEET, AND DRIVEN SECURELY INTO THE GROUND.
5. WIRE MESH SHALL BE 2"X2"X14 GAUGE OR EQUIVILENT. THE WIRE MESH MAY BE ELIMINATED IF EXTRA-STRENGTH FILTER FABRIC (MONOFILAMENT), AND CLOSER POST SPACING IS USED.
6. A TRENCH SHALL BE EXCAVATED ACCORDING TO THE DETAILS ON THIS SHEET ALONG THE LINE OF THE POSTS AND UPSLOPE FROM THE SILT FENCE.
7. SILT FENCES SHALL BE LOCATED DOWNSLOPE FROM THE CLEARING LIMITS OF THE PROJECT.

PERMANENT EROSION CONTROL NOTES:

HAY OR STRAW MATTING

1. STRAW SHALL BE AIR DRIED, AND FREE FROM WEED SEEDS AND COARSE MATERIAL.
2. APPLY AT APPROXIMATELY 75 TO 100 POUNDS PER 1000 SQUARE FEET OF GROUND.
3. MINIMUM THICKNESS SHALL BE 2 INCHES.
4. HAY OR STRAW IS SUBJECT TO BLOWING. KEEP MOIST OR TIED DOWN.

SEEDING FOR RAW SLOPES

1. BEFORE SEEDING, INSTALL NEEDED SURFACE RUNOFF CONTROL MEASURES SUCH AS GRADIENT TERRACES, INTERCEPTOR DIKES, SWALES, LEVEL SPREADERS AND SEDIMENT BASINS.
2. THE SEED BED SHALL BE FIRM WITH FAIRLY FINE SURFACE, FOLLOWING SURFACE ROUGHENING. PERFORM ALL OPERATIONS ACCROSS OR PERPENDICULAR TO THE SLOPE.
3. SEEDING RECOMMENDATIONS, AS SHOWN BELOW, AND SHOULD BE APPLIED AT THE RATE OF 120 POUNDS PER ACRE.
4. SEED BEDS PLANTED BETWEEN MAY 1 AND OCTOBER 31 WILL REQUIRE IRRIGATION AND OTHER MAINTENANCE AS NECESSARY TO FOSTER AND PROTECT THE ROOT STRUCTURE.
5. SEED BEDS PLANTED BETWEEN NOVEMBER 1 AND APRIL 30, ARMORING OF THE SEED BED WILL BE NECESSARY, (e.g., GEOTEXTILES, JUTE MAT, CLEAR PLASTIC COVERING).
6. FERTILIZERS ARE TO BE USED ACCORDING TO SUPPLIERS' RECOMMENDATIONS. AMOUNTS SHOULD BE MINIMIZED, ESPECIALLY ADJACENT TO WATER BODIES AND WETLANDS.

USE THE FOLLOWING RECOMMENDED SEED MIXTURE FOR EROSION CONTROL, OR A COUNTY APPROVED ALTERNATE SEED MIXTURE.

NAME	PROPORTIONS BY WEIGHT (%)	PURITY (%)	GERMINATION (%)
REDTOP (AGROSTIS ALBA)	10	92	90
ANNUAL RYE (LOLIUM MULTIFLORUM)	40	98	90
CHEWING FESUE (FESTUCA RUBRA COMMUTATA) (JAMESTOWN, BANNER, SHADOW, KOKET)	40	97	80
WHITE DUTCH CLOVER (TRIFOLIUM REPENS)	10	96	90

MULCHING

1. MATERIALS USED FOR MULCHING ARE RECOMMENDED TO BE WOOD FIBER CELLULOSE, AND SHOULD BE APPLIED AT A RATE OF 1000 POUNDS PER ACRE.
2. MULCH SHOULD BE APPLIED IN ALL AREAS WITH EXPOSED SLOPES GREATER THAN 2:1 (HORIZONTAL:VERTICAL).
3. MULCHING SHOULD BE USED IMMEDIATELY AFTER SEEDING OR IN AREAS WHICH CANNOT BE SEEDED BECAUSE OF THE SEASON. ALL AREAS REQUIRING MULCH SHALL BE COVERED BY NOVEMBER 1.

PROJECT/ OWNER/ LOCATION:
SINGLE FAMILY RESIDENCE
GEOTECHNICAL REPORT
HITTMEIER
PARCEL 60880 00 0-100
THURSTON COUNTY, WASHINGTON

ENGINEER:
ENVIROTECH ENGINEERING
74 NE HURD ROAD
BELFAIR, WASHINGTON 98528
360-275-9374

EROSION CONTROL

Resource Stewardship & Land Use

APPENDIX E

DRAINAGE DETAILS

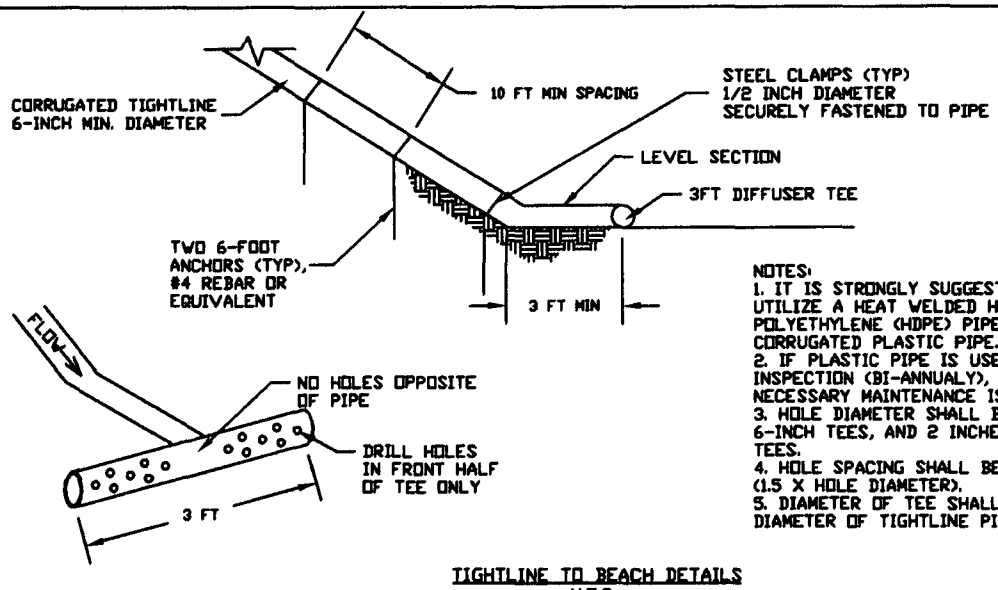

NOTES:
1. IT IS STRONGLY SUGGESTED TO UTILIZE A HEAT WELDED HIGH DENSITY POLYETHYLENE (HDPE) PIPE IN LIEU OF CORRUGATED PLASTIC PIPE.
2. IF PLASTIC PIPE IS USED, FREQUENT INSPECTION (BI-ANNUALY), AND NECESSARY MAINTENANCE IS REQUIRED.
3. HOLE DIAMETER SHALL BE 1 INCH FOR 6-INCH TEES, AND 2 INCHES FOR 12-INCH TEES.
4. HOLE SPACING SHALL BE EQUAL TO (1.5 X HOLE DIAMETER).
5. DIAMETER OF TEE SHALL EQUAL DIAMETER OF TIGHTLINE PIPE.

TIGHTLINE TO BEACH DETAILS
N.T.S.

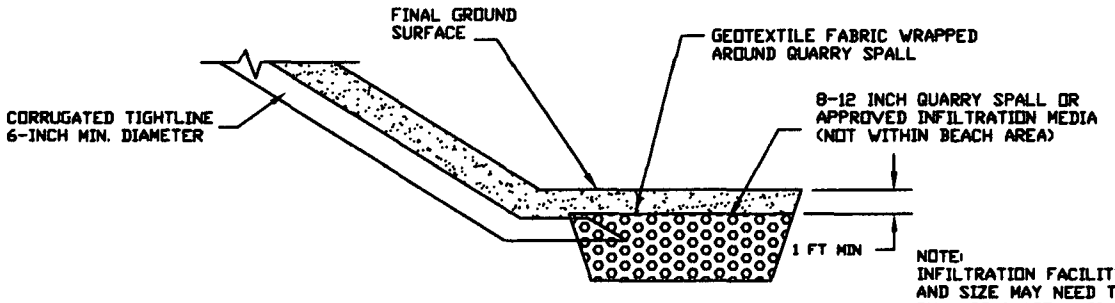

NOTE:
INFILTRATION FACILITY COMPONENTS AND SIZE MAY NEED TO BE DETERMINED BY A DRAINAGE ENGINEER AND/ OR PREVAILING GOVERNMENT AGENCY.

SUBSURFACE DRAINAGE DETAILS - OPTION 2
N.T.S.

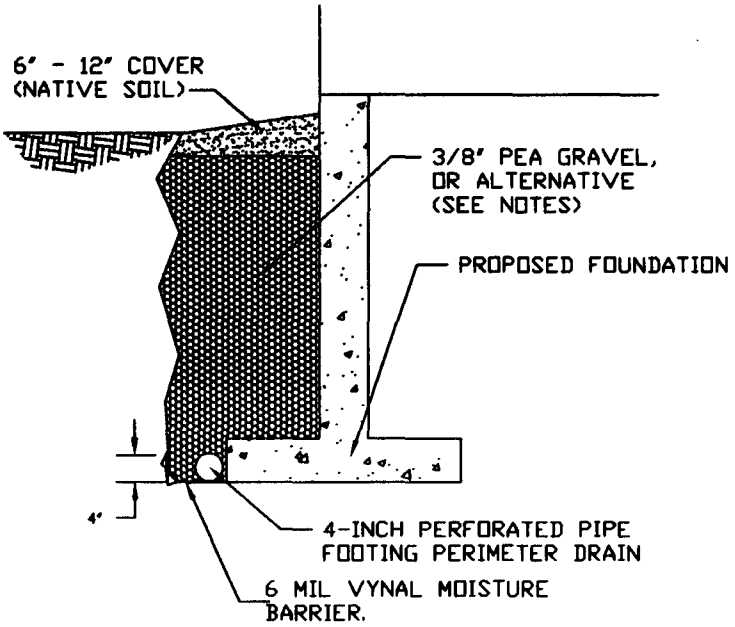

NOTES:
1) PROPER SHORING AND SAFETY OF SIDE SLOPES DURING TRENCH EXCAVATION IS CONTRACTOR'S RESPONSIBILITY.
2) 3/8" PEA GRAVEL IS RECOMMENDED. LARGER DRAIN ROCK MAY BE USED IN CONJUNCTION WITH FILTER FABRIC FULLY ENCASING DRAIN ROCK.
3) FOR FOOTING DRAINS LOCATED GREATER THAN 6 FEET BELOW THE FINAL GROUND SURFACE, DOUBLE-WALLED PERFORATED PIPE SHOULD BE USED.
4) ONE END OF THE MOISTURE BARRIER SHALL BE PLACED BEFORE POURING THE FOOTING, AND OVERLAP THE FOOTING FOOTPRINT BY AT LEAST 3". THE OTHER END SHALL CURVE UPWARD, AND TERMINATE AT THE TOP OF THE DRAIN PIPE.

FOOTING PERIMETER DRAIN DETAILS
N.T.S.

PROJECT/ OWNER/ LOCATION:
SINGLE FAMILY RESIDENT
GEOTECHNICAL REPORT
HITTMEIER
PARCEL 60880 00 0-100
THURSTON COUNTY, WASHINGTON

ENGINEER:
ENVIROTECH ENGINEERING
74 NE HURD ROAD
BELFAIR, WASHINGTON 98528
360-275-9374

DRAINAGE DETAILS