GeoEngineers

September 2, 1988

Consulting Geotechnical
Engineers and Geologists

Sargent Engineers
320 West Bay Drive, Suite 101
Olympia, Washington 98502

Attention: Mr. Stephen Roberts, P.E.

Gentlemen:

We are pleased to submit four copies of our "Report of Geotechnical Services, Six Bridges, Pacific County, Washington." The scope of services for our studies is described in our revised proposal dated May 10, 1988 and in our original proposal dated April 15, 1988. Our services were authorized by Mr. Steve Roberts of Sargent Engineers on May 19, 1988. Preliminary conclusions and recommendations have been discussed with Mr. Roberts and Mr. Harold Sargent of Sargent Engineers, and with Mr. Chuck Mikkola of the Pacific County Department of Public Works.

We appreciate the opportunity to be of service to you on this interesting project. If you have any questions regarding the contents of this report, or if we can be of further service, please call.

Yours very truly,

GeoEngineers, Inc.

Gordon M. Denby

Gordon M. Denby, P.E.
Associate

HRP:GMD:cs

File No. 1322-01-6

GeoEngineers, Inc.
2405 140th Ave. NE, Suite 105
Bellevue, WA 98005
Telephone (206) 746-5200
Fax. (206) 746-5068

Geo Engineers

TABLE OF CONTENTS

	Page No.
INTRODUCTION	1
SCOPE	2
SITE CONDITIONS	3
GENERAL	3
JACOBSEN BRIDGE	3
WOODARD LANDING BRIDGE	4
BULLARD BRIDGE	4
CHURCH BRIDGE	5
MENLO SOUTH FORK #2 BRIDGE	6
HANEN BRIDGE	6
CONCLUSIONS AND RECOMMENDATIONS	7
GENERAL	7
FOUNDATION SUPPORT	8
Jacobsen Bridge	8
Woodard Landing Bridge	10
Bullard Bridge	12
Church Bridge	13
Menlo South Fork #2 Bridge	14
Hanen Bridge	15
SCOUR PROTECTION	17
APPROACH SECTIONS	17
General	17
Site Preparation	18
Fill Material and Placement	18
Settlement	19
Cut and Fill Slopes	19
ABUTMENT RETAINING WALLS	19
Lateral Soil Pressures	19
Backfill	20
Drainage	20
CONSTRUCTION MONITORING	20
USE OF THIS REPORT	21

Geo Engineers

TABLE OF CONTENTS (CONTINUED)

List of Figures

	Figure No.
VICINITY MAP	1
SITE PLAN JACOBSEN BRIDGE	2
SITE PLAN WOODARD LANDING BRIDGE	3
SITE PLAN BULLARD BRIDGE	4
SITE PLAN CHURCH BRIDGE	5
SITE PLAN MENLO SOUTH FORK #2 BRIDGE	6
SITE PLAN HANEN BRIDGE	7

APPENDIX

	Page No.
FIELD EXPLORATIONS AND LABORATORY TESTING	A-1
FIELD EXPLORATIONS	A-1
LABORATORY TESTING	A-2

List of Appendix Figures

	Figure No.
SOIL CLASSIFICATION SYSTEM	A-1
KEY TO BORING LOG SYMBOLS	A-2
LOGS OF BORINGS	A-3 thru A-20

Geo Engineers

REPORT

GEOTECHNICAL ENGINEERING SERVICES

SIX BRIDGES

PACIFIC COUNTY, WASHINGTON

FOR THE

PACIFIC COUNTY DEPARTMENT OF PUBLIC WORKS

INTRODUCTION

This report presents the results of our geotechnical engineering services for the replacement of six bridges at various sites in Pacific County, Washington. The bridge sites are located on the Vicinity Map, Figure 1.

The project consists of replacement of the following bridges: (1) Jacobsen Bridge over Drainage Ditch No. 1 near the community of Heather, (2) Woodard Landing Bridge over Wilson Creek in Willapa, (3) Bullard Bridge over the Willapa River north of Menlo, (4) Church Bridge over the South Fork Palix River south of Bay Center Junction, (5) Menlo South Fork #2 Bridge over Rue Creek west of Menlo, and (6) Hanen Bridge over the Willapa River south of Holcomb. The Jacobsen and Menlo South Fork #2 bridges are constructed entirely of timber, while the other bridges consist of steel trusses with timber approach spans.

We understand that the primary reason for replacing the bridges is the age of the existing structures. The lengths of the replacement bridges will be about the same as the existing bridges, although the locations of the piers may change. The general design scope for each bridge project consists of evaluation of alternative foundation designs, structural design and preparation of contract plans and specifications. The replacement bridges will be primarily single and multi-span double-T precast concrete girder structures with typical span lengths of about 60 feet. Longer spans will be bulb-T precast concrete. We anticipate that some of the replacement bridges will be supported entirely on pile foundations, while others will be supported on a combination of spread and pile foundations. Existing grades and alignments will be maintained for the new Jacobsen, Menlo South Fork #2 and Woodard Landing bridges, while

the Hanen Bridge alignment will be changed to a true right angle crossing of the Willapa River. Final alignments and grades for the new Bullard and Church bridges have not yet been determined.

SCOPE

The purpose of our services is to explore subsurface soil conditions at each site as a basis for developing foundation support recommendations for each bridge structure. Our specific scope of services includes:

1. Attendance at meetings with the County and Sargent Engineers design teams to discuss the project and to review available subsurface and construction information on file with the Pacific County Public Works Department.
2. Review of available topographic and geologic information for each of the bridge sites.
3. Drilling one to four borings at each of the bridge sites from the existing bridge decks or approaches using truck-mounted and light-weight skid-mounted drilling equipment.
4. Conducting laboratory testing to evaluate pertinent engineering properties of the soils encountered.
5. Developing capacity-penetration relationships, including allowable downward, uplift and lateral capacities for appropriate types of piling.
6. Developing recommendations for shallow foundation support, as appropriate, including bearing capacity, settlement estimates, minimum footing embedment and width requirements and lateral resistance.
7. Commenting on scour potential relative to river hydraulics as it affects each foundation.
8. Recommending pile driving criteria for pile installation.
9. Evaluating the magnitude and rate of settlement of any new approach fills and recommending ways to minimize postconstruction fill settlements, if appropriate.

10. Preparing a written report summarizing our recommendations for each bridge site and presenting the results of our field explorations.

SITE CONDITIONS

GENERAL

Subsurface conditions were explored by drilling one to four borings at each bridge site to depths ranging from 2 to 74 feet. Boring locations were selected based on discussions with Sargent Engineers and are typically at planned pier locations. Boring locations are shown on the individual bridge Site Plans, Figures 2 through 7. A description of the field exploration and laboratory testing procedures and the logs of the borings are presented in the Appendix. Survey information presented on construction drawings provided by Pacific County was used to estimate ground surface elevations at some of the boring locations. The remainder of the boring elevations were referenced to bridge deck levels.

For purposes of discussion, the bridge abutments are referred to as left and right when looking downstream.

JACOBSEN BRIDGE

The Jacobsen Bridge is located in Section 29, Township 15N, Range 11W on Jacobsen Road. The existing 22-foot-long single-span timber bridge crosses over Drainage Ditch No. 1 in a level, lowlying area. Concrete mud sills support the existing bridge; these are being undermined by scour.

Boring J-1 was drilled in the roadway off the bridge near the right abutment, as shown in Figure 2. The boring encountered 2 feet of loose silty sand fill over 5 feet of interlayered loose sand and soft peat. Underlying the interlayered soils is a deposit of medium dense to dense sand which extends to the bottom of the boring at 44 feet. The deposit grades to dense at 28 feet. Ground water was encountered at a depth of 6-1/2 feet during drilling. We expect that the ground water level fluctuates seasonally with precipitation and with the level of Drainage Ditch No. 1.

WOODARD LANDING BRIDGE

The Woodard Landing Bridge is a 100-foot-long steel pony truss with a 21-foot timber approach. The bridge is located in Section 27, Township 14N, Range 8W on the Monohan Landing Road in Willapa, and crosses over Wilson Creek, a tidal estuary. Based on construction drawings provided by Pacific County, the left abutment is supported on a stepped spread footing bearing on siltstone bedrock. Both the intermediate pier and right abutment are supported on timber piles.

Figures 3 shows the locations of Borings W-1 and W-2 drilled at the left and right abutments, respectively. Boring W-1 encountered 11-1/2 feet of loose silty sand fill, underlain by a 5-1/2-foot-thick layer of medium dense silty sand and stiff silt. Weathered siltstone was encountered below the sand and silt layer at a depth of 17 feet, or at Elevation 101-1/2 feet. Unweathered siltstone was encountered at about 21 feet, or at Elevation 96-1/2 feet. The boring was terminated 1-1/2 feet into the unweathered siltstone.

Boring W-2 was drilled through the bridge deck between the intermediate pier and right abutment. The boring encountered fine-grained alluvium consisting of soft sandy silt and loose silty sand with varying amounts of organic matter. This deposit extends to about Elevation 74 feet, and is underlain by a layer of dense to very dense silty sand.

Ground water was not encountered in the borings during drilling, although the soil samples in Boring W-2 were saturated. We expect that the ground water level is close to river level which is expected to fluctuate with tide cycles and precipitation.

BULLARD BRIDGE

The Bullard Bridge is located in Section 52, Township 13N, Range 8W on Bullard Road. The existing bridge consists of a 100-foot steel pony truss main span with a 45-foot timber approach span at the right abutment and a 78-foot timber approach span at the left abutment. The bridge crosses the Willapa River at a skew angle. Existing foundations consist of mud sills for the right abutment approach span, spread footings for the

intermediate piers, and timber piles for the left abutment approach span. Scour has occurred in the right bank behind the intermediate pier, exposing siltstone bedrock. Several springs were observed above the siltstone.

Four borings were drilled for the bridge at the locations shown in Figure 4. Boring B-1 was drilled a short distance north of the right abutment and encountered 2 feet of silty gravel and sand fill. The fill is underlain to a depth of 16 feet by medium stiff silt and sandy silt, which in turn is underlain by dense silty gravel with sand. Siltstone bedrock underlies the gravel at a depth of 20 feet, or at Elevation 83 feet.

Borings B-2 and B-3, drilled near the existing main span piers, encountered shallow siltstone bedrock. In Boring B-3, the rock was covered by 2-1/2 feet of loose silty sand. Boring B-4 was drilled through the approach span deck and encountered alluvium consisting of loose silty sand and soft sandy silt. Siltstone bedrock was encountered at a depth of 21 feet, or at Elevation 70 feet.

Ground water was encountered at depths of 16 and 11 feet in Borings B-1 and B-4, respectively. Borings B-2 and B-3 were drilled at or within the river channel. We expect that ground water levels will fluctuate seasonally and with stages of the Willapa River.

CHURCH BRIDGE

The Church Bridge is located on Trask Road in Section 27, Township 13N, Range 10W. The existing bridge is a 186-foot-long, multi-span timber trestle supported on timber piles. The bridge crosses the South Fork of the Palix River, a tidal estuary. Three borings were drilled for this bridge at the locations shown in Figure 5. Borings C-1 and C-2 were drilled near the existing abutments and encountered 4 to 7-1/2 feet of silty gravel fill. A deposit of soft silt underlies the fill in Borings C-1 and C-2 and the mudline in Boring C-3, which was drilled near the bridge center. The silt grades to stiff in the borings.

A unit of hard silt was encountered at depths ranging from 28-1/2 to 62 feet, corresponding to elevations ranging from Elevation 36 feet to Elevation 47 feet. The borings were terminated within the hard silt.

Ground water levels encountered during drilling were erratic, probably as a result of the low permeability of the silt. We expect that ground water levels fluctuate seasonally and, to a lesser extent, with tide levels in the river channel.

MENLO SOUTH FORK #2 BRIDGE

The Menlo South Fork #2 Bridge crosses over Rue Creek and is located in Section 9, Township 13N, Range 8W. The existing bridge is a 49-foot-long timber span with two intermediate supports. The left bank has been significantly attacked by scour. A construction drawing provided by Pacific County indicates that the right abutment and right intermediate pier are supported on piles but were originally planned to be on concrete mud sills. The left abutment and left intermediate pier are supported on concrete mud sills.

Figure 6 shows the locations of Borings M-1 and M-2, drilled at the abutments of the existing bridge. Both borings encountered 4 to 6-1/2 feet of fill consisting of loose sandy gravel and medium stiff silt. Boring M-1 encountered a layer of loose silty sand and soft sandy silt to a depth of 11-1/2 feet. Below the silt, a 2-foot-thick layer of dense silty sand was encountered overlying siltstone bedrock. The bedrock surface is at Elevation 87 feet. Six feet of weathered siltstone changing to unweathered siltstone underlies the fill in Boring M-2. The siltstone changed to unweathered at about Elevation 90 feet.

Ground water was encountered at a depth of 11-1/2 feet in Boring M-1. No ground water was observed during the drilling of Boring M-2. We expect that ground water levels will fluctuate seasonally in response to precipitation and levels of Rue Creek.

HANEN BRIDGE

Hanen Bridge is located at the east end of Hanen Road in Section 1, Township 12N, Range 8W, and crosses over the Willapa River. The existing bridge is a 100-foot-long steel truss with a 23-foot timber approach span.

A construction drawing provided by Pacific County indicates that the left abutment and intermediate pier are supported on timber mud sills, while the right abutment is supported on a shallow footing bearing on siltstone bedrock. Siltstone bedrock is exposed in the bank below the right abutment.

Borings H-1, H-2 and H-3 were drilled at the locations shown in Figure 7. Boring H-1 encountered 6 feet of silty gravel alluvium over siltstone bedrock. The bedrock surface is at Elevation 100 feet. (The bridge deck level is indicated at Elevation 106 in the drawing.) Boring H-2 was drilled adjacent to the intermediate pier and encountered 9-1/2 feet of loose silty gravel with sand over siltstone bedrock. Boring H-3 encountered 6-1/2 feet of loose silty gravel fill over loose sandy alluvium to a depth of 23 feet. Siltstone bedrock was encountered below the alluvium. The siltstone was encountered at Elevation 83 feet in both Borings H-2 and H-3. Hand probes accomplished by Pacific County personnel within several feet north of the intermediate pier confirm that the bedrock surface is at a relatively uniform elevation in the left bank of the river.

Ground water was not encountered in Boring H-1. Ground water was encountered at 6 feet and 23 feet in Borings H-2 and H-3, respectively. Seasonal fluctuations in precipitation and stages of the Willapa River are expected to affect ground water levels.

CONCLUSIONS AND RECOMMENDATIONS

GENERAL

The subsurface conditions at the bridge sites vary significantly, even along individual bridge alignments. In our opinion, pile foundation support should be considered for all piers and abutments of the replacement Jacobsen, Woodard Landing, and Church Bridges. The Bullard, Menlo South Fork #2 and Hanen Bridges should be supported on a combination of deep foundations and shallow foundations bearing on siltstone bedrock or dense soil. Spread foundations within river channels must be protected from being undermined by scour. A short drilled shaft is recommended for the intermediate pier of the Hanen Bridge.

We have evaluated 12-3/4-inch-diameter steel pipe piles for use at the various bridge sites. This pile type has been used for previous bridge projects by Pacific County.

Foundation support recommendations are discussed on a bridge-specific basis in the following sections. General recommendations for scour, approach sections and retaining walls are given in subsequent sections.

FOUNDATION SUPPORT

Jacobsen Bridge: We recommend that the abutments for the replacement single-span bridge be pile-supported due to the significant thickness of compressible soils encountered in Boring J-1 and expected at the left abutment. The piles should penetrate the upper soft soils and medium dense sand into the dense sand encountered at a depth of about 25 feet, or about Elevation 75 feet. The consistency of the sand unit may vary along the bridge alignment, therefore we recommend that the project plans and specifications provide a contingency for variability in pile lengths.

We recommend using a design capacity of 50 tons for downward loading for 12-3/4-inch-diameter steel pipe piles with a wall thickness of 3/8 inch. For planning pile lengths, we recommend that the piles be assumed to penetrate 40 feet below the existing roadway surface. The capacity value is applicable for the total of dead and long-term live loads and may be increased by one-third when considering design loads of short duration such as wind or seismic forces.

The allowable capacity is based on the strength of the supporting soils for the penetration indicated and includes a factor a safety of 2.5 for both end bearing and side friction. The structural characteristics of pile materials and foundation connections may impose more stringent limitations and should be evaluated during design. For example, column buckling may limit the design capacity of piles. We estimate the depth of pile fixity at 16 feet below the mudline or the ground surface.

We estimate that settlement of pile foundations designed using the above axial pile capacity will be on the order of 1/2 inch or less. Most of the settlement will occur as load is applied. Postconstruction differential settlements between pile-supported foundation elements are expected to be negligible.

Pile downdrag forces develop when surrounding compressible soil and any overlying fill settles relative to a pile, thus interacting with and adding load to the pile. The amount of downdrag at the Jacobsen Bridge will be minimal if existing approach grades are maintained or are less than 2 feet above existing approach grades.

Uplift pile capacity develops from side friction between the pile and adjacent soil. We recommend an allowable uplift capacity of 30 tons for a pile which penetrates 40 feet below existing roadway grade. This value includes a factor of safety of 2.0.

Lateral resistance to wind or seismic loading can be developed by passive resistance in the adjacent soils acting on the upper portions of the piles, pile caps, grade beams or below-grade walls. Passive pressure on the face of below-grade elements may be computed on the basis of an equivalent fluid density of 200 pounds per cubic foot (pcf), assuming that compacted structural fill is used around these elements. This value includes a factor of safety of 1.5.

The contribution to lateral resistance of vertical piles will be limited because the upper soils have low strength. We recommend that the allowable lateral load on the 12-3/4-inch pipe piles be limited to 8 kips. This lateral capacity assumes a center-to-center pile spacing of at least three pile diameters, pile head fixity against rotation, and a maximum pile head deflection of about 1/2 inch. Batter piles should be used if greater lateral resistance is required.

Pipe piles should be driven closed-end and should be visually inspected, then filled with concrete following driving. We recommend that the piles be installed with a pile-driving hammer having a minimum rated energy of at least 25,000 foot-pounds per blow. To develop the indicated downward capacity, the piles should be driven to the penetration indicated or to refusal, whichever occurs first. Refusal criteria are dependent on

the driving hammer characteristics, capacity required, group action, and other details. When identified, we can analyze these characteristics to evaluate appropriate refusal criteria. We recommend that piles which meet refusal 5 feet or more above the recommended penetration be evaluated for possible reduced capacity.

It should be noted that the recommended pile penetration and allowable capacities presented above are based on assumed uniformity of soil conditions. There may be variations in the depth to, and relative density of, the supporting soils. Accordingly, we recommend that the pile installation be monitored by a member of our staff who would observe installation procedures, maintain driving records, and evaluate the adequacy of each pile.

Woodard Landing Bridge: A single-span concrete structure is planned to replace the existing bridge. The left abutment will be located in approximately the same position as the existing left abutment, while the replacement right abutment location is planned between the existing intermediate pier and right abutment. The approach fill will need to be extended approximately 10 feet toward the river.

We recommend that both abutments for the replacement span be pile-supported due to the thickness of soft and loose soils at both locations. The piles at the left abutment should penetrate the loose fill, the alluvial soils, and weathered siltstone to attain end-bearing on siltstone bedrock encountered at about Elevation 96-1/2 feet in Boring W-1. Piles at the right abutment should similarly extend into the dense to very dense sand encountered at about Elevation 74 feet in Boring W-2.

Project plans and specifications should include a contingency for variability in pile lengths due to variations in the depth to and consistency of the supporting soil and rock strata. We expect that penetrations into these strata could range from 2 to 10 feet. For planning pile lengths, we recommend that the piles be assumed to penetrate 5 feet into these strata.

An axial downward capacity of 50 tons may be used for 12-3/4-inch-diameter steel pipe piles. All piles should be driven to the refusal criteria discussed subsequently to achieve the 50 ton capacity. Pile capacity values may be increased by one-third for short-term live loads as discussed for the Jacobsen Bridge. Factor of safety and structural considerations are also the same as for the Jacobsen Bridge. Depth of fixity may be taken as 15 feet for piles at the left abutment and 18 feet for piles at the right abutment. Pile settlements will be about 1/2 inch or less and will occur primarily as load is applied. Downdrag is expected to be minimal, even at the right abutment where the existing approach fill will be extended southward. Uplift capacities of left and right abutment piles will be about 20 tons and 15 tons, respectively, with a factor of safety of 2.0.

Passive and lateral pile resistance at both abutments should be based on the same recommendations given for the Jacobsen Bridge.

Piles for the Woodard Landing Bridge should be driven closed-end, visually inspected after driving and filled with concrete. The piles should be driven to practical refusal with a hammer having a minimum rated energy of 25,000 foot-pounds per blow. Pile depths will likely be variable because of sloping of the siltstone surface and variations in the consistency of the siltstone and dense sand. Refusal criteria are based on the hammer characteristics, group action, type and length of pile, and other factors, When the driving equipment has been identified, we should be retained to establish appropriate refusal criteria. The recommended 50-ton vertical capacity should be verified using dynamic pile driving criteria based on a minimum number of blows for the last 3 inches of driving. Additional driving should be discontinued to avoid overstressing the piles.

We recommend that a representative of our firm monitor pile installation to verify that the piles are installed within the intent of our recommendations and in accordance with the plans and specifications. If piles do not achieve the minimum depth recommended, they should be

evaluated for possible reduced capacity. The project structural engineer should then provide direction regarding the installation of supplemental piles, if needed.

Bullard Bridge: The new Bullard Bridge will be a multi-span concrete structure with 50- to 60-foot-long spans. We understand that realignment of the approaches is under consideration. Foundation support conditions vary along the bridge alignment due to variable thicknesses of the alluvial deposit over the siltstone bedrock. Bedrock is at or slightly below the mudline in the river bottom and in the right bank, while the depth to bedrock exceeds 15 feet at the right and left abutments and along most of the approach on the left bank. Accordingly, we recommend that the replacement abutments and the left bank approach be pile-supported. The main span piers should be supported on shallow foundations bearing on siltstone within the river channel.

Pile foundation recommendations for the left abutment of the Woodard Landing Bridge are considered appropriate for the replacement right abutment of the Bullard Bridge. Dense silty gravel and siltstone bedrock were encountered at depths of 16 and 20 feet, respectively, in Boring B-1; thus, we expect pile lengths to range between 18 and 25 feet. Similarly, the recommendations for pile foundations at the right abutment of the Woodard Landing Bridge are considered applicable to the left abutment and left bank approach of the Bullard Bridge. Depth to bedrock increases on the left bank away from the river, thus, the embedded lengths of the piles will vary significantly. The construction drawing provided by Pacific County indicates that the bedrock surface elevation is relatively uniform along the left bank approach alignment.

No data is available on the existing downcutting of the river channel bottom. Our recommendation for footing embedment is based on our engineering judgment and experience. Spread footings for support of piers underlain by shallow bedrock should be keyed a minimum of 3 feet into the bedrock for scour protection and should be stepped if necessary to accommodate a sloping bedrock surface. The concrete should be poured neat against the excavation.

Spread footings may be designed for an allowable bearing pressure of 8 ksf (kips per square foot). This value may be increased by one-third when considering wind or seismic loads. We recommend a minimum footing width of 3 feet. We expect that total and differential settlements for footings founded on siltstone bedrock will be less than 1/2 inch. Most of this settlement will occur during construction.

Care should be taken to clean the bearing surface of loose and disturbed material just before pouring of concrete. A thin layer of grout or concrete may be poured in the bottom of the excavation to prevent softening during steel placement. We recommend that the condition of the footing subgrade be observed by a qualified geotechnical engineer prior to concrete placement to confirm that the bearing surface has been adequately prepared.

Lateral loads may be resisted by friction at the base of the footings using a coefficient of friction of 0.3 applied to the net vertical loads. This coefficient includes a factor of safety of about 1.5. Additional lateral resistance may be available from passive resistance in the portion of the footing embedded in rock, depending on footing and bedrock surface geometry. We should be retained to provide recommendations for passive resistance, if required.

Construction of spread footings in the river may require a cofferdam and dewatering system depending on location relative to river level. We expect that a cofferdam consisting of steel sheet piles driven a short distance into the siltstone will be necessary. Excavation in the upper 2 to 3 feet of siltstone bedrock can likely be accomplished using jackhammers. Hydraulic splitters may be necessary if deeper rock excavation is required.

Church Bridge: A multi-span concrete structure with 50- to 60-foot spans is planned. We recommend that the entire bridge be supported on piles because of the compressible silt encountered in all three borings. The silt extends to depths of 53 to 63 feet below the existing bridge deck, and is underlain by hard silt. The piles should penetrate into this

hard silt layer. The variable surface elevation and consistency of the hard silt will likely result in variations in pile lengths along the alignment.

We expect that pile depths to obtain a 50 ton downward capacity for 12-3/4-inch-diameter pipe piles will range between 55 and 65 feet below the existing bridge deck. However, all piles should be driven to refusal criteria developed in accordance with the recommendations given for the Jacobsen Bridge. Other design considerations for the piles, such as factor of safety, temporary increase in capacity and structural aspects are also similar to those discussed for the Jacobsen Bridge.

We estimate that pile settlements will be about 1 inch or less and should occur primarily as load is applied. Uplift pile capacity may be taken as 25 tons, which includes a factor of safety of about 2.0.

A lateral pile capacity value of 6 kips may be used for the 12-3/4-inch pipe piles. Otherwise, the lateral resistance recommendations given for the Jacobsen Bridge are considered applicable for the Church Bridge.

Menlo South Fork #2 Bridge: A 56-foot-long concrete single-span structure will replace the existing bridge. The replacement bridge may be satisfactorily supported on a spread footing at the left abutment and on 12-3/4-inch-diameter pipe piles at the right abutment.

The left abutment footing may be founded on the weathered siltstone approximately 4 feet below the existing road grade or on siltstone bedrock at 10 feet depth. A spread footing supported on the weathered siltstone may be designed using an allowable bearing pressure of 5 ksf. A spread footing supported on siltstone bedrock may be designed using an allowable bearing pressure of 8 ksf. These values may be increased by one-third when considering earthquake or wind loads. We recommend that a minimum footing width of 3 feet be used.

Total and differential settlements of footings supported on the weathered siltstone are expected to be 1 inch or less. Settlements in siltstone bedrock are expected to be 1/2 inch or less. Most of the estimated settlements will occur during construction. The same precautions described for construction of spread footings at the Bullard Bridge are relevant at the Menlo South Fork #2 Bridge.

Lateral loads may be resisted by friction at the base of the footings using a coefficient of friction of 0.3 applied to the net vertical loads. This coefficient includes a factor of safety of about 1.5. Additional lateral resistance is available from passive pressure on the face of the embedded portion of the footing. Passive pressure may be computed on the basis of an equivalent fluid density of 200 pounds per cubic foot, assuming a level ground surface adjacent to the footing and use of compacted granular fill against the footing. This value includes a factor of safety of 1.5.

Support for piles at the right abutment will be derived primarily from end bearing in the siltstone bedrock encountered at about Elevation 87 feet in Boring M-1. Pile foundation recommendations for the left abutment of the Woodard Landing Bridge are considered appropriate for the new right abutment of the Menlo South Fork #2 Bridge, except that: (1) pile depths below the existing roadway surface will likely vary between 15 and 20 feet; (2) the pile fixity depth should be taken as 15 feet; and (3) uplift capacity should be limited to 10 tons.

Hanen Bridge: The replacement bridge will consist of an 85-foot concrete main span and a 45-foot concrete approach span from the left bank. Slight realignment is planned. Foundation conditions vary significantly along the alignment. We conclude that pile foundation support is appropriate for the left abutment, and spread footing support for the right abutment. A drilled shaft foundation is being considered for support of the intermediate pier.

Piles for the left abutment will penetrate loose granular fill and native soils and extend into the siltstone bedrock encountered at Elevation 83 feet in Boring H-3. Recommendations for support of the left abutment of the Woodard Landing Bridge are applicable for the replacement left abutment of the Hanen Bridge.

The right abutment may be supported on a spread footing bearing on siltstone bedrock encountered at Elevation 100 feet in Boring H-1. The footing may be designed on the basis of an allowable bearing pressure of 8 ksf. This value may be increased by one-third for wind or seismic loading. We recommend a minimum footing width of 3 feet and a minimum embedment depth of 2 feet. The footing should be embedded deep enough such that a minimum horizontal distance of 5 feet is provided between the slope below the right abutment and the edge of the footing. Footing settlements should be less than 1 inch, provided that the subgrade is satisfactorily prepared as recommended in previous sections.

Lateral loads can be resisted by base friction using a coefficient of friction of 0.3 applied to the net vertical loads. Additional lateral resistance in the uphill (landward) direction is available from passive resistance on the face of the footing. Passive resistance can be computed on the basis of an equivalent fluid density of 200 pcf, assuming compacted granular fill is placed against the face of the footing.

The siltstone bedrock was encountered at about Elevation 83 feet in the vicinity of the intermediate pier location. The bedrock surface is relatively uniform in this area, based on our borings and hand probes by Pacific County personnel. A drilled shaft is planned for support of the intermediate pier and will extend through the overlying loose gravelly soils. The shaft will be constructed by excavating from within a large diameter casing that will be progressively driven down to the bedrock surface.

The drilled shaft may be sized on the basis of an allowable bearing value of 8 ksf, assuming a minimum embedment depth of 3 feet into the siltstone bedrock. This value applies to the total of dead plus long-term live loads exclusive of the weight of the drilled shaft. An increase of up to one-third may be made when considering wind or seismic forces.

We estimate that the total settlement of the drilled shaft will be less than 1 inch. We expect that postconstruction settlements will be less than 1/2 inch. Drilled shaft settlements are expected to occur rapidly as loads are applied.

Uplift capacity for the portion of the shaft embedded in granular alluvium should be ignored. A unit shaft resistance of 5 ksf may be used for the portion of the shaft embedded in the siltstone bedrock.

Lateral resistance will be provided by the portion of the shaft embedded in the siltstone bedrock. Passive resistance on the side of the shaft may be computed on the basis of a uniform lateral pressure of 10 ksf applied beginning at 2 feet below the top of the siltstone and taken over a width of two times the shaft diameter. Allowable frictional resistance at the base of the shaft may be computed using a coefficient of friction of 0.5 applied to the net vertical loads. The passive pressure and friction coefficients both include a factor of safety of about 1.5.

SCOUR PROTECTION

Scour protection is appropriate for the spread footings at the Bullard Bridge. Some protection may also be appropriate for the left abutment footing of the Menlo South Fork #2 Bridge, depending on footing and slope geometry. The minimum embedment depth for these foundations should be 3 feet into the siltstone bedrock. These foundations should be protected on all sides by a berm of riprap extending 5 feet in all directions from the pier and having a thickness of 4 feet at the pier face. The riprap should consist of sound, durable quarry rock ranging in size from 6 to 24 inches in least dimension. The average size should be 18 to 20 inches in least dimension.

APPROACH SECTIONS

General: The surficial soils at each of the bridge sites contain a significant percentage of fines (material passing the No. 200 sieve) and become difficult to compact and grade when wet. We recommend that all site preparation and earthwork activities related to bridge construction be accomplished during the normally dry months from June to September when the moisture content of the surficial soils can be more easily controlled.

Site Preparation: We recommend that all vegetation and major root systems be removed from new fill areas in approach sections. The clearing should be followed by stripping of any forest duff and organic surficial soils. We estimate that the depth of stripping required will average about 12 inches and range from about 6 to 18 inches. The surface exposed following stripping should be thoroughly proofrolled with heavily-loaded, rubber-tired construction equipment. Any soft, loose or otherwise unsuitable zones disclosed by proofrolling should be repaired or removed and replaced with clean structural fill compacted to at least 95 percent of the maximum dry density determined in accordance with ASTM D-1557. The depth of excavation and replacement should extend to firm bearing or to 2 feet, whichever is less.

Fill Material and Placement: All new fill should be placed as compacted structural fill. The fill should be placed in horizontal lifts not exceeding 10 inches in loose thickness and each lift thoroughly compacted to at least 95 percent of the maximum dry density determined in accordance with ASTM D-1557. The moisture content of the fill material should be adjusted as necessary to achieve the required degree of compaction.

The fill material should be free from debris, organic contaminants or cobbles larger than 6 inches. The suitability of material for use as fill will depend on the gradation and moisture content of the soil. As the amount of fines (material passing the No. 200 sieve) increases, soil becomes increasingly more sensitive to small changes in moisture content and adequate compaction becomes more difficult to achieve. We recommend the use of clean pit run sand and gravel or 6-inch minus crushed rock having less than 5 percent fines by weight relative to the portion of the material passing the 3/4-inch sieve. Existing site soils at the bridge sites generally have a significant fines content. These soils are moisture-sensitive and will be difficult to compact during wet weather. We recommend that they be used as structural fill only during periods of prolonged dry weather when they can be properly conditioned for compaction.

We recommend that a representative from our firm observe the proofrolling of subgrade areas and the placement of structural fill. An adequate number of in-place density tests should be performed in the fill to evaluate whether the desired degree of compaction is being achieved.

Settlement: We estimate that the settlement resulting from the placement of each 5-foot increment of fill for the approaches will be on the order of 1/2 inch. Most of this settlement is expected to occur as load is applied. Some long-term differential settlement may occur, however, between the approach fills and the abutments. Therefore, it may be necessary to periodically repave or patch the portions of the roadway adjacent to the abutments to relevel this area.

Cut and Fill Slopes: Temporary cut slopes in general should be inclined at 1-1/2:1 (horizontal to vertical) or flatter. Steeper cut slopes (up to 1:1) may be used where more competent materials such as dense granular soils or weathered bedrock are encountered. Near-vertical cuts may be used in unweathered bedrock. We recommend fill slopes be inclined at 2H:1V. Permanent cut slopes should typically be inclined at no steeper than 2-1/2H:1V in the silt and silty sand soils. Protection of cut and fill slopes from erosion should be provided promptly by means of revegetation, hydroseeding or other methods.

ABUTMENT RETAINING WALLS

Lateral Soil Pressures: The lateral soil pressures acting on abutment retaining walls will depend on the nature and density of the soil behind the wall, the amount of lateral wall movement which occurs as backfill is placed, and the inclination of the backfill surface. For walls that are free to yield at the top at least one thousandth of the height of the wall (i.e., wall height X .001), soil pressures will be less than if movement is restrained. We recommend that "free" walls supporting horizontal backfill be designed using an equivalent fluid density of 35 pounds per cubic foot (pcf), and restrained walls be designed using an equivalent fluid density of 55 pcf. The above-recommended lateral soil pressures do not include the effects of sloping backfill surfaces or

surcharges such as traffic loads or other surface loading. Sloping backfill and surcharge effects should be considered, as appropriate.

Backfill: All backfill for retaining walls should consist of clean sand or sand and gravel compacted as described under **APPROACH SECTIONS.** Measures should be taken to prevent the buildup of excessive lateral soil pressures due to overcompaction of the backfill behind the wall. This may be accomplished by placing the backfill located within 24 inches of the wall in lifts not exceeding 8 inches in loose thickness and compacting this zone with a hand-operated or small self-propelled, vibrating plate compactor.

Drainage: Permanent drainage systems should be provided to collect water and prevent the buildup of hydrostatic pressure against retaining walls. We recommend that these drainage systems consist of a zone of free-draining backfill against the back of the wall. The free-draining backfill should consist of sand or sand and gravel containing no more than 5 percent by weight of silt or clay fines of that portion of the backfill which passes a 3/4-inch sieve. In addition, drainpipe having a minimum diameter of 4 inches should be placed in the granular material at the base of walls for the entire length. The drainpipe should be corrugated metal or rigid PVC, not the flexible ADS variety. The pipe should be sloped to drain by gravity and discharge should be disposed of properly so it does not cause erosion.

CONSTRUCTION MONITORING

We recommend that a representative of our firm be present during all phases of site preparation, earthwork, and foundation construction in order to confirm the expected soil conditions at each bridge, and to evaluate the suitability of the subsurface materials encountered for support of the anticipated loads. Our representative would observe the work to confirm our recommendations regarding site preparation, earthwork, and foundation construction and advise on the extent of any repairs to footing and embankment subgrades needed or identified by proofrolling. In addition, our representative would evaluate whether the desired degree of compaction of imported fill is being achieved by means

of density tests, and evaluate the suitability of proposed imported fill and riprap sources. We recommend that our representative be present during pile installation to evaluate the acceptability of each pile driven.

USE OF THIS REPORT

We have prepared this report for use by Sargent Engineers, Inc. and the Pacific County Department of Public Works in design of a portion of this project. The data and report should be provided to prospective contractors for their bidding or estimating purposes, but our report, conclusions and interpretations should not be construed as a warranty of the subsurface conditions.

When the design has been finalized, we recommend that the final design and specifications be reviewed by our firm to see that our recommendations have been interpreted and implemented as intended.

The scope of our services does not include services related to construction safety precautions and our recommendations are not intended to direct the contractor's methods, techniques, sequences or procedures, except as specifically described in our report for consideration in design.

The subsurface conditions were found to be variable at the bridge sites. A contingency for unanticipated conditions should be included in the budget and schedule. Sufficient monitoring, testing and consultation by our firm should be provided during construction to confirm that the conditions encountered are consistent with those indicated by the explorations, to provide recommendations for design changes should the conditions revealed during the work differ from those anticipated, and to evaluate whether or not earthwork and foundation installation activities comply with contract plans and specifications and the intent of our recommendations.

Within the limitations of scope, schedule and budget, our services have been executed in accordance with generally accepted practices in this area at the time the report was prepared. No other conditions, express or implied, should be understood.

GeoEngineers

We appreciate the opportunity to be of service to you on this project. Should you have any questions concerning this report or if we can provide additional services, please call.

Respectfully submitted,

GeoEngineers, Inc.

Herbert R. Pschunder
Project Engineer

Gordon M. Denby, P.E.
Associate

GORDON M. DENBY
STATE OF WASHINGTON
REGISTERED
PROFESSIONAL ENGINEER

HRP:GMD:cs

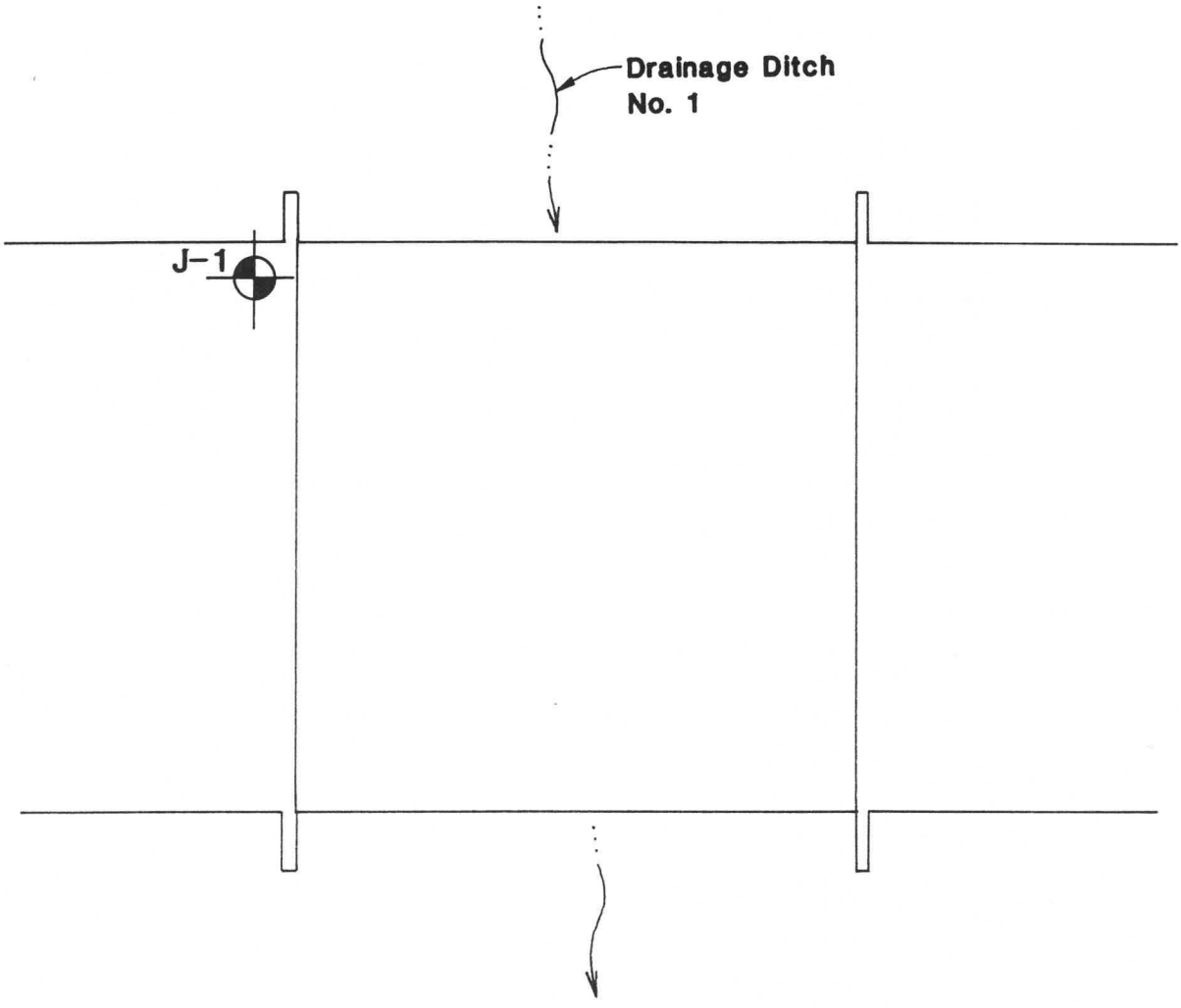

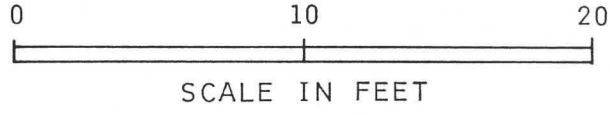

KEY:

J-1 BORING LOCATION AND NUMBER

Geo Engineers

SITE PLAN
JACOBSEN BRIDGE

FIGURE 2

1322-01-6 HRP:KKT 7-12-88

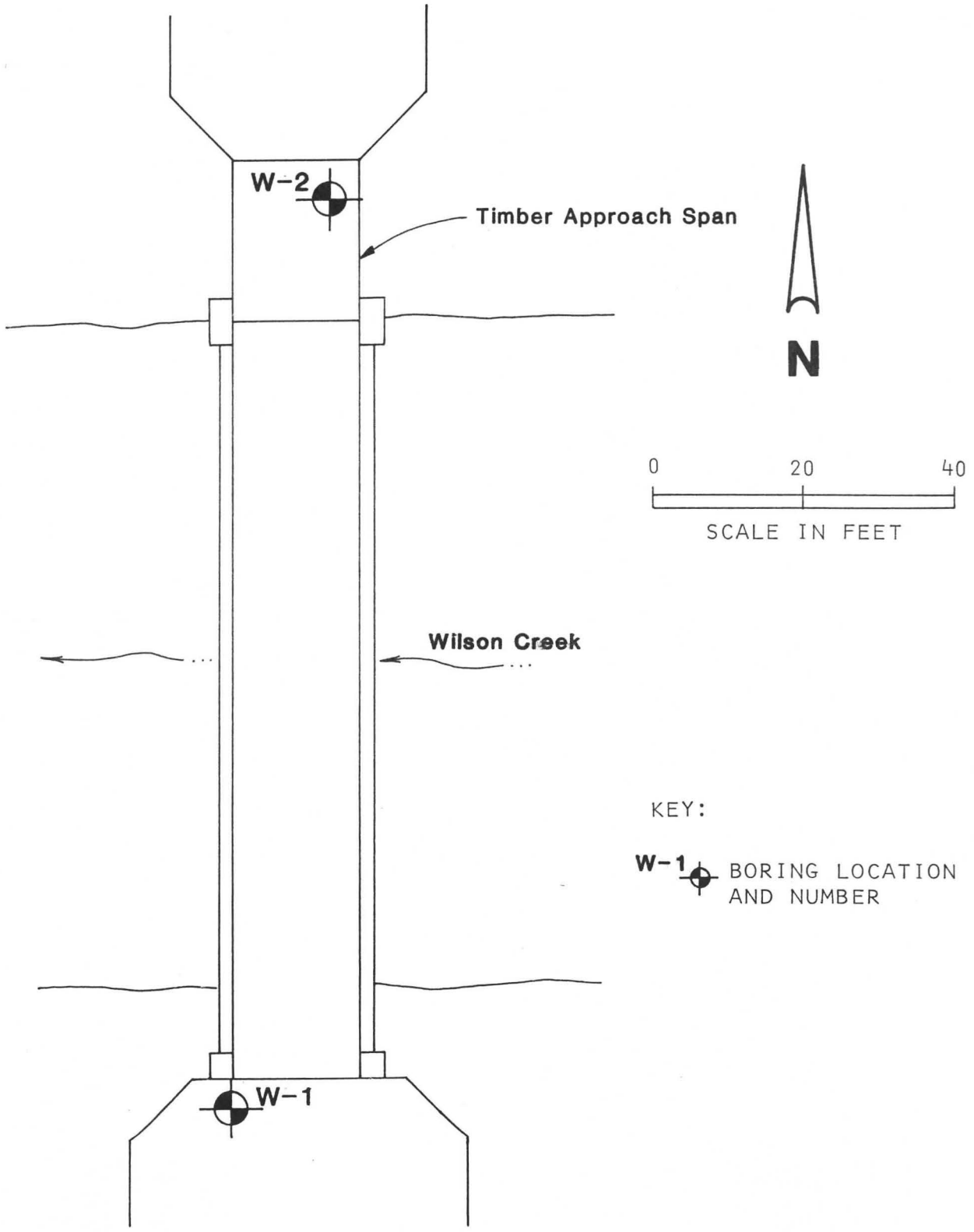

Geo Engineers

SITE PLAN
WOODARD LANDING BRIDGE

FIGURE 3

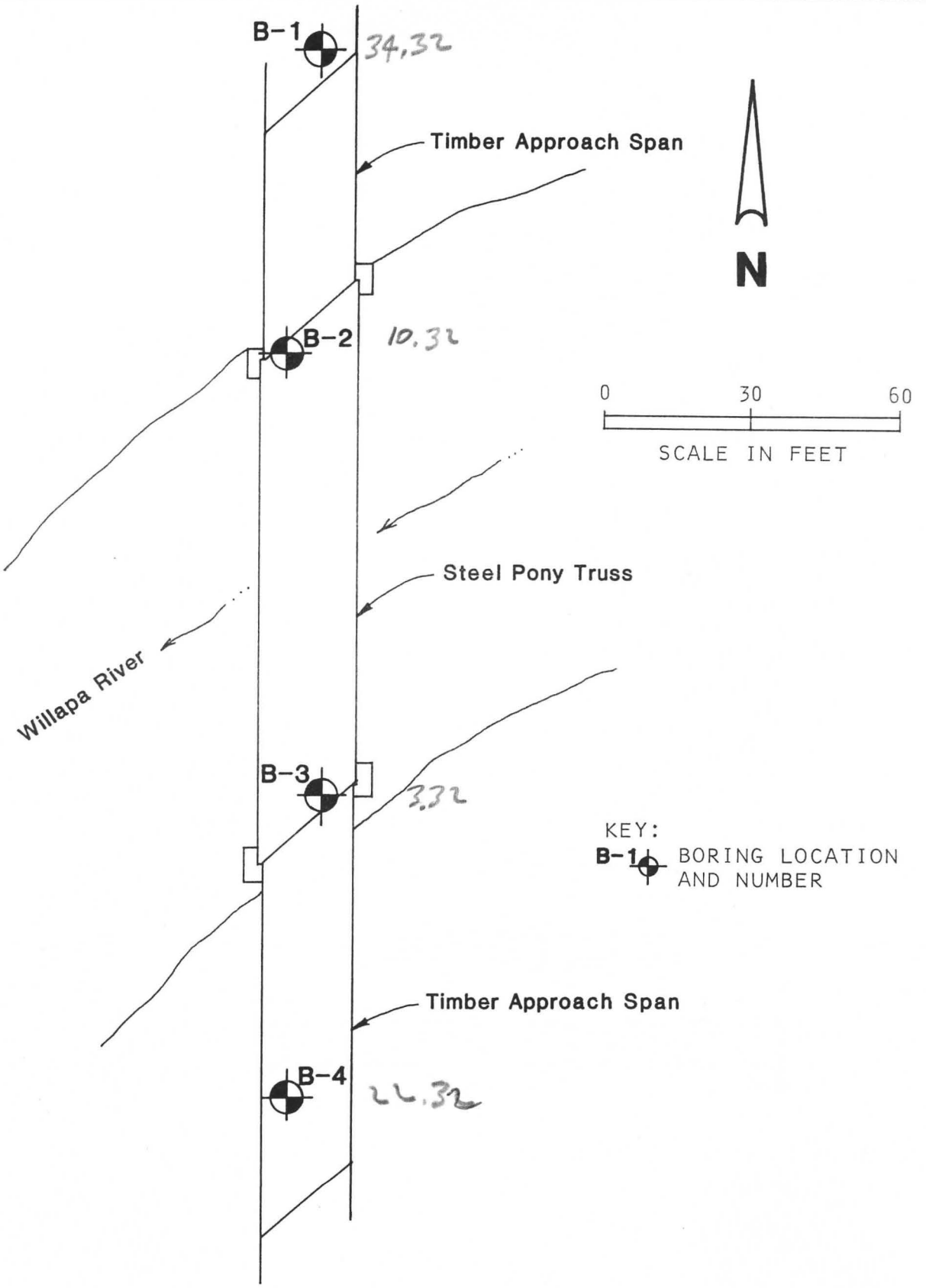

Geo Engineers

SITE PLAN
BULLARD BRIDGE

FIGURE 4

1322-01-6 HRP:KKT 7-12-88

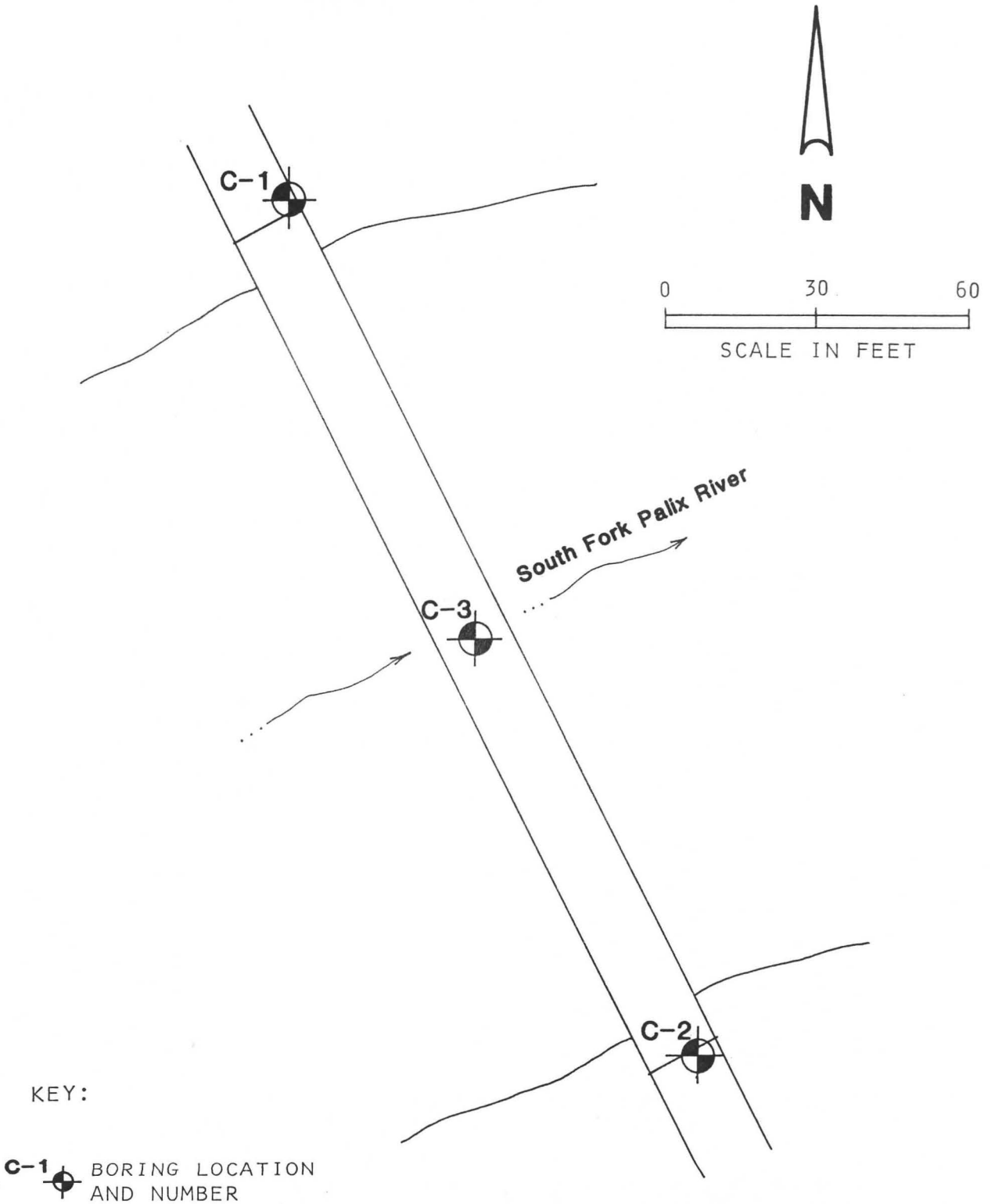

Geo Engineers

SITE PLAN
CHURCH BRIDGE

FIGURE 5

1322-01-6 HRP:KKT 7-12-88

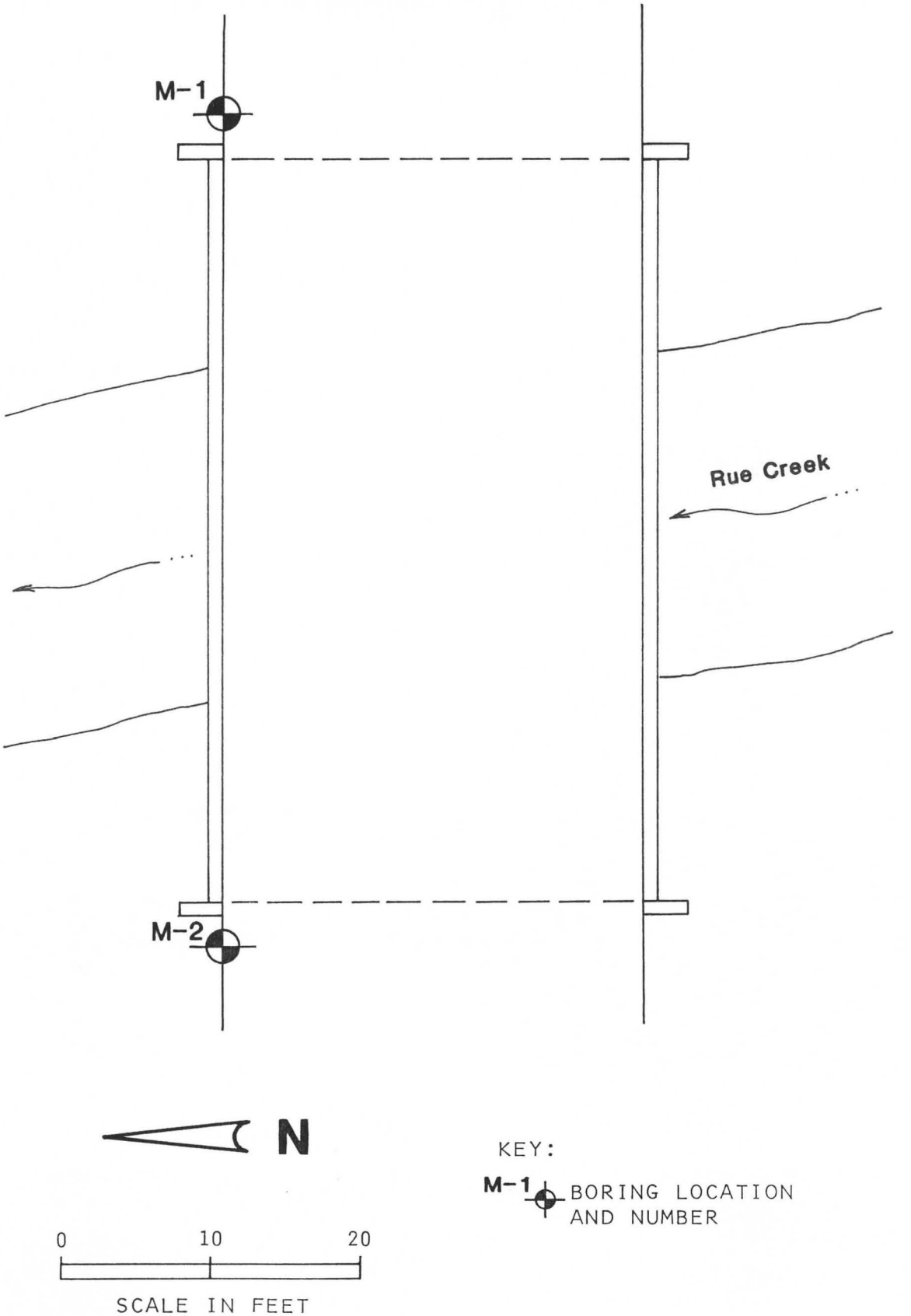

GeoEngineers

SITE PLAN
MENLO SOUTH FORK #2 BRIDGE

FIGURE 6

1322-01-6 HRP:KKT 7-12-88

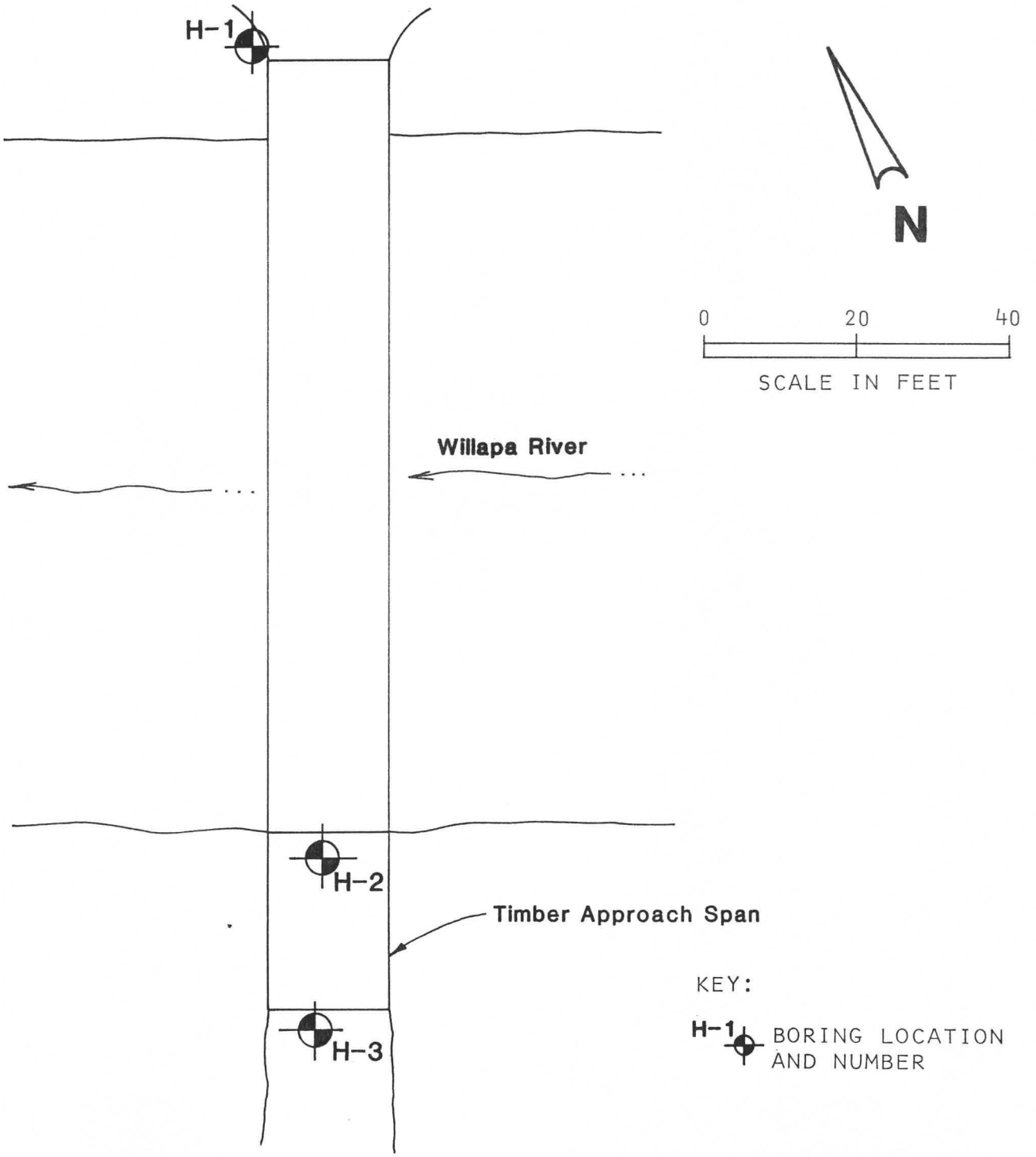

Geo Engineers

SITE PLAN
HANEN BRIDGE

FIGURE 7

1322-01-6 HRP:KKT 7-13-88

Geo Engineers

A P P E N D I X

APPENDIX

FIELD EXPLORATIONS AND LABORATORY TESTING

FIELD EXPLORATIONS

The subsurface soil and ground water conditions along the project alignments were explored by drilling 15 borings at the locations shown in Figures 2 through 7. The borings were drilled to depths ranging from 2 to 74 feet below mudline or roadway surface using a truck-mounted, continuous flight, hollow-stem auger drill. Boring B-1 at the Hanen Bridge was drilled with a small portable solid-stem auger rig. Representative samples were obtained of each soil and rock type encountered using a standard penetration test (SPT) split-spoon sampler. The sampler was driven into the soil or rock a distance of 18 inches or other specified distances using a 140-pound hammer free-falling 30 inches. Soils were visually classified in general accordance with the system described in Figure A-1. A key to the boring log symbols is provided in Figure A-2.

The borings were continuously logged by a geotechnical engineer from our firm who obtained representative samples and observed surface and ground water conditions. Logs of the borings are presented in Figures A-3 through A-20. The logs are based on our interpretation of the field and laboratory data and indicate the various types of subsurface materials encountered. They also indicate the depths at which the subsurface materials change, although the change may actually be gradual. If the change occurred between samples, it was interpreted.

Ground surface and deck elevations for the Woodard Landing, Bullard and Hanen Bridges were approximated from construction drawings for these existing bridges provided by the Pacific County Department of Public Works. Elevations on the boring logs refer to the datum given on these drawings. Elevations for the Jacobsen, Church and Menlo Bridges were based on an assumed datum, typically the existing bridge deck.

Borings drilled on land were abandoned in accordance with Washington State Department of Ecology (DOE) regulations.

LABORATORY TESTING

The samples obtained from the borings were brought to our laboratory for further examination and testing. Selected samples were tested to determine their moisture content. Results of the moisture content determinations are presented on the boring logs.

SOIL CLASSIFICATION SYSTEM

MAJOR DIVISIONS			GROUP SYMBOL	GROUP NAME
COARSE GRAINED SOILS MORE THAN 50% RETAINED ON NO. 200 SIEVE	GRAVEL MORE THAN 50% OF COARSE FRACTION RETAINED ON NO. 4 SIEVE	CLEAN GRAVEL	GW	WELL-GRADED GRAVEL, FINE TO COARSE GRAVEL
			GP	POORLY-GRADED GRAVEL
		GRAVEL WITH FINES	GM	SILTY GRAVEL
			GC	CLAYEY GRAVEL
	SAND MORE THAN 50% OF COARSE FRACTION PASSES NO. 4 SIEVE	CLEAN SAND	SW	WELL-GRADED SAND, FINE TO COARSE SAND
			SP	POORLY-GRADED SAND
		SAND WITH FINES	SM	SILTY SAND
			SC	CLAYEY SAND
FINE GRAINED SOILS MORE THAN 50% PASSES NO. 200 SIEVE	SILT AND CLAY LIQUID LIMIT LESS THAN 50	INORGANIC	ML	SILT
			CL	CLAY
		ORGANIC	OL	ORGANIC SILT, ORGANIC CLAY
	SILT AND CLAY LIQUID LIMIT 50 OR MORE	INORGANIC	MH	SILT OF HIGH PLASTICITY, ELASTIC SILT
			CH	CLAY OF HIGH PLASTICITY, FAT CLAY
		ORGANIC	OH	ORGANIC CLAY, ORGANIC SILT
HIGHLY ORGANIC SOILS			PT	PEAT

NOTES:

1. Field classification is based on visual examination of soil in general accordance with ASTM D2488-83.
2. Soil classification using laboratory tests is based on ASTM D2487-83.
3. Descriptions of soil density or consistency are based on interpretation of blowcount data, visual appearance of soils, and/or test data.

SOIL MOISTURE MODIFIERS:

Dry - Absence of moisture, dusty, dry to the touch

Moist - Damp, but no visible water

Wet - Visible free water or saturated, usually soil is obtained from below water table

GEI 85-88

Geo Engineers

SOIL CLASSIFICATION SYSTEM

FIGURE A-1

LABORATORY TESTS:

AL	Atterberg limits
CP	Compaction
CS	Consolidation
DS	Direct shear
GS	Grain-size analysis
HA	Hydrometer analysis
K	Permeability
M	Moisture content
MD	Moisture and density
SP	Swelling pressure
TX	Triaxial compression
UC	Unconfined compression
CA	Chemical Analysis

SOIL GRAPH:

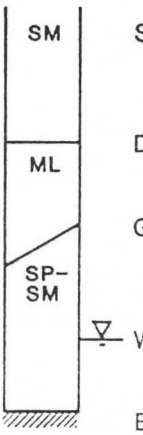

Soil Group Symbol (See Note 1)

Distinct contact between Soil Strata

Gradual Change between Soil Strata

Water Level

Bottom of Boring

BLOW-COUNT/SAMPLE DATA:

Blows required to drive Dames & Moore sampler 12 inches or other indicated distances using pound hammer falling inches.

"P" indicates sampler pushed with weight of hammer or hydraulics of drill rig.

22 ■	Location of relatively undisturbed sample
12 ⊠	Location of disturbed sample
P □	Location of sampling attempt with no recovery
10 ◪	Location of sample attempt using Standard Penetration Test procedures
40 ⬓	Location of relatively undisturbed sample using 140 pound hammer falling 30 inches.

NOTES:

1. Soil classification system is summarized in Figure A-1.
2. The reader must refer to the discussion in the report text as well as the exploration logs for a proper understanding of subsurface conditions.

GEI 86-88

Geo Engineers

KEY TO BORING LOG SYMBOLS

FIGURE A-2

BORING NO. J-1

Depth in Feet	Lab Tests	Moisture Content	Dry Density	Blow-Count	Samples	Group Symbol	Description (Surface Elevation: 100 feet*)
0						SM	ASPHALT CONCRETE, 2 INCHES THICK LIGHT BROWN SILTY FINE TO COARSE SAND WITH GRAVEL (LOOSE, MOIST) (FILL)
						SP	BROWNISH-GRAY FINE SAND (LOOSE, MOIST)
	M	98.1%		4	◪	PT	DARK BROWN PEAT (SOFT, MOIST)
						SP-SM	DARK BROWN FINE SAND WITH SILT (LOOSE, MOIST)
5						PT	DARK BROWN PEAT (SOFT, MOIST)
						SP	BROWNISH-GRAY FINE SAND (MEDIUM DENSE, WET)
	M	26.1%		16	◪		
10							
	M	28.7%		41	◪		
15							
	M	29.3%		18	◪		
20							
				19	◪		
25							
	M	25.7%		58	◪		GRADES TO DENSE
30							
				53	◪		
35							
				35	◪		
40							

*BRIDGE DECK ASSUMED AT ELEVATION 100 FEET

Note: See Figure A-2 for Explanation of Symbols

1322-01-6 RMM:HRP:DK:EL 7/13/88

Geo Engineers

LOG OF BORING

FIGURE A-3

BORING NO. J-1
(Continued)

TEST DATA						DESCRIPTION
Lab Tests	Moisture Content	Dry Density	Blow-Count	Samples	Group Symbol	
			73	◪		

DEPTH IN FEET

40

45

50

BORING COMPLETED AT 44 FEET ON 7/5/88

GROUND WATER LEVEL ENCOUNTERED AT 6.5 FEET DURING DRILLING

BORING ABANDONED WITH CEMENT-BENTONITE MIX

Note: See Figure A-2 for Explanation of Symbols

Geo Engineers

LOG OF BORING

FIGURE A-4

1322-01-6 RMM:HRP:DK:EL 7/13/88

BORING NO. W-1

Depth in Feet	Lab Tests	Moisture Content	Dry Density	Blow-Count	Samples	Group Symbol	Description (Surface Elevation: 117.5 feet*)
0						SM	LIGHT BROWN SILTY FINE SAND WITH GRAVEL (LOOSE, MOIST) (FILL)
	M	22.7%		3	◪		
5							
	M	21.9%		6	◪		
10						SM/ML	LIGHT BROWN SILTY FINE SAND AND SANDY SILT (MEDIUM DENSE AND STIFF, MOIST)
	M	29.5%		14	◪		
15						ML	ORANGE-BROWN SANDY SILT (HARD, MOIST) (WEATHERED SILTSTONE)
	M	17.0%		50 FOR 4"	◪		
20						ROCK	BROWNISH-GRAY SILTSTONE
	M	13.1%		50 FOR 4"	◪		
25							BORING COMPLETED AT 22 FEET ON 6/30/88
							NO GROUND WATER ENCOUNTERED DURING DRILLING
							BORING ABANDONED WITH CEMENT-BENTONITE MIX
30							
35							
40							

*DATUM INDICATED ON CONSTRUCTION DRAWING PROVIDED BY PACIFIC COUNTY DATED FEBRUARY, 1930

Note: See Figure A-2 for Explanation of Symbols

Geo Engineers

LOG OF BORING

FIGURE A-5

1322-01-4

BORING NO. W-2

Depth in Feet	Lab Tests	Moisture Content	Dry Density	Blow-Count	Samples	Group Symbol	Description (Surface Elevation: 106.5 feet *)
0						ML	MOTTLED BROWN AND GRAY SANDY SILT WITH OCCASIONAL SAND AND ORGANIC MATTER (SOFT, WET)
	M	51.2%		2	◪		
5						SM/ML	BROWNISH-GRAY SILTY FINE SAND AND SANDY SILT WITH A TRACE OF ORGANIC MATTER (LOOSE AND SOFT, WET)
	M	40.7%		2	◪		
10							
	M	39.3%		3	◪		
15						SM	BROWNISH-GRAY SILTY FINE TO MEDIUM SAND WITH ORGANIC MATTER (LOOSE, WET)
	M	37.4%		5	◪		
20							
	M	54.1%		5	◪		
25							
	M	34.7%		7	◪		
30						SM	GRAY SILTY FINE TO MEDIUM SAND WITH OCCASIONAL ORGANIC MATTER (DENSE TO VERY DENSE, WET)
	M	19.4%		32	◪		
35							
	M	37.5%		50 FOR 4"	◪		
40							BORING COMPLETED AT 38 FEET ON 6/30/88

NO GROUND WATER ENCOUNTERED DURING DRILLING

BORING ABANDONED WITH CEMENT-BENTONITE MIX

*DATUM INDICATED ON CONSTRUCTION DRAWING PROVIDED BY PACIFIC COUNTY DATED FEB. 1930

Note: See Figure A-2 for Explanation of Symbols

Geo Engineers

LOG OF BORING

FIGURE A-6

1322-01-6

BORING NO. B-1

Depth in Feet	Lab Tests	Moisture Content	Dry Density	Blow-Count	Samples	Group Symbol	Description (Surface Elevation: 103 feet *)
0						GM	ASPHALT CONCRETE, 2 INCHES THICK BROWN SILTY FINE TO COARSE GRAVEL WITH SAND (MEDIUM DENSE, MOIST) (FILL)
	M	40.8%		7	◪	ML	DARK BROWN SILT WITH ORGANIC MATTER (MEDIUM STIFF, MOIST)
5							
	M	40.5%		12	◪	ML	LIGHT ORANGE-BROWN SANDY SILT (MEDIUM STIFF, MOIST)
10							
	M	39.2%		6	◪		
15							
						GM	LIGHT BROWN SILTY FINE TO COARSE GRAVEL WITH SAND (DENSE, WET)
	M	12.3%		50 FOR 6"	◪		
20						ROCK	DARK GRAYISH-BROWN SILTSTONE
	M	26.0%		50 FOR 6"	◪		
25							BORING COMPLETED AT 23 FEET ON 7/1/88 GROUND WATER ENCOUNTERED AT 16 FEET DURING DRILLING BORING ABANDONED WITH CEMENT-BENTONITE MIX
30							
35							
40							

*DATUM INDICATED ON CONSTRUCTION DRAWING PROVIDED BY PACIFIC COUNTY DATED SEPTEMBER 1940

Note: See Figure A-2 for Explanation of Symbols

Geo Engineers

LOG OF BORING

FIGURE A-7

1323-016

BORING NO. B-2

TEST DATA						DESCRIPTION
Lab Tests	Moisture Content	Dry Density	Blow-Count	Samples	Group Symbol	Surface Elevation: 79 feet*
M	25.2%		50/5"	■	ROCK	DARK BROWNISH-GRAY SILTSTONE
			50/5"	■		
			50/5"	■		
						BORING COMPLETED AT 2 FEET ON 7/1/88
						RIVER LEVEL AT GROUND SURFACE DURING DRILLING

DEPTH IN FEET: 0, 5, 10, 15, 20, 25, 30, 35, 40

*DATUM INDICATED ON CONSTRUCTION DRAWING PROVIDED BY PACIFIC COUNTY DATED SEPTEMBER 1940

Note: See Figure A-2 for Explanation of Symbols

Geo Engineers

LOG OF BORING

FIGURE A-8

B22-01-6

BORING NO. B-3

Depth (feet)	Lab Tests	Moisture Content	Dry Density	Blow-Count	Samples	Group Symbol	DESCRIPTION (Surface Elevation: 72 feet*)
0	M	47.6%		3	◪	SM	GRAYISH-BROWN SILTY FINE TO MEDIUM SAND WITH GRAVEL AND OCCASIONAL ORGANIC MATTER (LOOSE TO MEDIUM DENSE, WET)
	M	30.2%		16	◪		
	M	32.6%		50/6"	◪	ROCK	DARK GRAY SILTSTONE
							BORING COMPLETED AT 3 FEET ON 7/1/88
							RIVER LEVEL 5 FEET ABOVE MUDLINE DURING DRILLING
5							
10							
15							
20							
25							
30							
35							
40							

DEPTH IN FEET

*DATUM INDICATED ON CONSTRUCTION DRAWING PROVIDED BY PACIFIC COUNTY DATED SEPTEMBER 1940

Note: See Figure A-2 for Explanation of Symbols

Geo Engineers

LOG OF BORING

FIGURE A-9

13CC-01-2

BORING NO. B-4

Depth in Feet	Lab Tests	Moisture Content	Dry Density	Blow-Count	Samples	Group Symbol	Description (Surface Elevation: 91 feet*)
0						SM	BROWN SILTY FINE SAND (LOOSE, MOIST)
	M	26.9%		7	◪		
5							
	M	32.9%		4	◪		
10						ML	BROWNISH-GRAY SANDY SILT (SOFT, WET)
	M	41.7%		3	◪		
15						SM	GRAY SILTY FINE TO MEDIUM SAND WITH GRAVEL AND ORGANIC MATTER (LOOSE, WET)
	M	49.1%		4	◪		
20							
	M	31.1%		55	◪	ROCK	DARK BROWNISH-GRAY SILTSTONE
25				50 FOR 5"	◪		
30							
35							
40							

BORING COMPLETED AT 26 FEET ON 7/1/88

GROUND WATER ENCOUNTERED AT 11 FEET DURING DRILLING

BORING ABANDONED WITH CEMENT-BENTONITE MIX

*DATUM INDICATED ON CONSTRUCTION DRAWING PROVIDED BY PACIFIC COUNTY DATED SEPTEMBER 1940

Note: See Figure A-2 for Explanation of Symbols

Geo Engineers

LOG OF BORING

FIGURE A-10

1322-01-6

BORING NO. C-1

Depth in Feet	Lab Tests	Moisture Content	Dry Density	Blow-Count	Samples	Group Symbol	DESCRIPTION Surface Elevation: 100 feet *
0						GM	BROWN SILTY FINE TO COARSE GRAVEL WITH SAND (LOOSE, MOIST) (FILL)
	M	16.7%		8	◪		
5							
	M	88.1%		5	◪	ML	BROWNISH-GRAY SILT WITH A TRACE OF ORGANIC MATTER (SOFT, WET)
10							
	M	86.0%		2	◪		
15							
				3	◪		
20							
	M	93.1%		1	◪		
25							
				4	◪		
30							
				5	◪		
35						ML	BROWNISH-GRAY SILT WITH OCCASIONAL FINE SAND (STIFF, WET)
	M	37.4%		9	◪		
40							*BRIDGE DECK AT NORTH END OF BRIDGE ASSUMED AT ELEVATION 100 FEET

Note: See Figure A-2 for Explanation of Symbols.

RMM HRP:DK:EL

1322-01-6

Geo Engineers

LOG OF BORING

FIGURE A-11

BORING NO. C-1
(Continued)

DEPTH IN FEET	TEST DATA: Lab Tests	Moisture Content	Dry Density	Blow-Count	Samples	Group Symbol	DESCRIPTION (Surface Elevation:)
40							
				11	◪		
45							
	M	42.7%		8	◪		
50							
							GRADES WITH LENSES OF FINE SAND
				14	◪	ML	GRAY SANDY SILT (HARD, MOIST)
55							
	M	46.6%		38	◪		
60							
				36	◪		
65							BORING COMPLETED AT 64 FEET ON 7/6/88 GROUND WATER LEVEL NOT OBSERVED DURING DRILLING BORING ABANDONED WITH CEMENT-BENTONITE MIX
70							
75							
80							

Note: See Figure A-2 for Explanation of Symbols

1322-01-6 RMM:HRP:DK:EL 7/13/88

Geo Engineers

LOG OF BORING

FIGURE A-12

BORING NO. C-2

Depth in Feet	Lab Tests	Moisture Content	Dry Density	Blow-Count	Samples	Group Symbol	Description (Surface Elevation: 98 feet *)
0						GM	BROWN SILTY FINE TO COARSE GRAVEL WITH SAND (LOOSE, MOIST)
	M	7.1%		10	◪	ML	LIGHT BROWN SANDY SILT (MEDIUM STIFF, MOIST)
5							
	M	41.8%		8	◪		
10							
	M	54.6%		5	◪	ML	GRAY SILT (SOFT, WET)
15							
				9	◪		GRADES TO MEDIUM STIFF
20							
	M	54.7%		10	◪		
25							
				9	◪		
30							
	M	55.2%		7	◪		
35							
				7	◪		
40							

*BRIDGE DECK AT NORTH END OF BRIDGE ASSUMED AT ELEVATION 100 FEET

Note: See Figure A-2 for Explanation of Symbols

Geo Engineers

LOG OF BORING

FIGURE A-13

1322-01-6 RMM:HRP:DK:EL 7/13/88

BORING NO. C-2
(Continued)

DEPTH IN FEET	TEST DATA: Lab Tests	Moisture Content	Dry Density	Blow-Count	Samples	Group Symbol	DESCRIPTION (Surface Elevation:)
40							
	M	46.1%		9	◪		
45							
				7	◪		
50							
	M	55.4%		10	◪		
55							
				10	◪		
60							
	M	58.0%		20	◪	ML	BROWNISH-GRAY SANDY SILT WITH OCCASIONAL ORGANIC MATTER (VERY STIFF TO HARD, WET)
65							
				50 FOR 5"	◪		
70							
	M	64.6%		50 FOR 6"	◪		1 INCH LENS OF HARD PEAT AT 72.5 FEET
75							BORING COMPLETED AT 73 FEET ON 7/7/88 GROUND WATER LEVEL ENCOUNTERED AT 30 FEET DURING DRILLING BORING ABANDONED WITH CEMENT-BENTONITE MIX
80							

Note: See Figure A-2 for Explanation of Symbols

1322-01-6 RMM:HRP:DK:EL 7/13/88

Geo Engineers

LOG OF BORING

FIGURE A-14

BORING NO. C-3

Surface Elevation: 74 feet*

Depth in Feet	Lab Tests	Moisture Content	Dry Density	Blow-Count	Samples	Group Symbol	Description
0						ML	BROWNISH-GRAY SILT (SOFT TO MEDIUM STIFF, WET)
	M	60.2%		5	◪		
5							
				5	◪		
10							
	M	57.2%		6	◪		
15							
				5	◪		
20							
	M	65.5%		7	◪		GRADES WITH OCCASIONAL ORGANIC MATTER
25							
						ML	GREENISH-GRAY SILT (STIFF, WET)
	M	45.4%		16	◪		
						ML	BROWNISH-GRAY SILT (HARD, MOIST)
30							
	M	40.0%		62	◪		
35							AUGER REFUSAL AT 34 FEET BORING COMPLETED AT 34 FEET ON 7/7/88 RIVER LEVEL AT 12 FEET ABOVE MUDLINE DURING DRILLING
40							*BRIDGE DECK AT NORTH END OF BRIDGE ASSUMED AT ELEVATION 100 FEET

Note: See Figure A-2 for Explanation of Symbols*

Geo Engineers

LOG OF BORING

FIGURE A-15

1322-01-6 RMM:HRP:DK:EL 7/13/88

BORING NO. M-1

Depth in Feet	Lab Tests	Moisture Content	Dry Density	Blow-Count	Samples	Group Symbol	Description
							Surface Elevation: 100 feet **
0						GM	BROWNISH-GRAY SILTY FINE TO COARSE GRAVEL WITH SAND (LOOSE, MOIST) (FILL)
	M	7.2%		8	◪		
5							
						SM	LIGHT BROWN SILTY FINE SAND (LOOSE, WET)
	M	68.5%		4	◪	ML	GRAY SANDY SILT (SOFT, WET)
10							
						SM	BROWN SILTY FINE TO COARSE SAND WITH GRAVEL (DENSE, WET)
	M	34.2%		63	◪		
						ROCK	DARK BROWN SILTSTONE
15							
	M	28.8%		50 FOR 5"	◪		
20							
				50 FOR 5"	◪		
25							BORING COMPLETED AT 24 FEET ON 6/29/88
							GROUND WATER ENCOUNTERED AT 11.5 FEET DURING DRILLING
							BORING ABANDONED WITH CEMENT-BENTONITE MIX
30							
35							
40							**BRIDGE DECK ASSUMED AT ELEVATION 100 FEET

TEST DATA

DEPTH IN FEET

Note: See Figure A-2 for Explanation of Symbols

Geo Engineers

LOG OF BORING

FIGURE A-16

BORING NO. M-2

Depth (Feet)	Lab Tests	Moisture Content	Dry Density	Blow-Count	Samples	Group Symbol	DESCRIPTION Surface Elevation: 100 feet*
0						ML	ORANGE-BROWN SANDY SILT WITH OCCASIONAL GRAVEL (MEDIUM STIFF, MOIST) (FILL)
	M	46.7%		10	◪		
5						ML	MOTTLED LIGHT BROWN SILT (HARD, MOIST) (WEATHERED SILTSTONE)
	M	34.0%		54	◪		
10						ROCK	DARK BROWN SILTSTONE
	M	25.4%		50 FOR 5"	◪		
15							BORING COMPLETED AT 14 FEET ON 6/29/88 NO GROUND WATER ENCOUNTERED DURING DRILLING BORING ABANDONED WITH CEMENT-BENTONITE MIX
20							
25							
30							
35							
40							*BRIDGE DECK ASSUMED AT ELEVATION 100 FEET

TEST DATA

DEPTH IN FEET

Note: See Figure A-2 for Explanation of Symbols

Geo Engineers

LOG OF BORING

FIGURE A-17

BORING NO. H-1

TEST DATA						DESCRIPTION
Lab Tests	Moisture Content	Dry Density	Blow-Count	Samples	Group Symbol	Surface Elevation: 106 feet*
					GM	BROWN SILTY FINE TO COARSE GRAVEL WITH SAND (LOOSE TO MEDIUM DENSE, MOIST)

DEPTH IN FEET: 0, 5, 10, 15, 20, 25, 30, 35, 40

REFUSAL ON SILTSTONE BEDROCK AT 6 FEET

BORING COMPLETED AT 6 FEET ON 7/5/88

NO GROUND WATER ENCOUNTERED DURING DRILLING

BORING DRILLED WITH A PORTABLE SOLID FLIGHT AUGER DRILL

BORING ABANDONED WITH CEMENT-BENTONITE MIX

*DATUM INDICATED ON CONSTRUCTION DRAWING PROVIDED BY PACIFIC COUNTY DATED JUNE 1927

Note: See Figure A-2 for Explanation of Symbols

1322-01-6 7/13/88 RMM:HRP:DK:EL

Geo Engineers

LOG OF BORING

FIGURE A-18

BORING NO. H-2

Depth in Feet	Lab Tests	Moisture Content	Dry Density	Blow-Count	Samples	Group Symbol	DESCRIPTION Surface Elevation: 92.5 feet*
0						GM	BROWN SILTY FINE TO COARSE GRAVEL WITH SAND (LOOSE TO MEDIUM DENSE, MOIST)
5	M	21.6%		14	◪		
						GM	BROWN FINE TO COARSE GRAVEL WITH SAND (LOOSE, WET)
	M	11.5%		50 FOR 4"	◪		
10				50 FOR 5"	◪	ROCK	BROWNISH-GRAY SILTSTONE
							BORING COMPLETED AT 11 FEET ON 7/8/88
							GROUND WATER ENCOUNTERED AT 6 FEET DURING DRILLING
							BORING ABANDONED WITH CEMENT-BENTONITE MIX
15							
20							
25							
30							
35							
40							

*DATUM INDICATED ON CONSTRUCTION DRAWING PROVIDED BY PACIFIC COUNTY DATED JUNE 1927

Note: See Figure A-2 for Explanation of Symbols

1322-01-6 RMM:HRP:DK:EL 7/13/88

Geo Engineers

LOG OF BORING

FIGURE A-19

BORING NO. H-3

Depth in Feet	Lab Tests	Moisture Content	Dry Density	Blow-Count	Samples	Group Symbol	Description
							Surface Elevation: 106 feet*
0						GM	BROWN SILTY FINE TO COARSE GRAVEL WITH SAND (LOOSE TO MEDIUM DENSE, MOIST) (FILL)
	M	9.6%		12	◪		
5							
				13	◪	SM	BROWN SILTY FINE SAND WITH GRAVEL (LOOSE TO MEDIUM DENSE, MOIST)
10							
						SP-SM	BROWN FINE SAND WITH SILT (LOOSE, MOIST)
	M	32.2%		6	◪		
15							
	M	18.2%		7	◪	SP	BROWN FINE TO MEDIUM SAND WITH GRAVEL (LOOSE, MOIST)
20							
	M	20.5%		50 FOR 4"	◪	ROCK	MOTTLED BROWN AND GRAY SILTSTONE
25	M	15.9%		50 FOR 3"	◪		AUGER REFUSAL AT 25 FEET BORING COMPLETED AT 25 FEET ON 7/8/88 GROUND WATER ENCOUNTERED AT 23 FEET DURING DRILLING BORING ABANDONED WITH CEMENT-BENTONITE MIX
30							
35							
40							*DATUM INDICATED ON CONSTRUCTION DRAWING PROVIDED BY PACIFIC COUNTY DATED JUNE 1927

Note: See Figure A-2 for Explanation of Symbols

Geo Engineers

LOG OF BORING

FIGURE A-20

1322-01-6 7/13/88 RMM:HRP:DK:EL

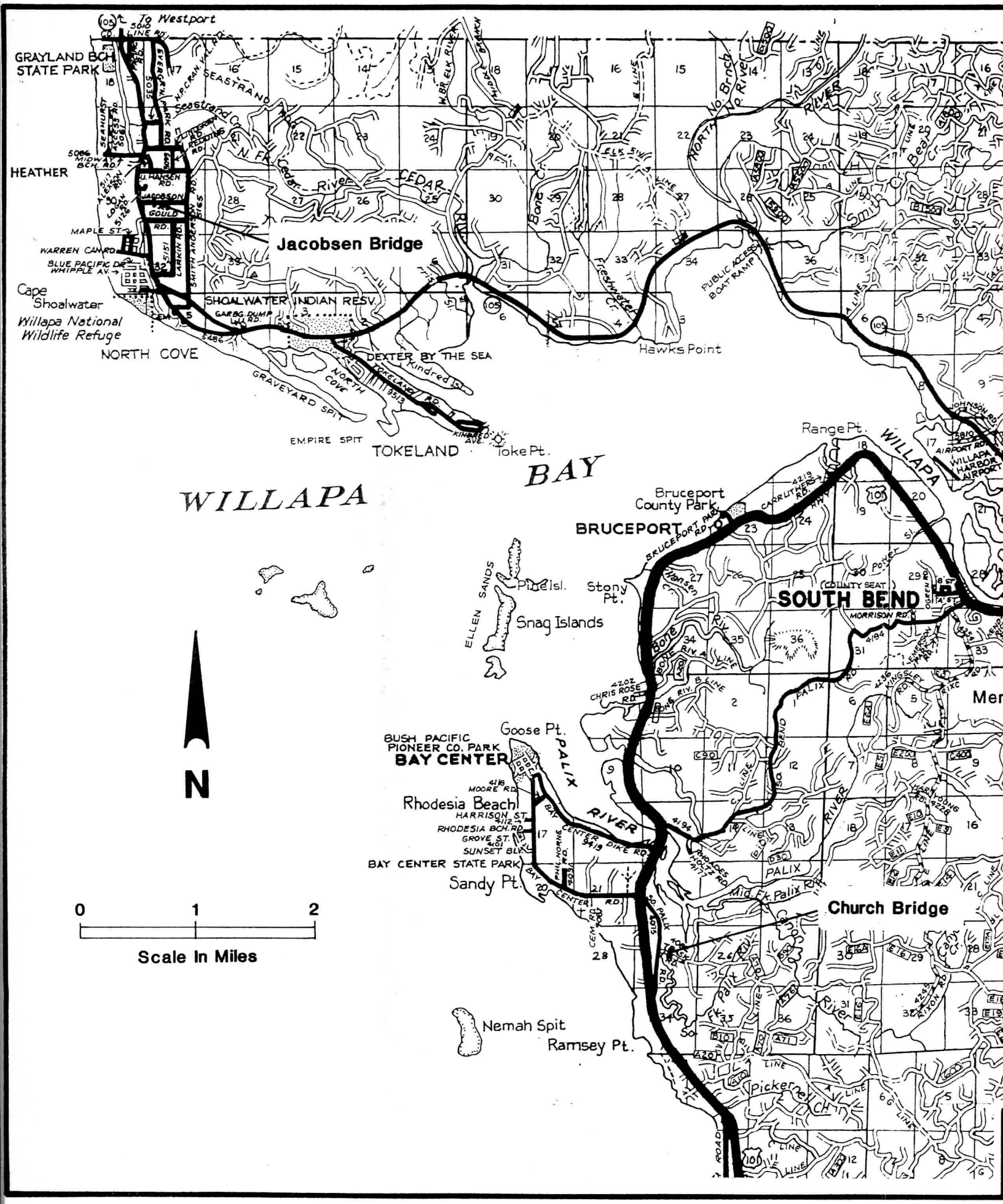
To Westport
GRAYLAND BCH STATE PARK
HEATHER
Jacobsen Bridge
Cape Shoalwater
Willapa National Wildlife Refuge
NORTH COVE
SHOALWATER INDIAN RESV.
DEXTER BY THE SEA
Kindred Isl.
GRAVEYARD SPIT
EMPIRE SPIT
TOKELAND
Toke Pt.
Hawks Point
PUBLIC ACCESS BOAT RAMP
WILLAPA BAY
Range Pt.
Bruceport County Park
BRUCEPORT
Stony Pt.
Pine Isl.
Snag Islands
ELLEN SANDS
SOUTH BEND
(COUNTY SEAT)
Goose Pt.
BUSH PACIFIC PIONEER CO. PARK
BAY CENTER
Rhodesia Beach
BAY CENTER STATE PARK
Sandy Pt.
PALIX RIVER
Church Bridge
Nemah Spit
Ramsey Pt.
N
0 1 2
Scale In Miles

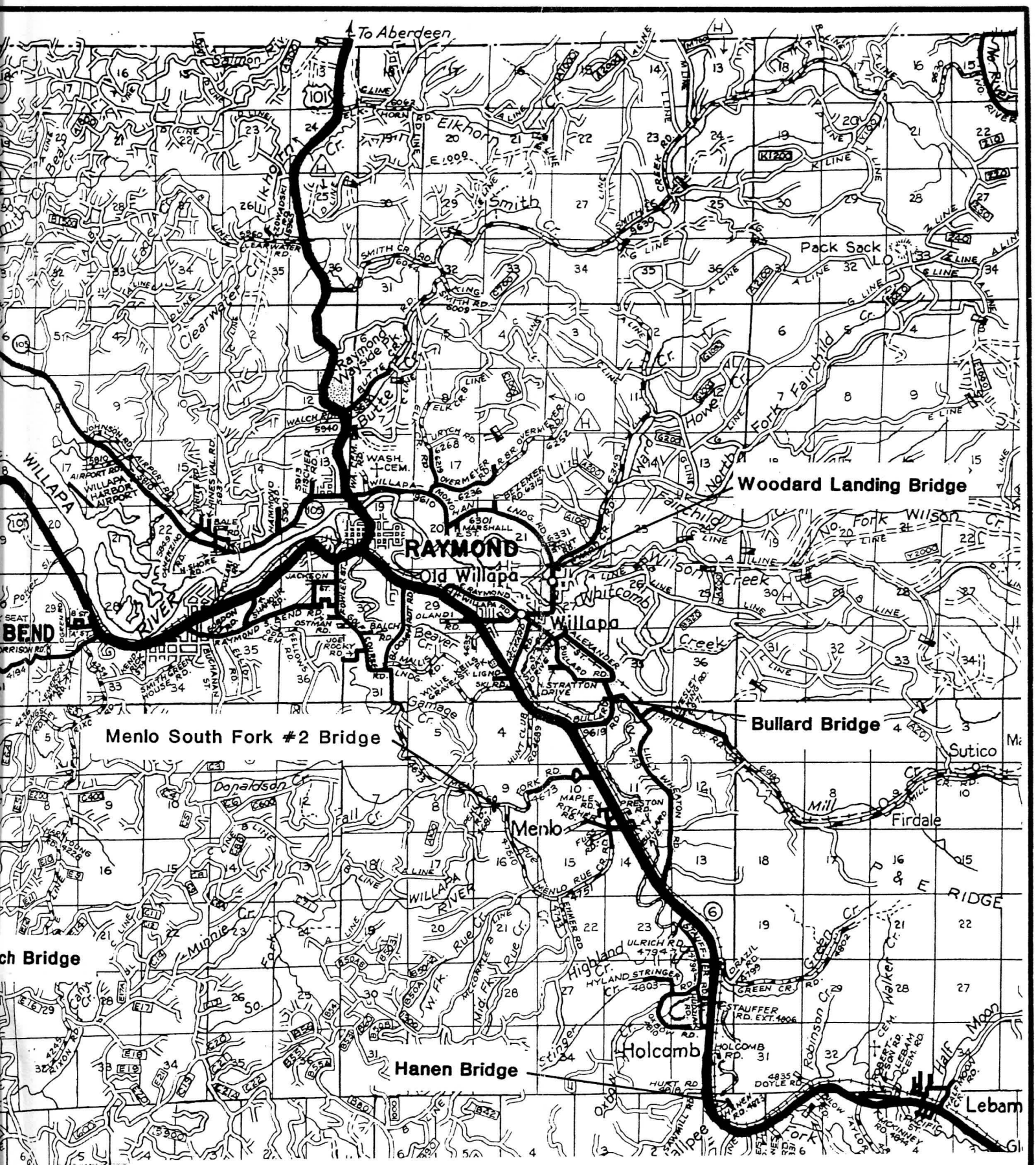

Geo Engineers

VICINITY MAP

FIGURE 1