DRAFT
REPORT TO

PACIFIC COUNTY DEPARTMENT OF PUBLIC WORKS

RESULTS OF GEOTECHNICAL INVESTIGATION
PROPOSED REPLACEMENT OF SOULE BRIDGE
PACIFIC COUNTY WASHINGTON
PROJECT NO. BROS-2025(027)

DRAFT

Prepared by:

Golder Associates Inc.
Redmond, WA

David P. Findley
Associate

Robert L. Plum, P.E.
Associate

December 30, 1992

923-1165

TABLE OF CONTENTS

Page No.

1. INTRODUCTION 1

2. PROJECT AND SITE DESCRIPTION 1

3. SUBSURFACE INVESTIGATION AND LABORATORY TESTING 2

3.1 Borings 2
3.2 Laboratory Testing 3

4. SITE GEOLOGY 3

5. SUBSURFACE CONDITIONS 4

6. CONCLUSIONS AND RECOMMENDATIONS 6

6.1 Foundation Recommendations 6
6.1.1 General 6
6.1.2 Vertical Pile Capacity 6
6.1.3 Lateral Pile Capacity 7
6.2 Abutment Recommendations 8
6.3 Approach Slab 8
6.4 Erosion and Scour Protection 8
6.5 Liquefaction Considerations 9
6.6 Construction Considerations 10
6.6.1 General 10
6.6.2 Pile Installation 10
6.6.3 Earthwork 11

7. USE OF THE REPORT 11

8. REFERENCES 12

LIST OF FIGURES

1. Site Location Map
2. Soule Bridge
3. SPT Data
3A. Pile Deflection Soule NW Abutment
3B Pile Deflection Soule NW Abutment
4. Deflection of Lateral Loaded Pile
Moment Profile of Lateral Loaded Pile
5. Deflection of Lateral Loaded Pile
Moment Profile of Lateral Loaded Pile

DRAFT

LIST OF FIGURES (Cont.)

6A. Pile Deflection Soule SE Abutment
6B. Pile Deflection Soule SE Abutment
7. Deflection Curve Laterally Loaded Pile

LIST OF APPENDICES

Appendix A. Borehole Logs
Appendix B. Laboratory Test Results

DRAFT

1. INTRODUCTION

This report presents the results of our geotechnical investigation for the proposed replacement of the Soule Bridge in Pacific County, Washington. This work was performed under our Consultant Agreement BROS-2025(027) authorized by the County on August 18, 1992, and the Supplemental Agreement for additional work, dated November 20, 1992. This letter revised our scope of work (two additional exploratory borings) as a result of the bridge design changing from a single-span structure to a three-span structure.

The purpose of our study was to characterize the subsurface conditions and develop geotechnical design and construction recommendations for the reconstruction of the Soule Bridge. The work consisted of reviewing available information, a preliminary site reconnaissance, drilling four borings, laboratory testing, engineering analysis, and preparation of this design report.

2. PROJECT AND SITE DESCRIPTION

The proposed bridge will replace the existing narrow two lane bridge which crosses Smith Creek in Pacific County as shown on Figures 1 and 2. The bridge is located on Smith Creek Road, approximately 1.5 miles east of the intersection of Smith Creek Road and Highway 101 which is located five miles north of Raymond, Washington.

The proposed bridge will be constructed in approximately the same location as the existing bridge. Bridge construction will consist of a two-lane, reinforced concrete structure between Stations 80+06.00 and 81+41.00 for a distance of 135 feet. The structure will have three spans which from southeast to northwest equal 43 feet, 49 feet, and 43 feet as measured at the centerline of the bridge deck. The bridge will be supported on two abutment piers and two interior piers, each constructed at a skew of 49 degrees northeast-southwest to the centerline of the bridge deck, as shown on Figure 2. Based upon the topographic map and preliminary bridge plan provided by Sargent Engineers Inc., the new bridge deck will be level at elevation 165.00. The current main channel of Smith Creek trends at a skew of approximately 49 degrees to the centerline alignment of the new bridge deck and is essentially centered between the two interior piers. The design plans indicate normal high water is elevation 144.60 and extreme high water is elevation 160.13. The deepest portion of the channel is at about elevation 141. This would place the bridge deck approximately 25 feet above the streambed at its greatest height.

Both the northeast and southwest approaches will be constructed with fill sections approximately 1.5 to 2.0 feet in thickness and concrete wing walls. We understand that the interior piers will have vertical pier dead loads of 545 kips with vertical live loads of 173 kips. The abutment piers will have vertical pier dead loads of 155 kips with vertical live loads of 114 kips. The lateral longitudinal earthquake loads will be resisted at the abutments with a design load of 160 kips per abutment. The ultimate transverse design earthquake loads will be 12 kips for abutment piers and 73 kips for interior piers with a 1,961 kip-foot moment.

DRAFT

The existing bridge across Smith Creek is a 108-foot long, two-lane, five span timber bridge. The bridge supports the roadway approximately 21 feet above the bottom of Soule Creek. Smith Creek has reportedly flowed near the top of the bridge during past flood events. The bridge deck is supported on four interior piers consisting of timber piles interconnected with timber lagging boards. We understand information relative to the construction and bearing depth of the existing bridge piers is not available. Based on visual observations, the piers appear to have performed adequately with no apparent evidence of adverse settlement.

Based on discussions with both the County and Sargent Engineers, we understand that on a previous project in similar ground conditions the County had problems using a driven mandrill shell pile (e.g. Raymond pile, others). Apparently the problem involved some difficult driving that partially collapsed the casing of one or more of the piles.

3. SUBSURFACE INVESTIGATION AND LABORATORY TESTING

A reconnaissance field trip was made by representatives of Golder Associates Inc. on July 3, 1992, prior to the initiation of the field investigation. The purpose of the field trip was to collect preliminary information on the existing geology to determine the best method of subsurface investigation. Two drill hole locations at the proposed replacement bridge abutments were determined during the field trip.

Initial plans for the replacement of Soule Bridge called for a single span, pre-stressed concrete, two-lane structure. Current plans are to replace the existing bridge with a triple-span, two-lane, pre-stressed concrete bridge. Boreholes SO-C1 and SO-C2 were added to the scope of work to investigate soil conditions at the proposed interior pier locations of the triple-span bridge.

3.1 Borings

The borehole locations correspond to the location of the proposed foundations and were located based on taped measurements from the centerline and abutment locations of the proposed bridge provided by Pacific County. The boring locations are shown on Figure 2. All drilling was performed by Holt Drilling Co. of Puyallap, WA, with a truck mounted Mobile B-61 drill rig. Five foot lengths of four-inch inner diameter, hollow-stem auger were used to advance the borings. Access holes were cut in the bridge deck for boreholes SO-C1 and SO-C2. The holes were cut between longitudinal beams with a chain saw. Subsequent to drilling, the holes in the bridge deck were covered with 3-foot square by 1/2 inch thick steel plates which were bolted to the bridge deck with 8-inch lag bolts. The edges of the steel plates were covered with asphalt repair material which was heated with a propane torch prior to compaction.

At each boring location, Standard Penetration Test (SPT) sampling was performed using a two-inch O.D. split-spoon sampler and a standard 140 pound hammer in accordance with ASTM D-1586. During the test, a sample is obtained by dropping the hammer a distance of

DRAFT

30-inches in free-fall to drive the sampler a distance of 18-inches into the soil. The number of blows required for each 6-inches of penetration is recorded. The Standard Penetration Resistance ("N-value") of the soil is calculated as the number of blows required for the final 12-inches of penetration. If a total of 50 blows is recorded within a single 6-inch interval, the test is terminated and the blow count is recorded as 50 blows for the number of inches of penetration. This resistance, or N-value, provides a measure of the relative density of granular soils and the relative consistency of cohesive soils. Figure 3 is a plot of SPT data ("N- values") from the borings.

The borings were drilled under the full-time observation of a staff engineer from our firm. Soil samples obtained from the split-spoon sampler were classified in the field and representative portions were placed in air-tight containers. The soil samples were classified and described in accordance with the Unified Soil Classification System as summarized in Appendix A. The soil samples were returned to our Redmond, Washington, laboratory for further examination and testing.

Summary borehole logs are presented in Appendix A. The elevations included on the logs were estimated from the topographic survey map and should be considered approximate. The stratigraphic contacts shown on the individual borehole logs represent the approximate boundaries between soil and rock types. The actual transitions may be more gradual or abrupt. The subsurface and groundwater conditions depicted are for the dates and locations only, and therefore, are not necessarily representative of other locations and times.

3.2 Laboratory Testing

Laboratory testing was performed on selected representative samples obtained from the borings. Testing included classification testing consisting of sieve analyses, natural water contents, Atterberg limits, and unit weights. Strength testing was conducted on the clay and consisted of one unconfined compression test. All tests were performed in accordance with ASTM Standards.

The test results are included in Appendix B and/or on the boring logs.

4. SITE GEOLOGY

Smith creek flows through a broad valley which has a relatively flat bottom infilled by the Smith Creek floodplain. The stratigraphic soil units encountered during our investigation of the Smith Creek Bridge consist of fine grained materials typical of a relatively low energy depositional environment.

A dark gray claystone mapped as the lower to middle Miocene age Astoria (?) Fromation by Wagner (1967) was encountered in the borings and appears to have been deposited in a marine environment as indicated by the presence of small clam shells. The unit is massive to very faintly laminated, typical of a low energy, deep water depositional environment.

DRAFT

The claystone is overlain by an olive gray, horizontally stratified, alluvium which typically contains wood fragments and appears to have been deposited in the formerly deeper valley. The lower energy, moderate brown, fine sands and silts were deposited by Smith Creek as the creek meandered back and forth across the valley depositing its bedload sediments in the relatively quiet overbank areas of the stream levees and floodplain. The alluvium is overlain by a moderate brown, flood plain deposit which directly underlies fill placed for the existing roadway and bridge approaches.

5. SUBSURFACE CONDITIONS

The results of our borings indicate the interior piers are underlain by very loose to compact alluvial silt and sand overlying soft weathered claystone (Astoria (?) Formation), as shown in the cross-section on Figure 2. The subsurface conditions at the abutment piers include a compact to dense granular fill overlying a very loose to loose flood plain silt deposit which is further underlain by the loose to very loose alluvial silt and sand. Underlying these units is the soft claystone.

Specific conditions at each pier include:

Pier	Approx. Ground Elev.	Depths in Feet Below Ground Surface				Approx. Elev. to Hard Clay/Soft Claystone
		Fill	Flood Plain Deposit	Alluvium	Clay	
Northwest Abutment (SO-E)	163	0-5.5	5.5-18.5	18.5-26.0	26.0->38.9	137
Southeast Abutment (SO-W)	163	0-2.5	2.5-7.0	7.0-27.0	27.0->38.8	138
Northwest Interior Pier (SO-C2)	148	N/A	N/A	0-4.5	4.5->16.4	138
Southeast Interior (SO-C1) Pier	143	N/A	N/A	0-8.9	8.9->17.4	138

DRAFT

Generally the soil units encountered in our borings consisted of the following:

- FILL - Fill was encountered in borings SO-E and SO-W drilled at the two existing bridge abutments. The fill appears to comprise road base material and in general consists of compact to dense, nonstratified, sand and subangular to subrounded gravel with a little silt and cobbles. The fill was encountered directly below the roadway pavement and extended to depths of 2.5 and 5.5 feet. SPT samples obtained in the fill indicated an "N-value" range of 10 to 31.

- FLOOD PLAIN DEPOSIT - A flood plain deposit (overbank unit) was encountered in borings SO-E and SO-W drilled at the abutments. This unit was encountered directly below the fill and extended to depths of 18.5 feet in boring SO-E and 7 feet in boring SO-W. It consisted of very loose to loose silt with a trace of fine sand, clay, and fine gravel. SPT samples obtained in the flood plain deposit indicated an "N-value" range of 3 to 8.

- ALLUVIUM - Alluvium was encountered in all of the borings. At the two abutments, the alluvium was encountered directly below the flood plain deposit and extended to a depth of 26 to 27 feet. At the two interior piers, the alluvium was encountered at the existing ground surface and extended to a depth of 25.5 to 27 feet. In general, the alluvium consisted of very loose to compact, nonstratified to faintly laminated, silt and fine sand with occasional interbeds containing a trace of wood fragments. Within the active stream channel, the bed load was comprised of recent alluvium consisting of coarse sand, gravel, and cobbles. SPT samples obtained in the alluvium indicated an "N-value" range of 1 to 15 and averaged 3 to 4. The higher blow counts (15 and 11) were noted at a depth of 20 to 23 feet in boring SO-C1 drilled at the northwest interior pier. The results of grain size analysis tests on the alluvium are included in Appendix C.

- CLAYSTONE - A claystone (Astoria (?) Formation) was encountered in each of the borings and extended to the full depth of exploration. At the northwest abutment, the clay was encountered at a depth of 26 feet (elevation 137). At the southeast abutment it was encountered at a depth of 27 feet (elevation 138). At the two interior piers it was encountered at depths of about 5 to 9 feet below ground surface (about elevation 138) or about 25 feet below the existing bridge deck. For engineering purposes, the material is considered a hard to very hard clay to a weak rock. In general, the claystone was massive to faintly laminated, clay with varying amounts of silt, fine sand, and shell fragments. Based on the Atterberg limit result, the material has a Plastic Index of about 52 percent with a natural moisture content at about the plastic limit.

  Based on the "N" values, the clay consistency was hard to very hard ranging from 50 to 100 blows/ft in the upper 4 to 8 feet of the unit. Below these depths, the "N" values increased to over 100 indicating a very hard clay to a very weak rock. With depth, the unit probably increases in strength to a moderately weak rock. The unconfined compression test on the split spoon sample indicated an undrained strength of about 16,800 psf (cohesion of 8,400 psf) for a sample that

DRAFT

had an "N" value of 100 blows/ft. Due to sample disturbance, this is probably a low value with the actual in-situ strength being greater.

The groundwater appears to be perched above the claystone and was encountered at depths of approximately 16 to 18 feet at the abutment borings during drilling or about elevation 147. This elevation is about 4 feet above the level of the stream and implies that some of the loose alluvium is saturated.

6. CONCLUSIONS AND RECOMMENDATIONS

6.1 Foundation Recommendations

6.1.1 General

Foundation loads should be supported in the underlying hard clay/weak claystone as the overlying alluvium and flood plain deposits are loose and are not considered acceptable as load bearing soils. Numerous deep foundation types supported in the clay/claystone are technically feasible including driven piles and drilled piles/piers.

Based on discussions with Sargent Engineers, we understand that the preferred foundation type at this site are driven steel H-piles, in particular 55 ton HP-53 sections (nominal 12 inch pile). Based on the subsurface conditions and type of structure, we concur with the use of this pile type. The preliminary design includes four piles at a 6 foot spacing for the abutment piers and seven piles at a spacing of 4 foot 10 inches for the interior piers.

6.1.2 Vertical Pile Capacity

In our opinion, driven H-piles will develop a 55 ton capacity through end bearing if weak/moderately strong rock is encountered, friction, and/or a combination of both. For short term transient loads the allowable pile loads can be increased by 1/3. Based on the borings, we estimate that the piles will drive to the required driving resistance at the following depths below existing ground surface and elevations:

PIER	DEPTH TO BEARING	ESTIMATED INTO CLAY	DEPTH EST. TIP ELEV.
NW ABUTMENT	26 ft	5 ft	132
NW INTERIOR	4.5 ft	6 ft	132
SE INTERIOR	8.9 ft	6 ft	133
SE ABUTMENT	27 ft	8 ft	130

DRAFT

These depths are for estimating purposes only, the actual minimum pile depth to develop the required vertical load should be determined during construction based on the actual pile driving resistances as discussed below in Section 6.4. We recommend that all piles be driven a minimum of 4 feet into the hard clay/claystone bearing stratum and/or at least 10 feet below grade, whichever is greater.

6.1.3 Lateral Pile Capacity

We understand that the piles will only be required to resist transverse lateral loads since the longitudinal loads will be transferred across the deck and resisted by passive pressures in the abutments. Based on design information from Sargent, the piles will be designed for an ultimate lateral capacity of about 5.2 tons/pile applied at the bridge deck. The piles were assumed to be "fixed" and oriented such that the largest section modulus is in the transverse direction. Due to the applied loads occurring at the bridge deck, an overturning moment of 1,916 k-ft develops at the base of the interior piers. Since the horizontal load and resulting moment are only applied in the transverse direction, the wide pier wall (30 feet wide with a projected width perpendicular to the bridge of about 24 feet) will act as a wide footing. Thus it will resist the applied moment by developing additional vertical load on one side of the "pile cap" and reduced load on the others.

Although the changes in vertical pile loads will resist the overturning moments, the actual horizontal load must be transferred as lateral loads on the piles. We used the computer program COM624 to evaluate the pile behavior at each pier location. Figures 3 through 6 are the results of these analyses including both the deformation and the moment in the piles as a function of depth for the design lateral load of 5.2 kips. Figure 7 shows how the maximum computed displacement varies with load. In the analysis, we assumed loose granular soil from the ground surface to the top of the bearing clay/claystone. We assumed pile penetration as estimated above. Due to the pile spacing, we reduced the effective soil modulus coefficient (k values) shown below by multiplying k by 0.4 for the interior piles and by 0.7 for the abutment piles. The soil parameters for the loose granular layer included:

- Unit Weight 120 pcf
- KSOIL Type: Assume 4 (Reese criteria for sand)
- ϕ'=28 degrees
- k=40 pci

For the clay/claystone the following was used:

- Unit Weight 120 pcf
- KSOIL Type: Assume 2 (Reese criteria for stiff clays below the water table)
- c'=10,000 psf
- ϵ_{50}=0.5 percent (strain at 50% failure)
- k=6,000 pci

The results presented on Figures 3 and 4 can be used directly, to estimate an equivalent linear spring constant, or to estimate an apparent "point of fixity".

6.2 Abutment Recommendations

We understand that the new bridge abutments will consist of about five feet of fill with abutment and wing walls. These walls can be either cast-in-place cantilever walls or MSE (Mechanically Stabilized Earth) fill walls such as Reinforced Earth or VSL.

In designing the cantilever walls, the following design assumptions can be used:

- ACTIVE PRESSURE: The active pressure should be based on a fluid with a density of 30 pcf (triangular distribution) plus a surcharge load of 250 psf.

- PASSIVE PRESSURE: The allowable passive pressure should be based on a fluid with a density of 250 pcf (triangular distribution) in a direction into the slope. For loads acting outward (i.e. toward the slope), the allowable passive pressure should be ignored.

- FOOTING: The allowable bearing pressure for the wall footing bearing on compacted fill is 3,000 psf with a minimum of 24 inches embedment below the lowest adjacent ground level. This allowable bearing assumes that the subgrade preparation recommendations in Section 6.3 are properly implemented. The location of the footing (both vertically and horizontally) should be such that an imaginary line drawn from the outer edge of the footing downward at 2H:1V does not intercept the adjacent slope surface. A base friction value of 0.35 can be used.

If an MSE fill is used, the fill should be composed of well graded granular fill with less than 10 percent passing the No. 200 sieve, placed in eight inch loose lifts and compacted to at least 95 percent of dry density based on ASTM D1557 (Modified Proctor). In designing the wall, the soil can be assumed to have a unit weight of 125 pcf and a friction angle of 32 degrees.

6.3 Approach Slab

The tendency for future cracking and differential settlement occurring between the pile supported bridge deck and the approach fill can be mitigated by constructing approach slabs. The decision to use an approach slab should be based on the estimated differential settlements, costs, and Pacific County experience at other bridges. We estimate that the differential settlement between the abutment and the piles will be about 1/2 to one inch.

6.4 Erosion and Scour Protection

The soils composing the slopes are considered susceptible to erosion due to their gradation. Thus we recommend that the slopes below the abutment and wing walls are covered with riprap to at least the anticipated high flood levels. Information on peak flood velocities

DRAFT

was not available. However, we anticipate that WSDOT's specification for Light Loose Riprap will be suitable.

We understand that Sargent typically places the interior pile caps (pier wall in this case) four feet below ground surface for erosion protection. Since information on peak flood velocities was not available, we can not confirm this design. However, based on the soil types and the stream size this seems appropriate. The required minimum pile depths presented in section 6.1 should provide adequate protection against scour of the piles.

6.5 Liquefaction Considerations

Based on the WSDOT Seismic Zonation map, the site has a design peak acceleration coefficient of 0.1g. Generally the peak ground acceleration used in a liquefaction analysis is assumed to be larger than the design seismic coefficient. Although we understand this map is current criteria, the map was published in 1988 and probably does not consider the potential for the large Plate Boundary subduction zone earthquakes currently being postulated.

The alluvium and flood plain deposits overlying the clay/claystone are loose and present a liquefaction concern. During normal water levels in the river, much of these deposits are above the water table and not subjected to liquefaction, although they may settle during a major seismic event. There is about six to ten feet of alluvium below the groundwater table at the pier locations. Based on the borings, this material is a very loose to compact silty sand to sandy silt with uncorrected SPT "N" values ranging from 1 to 15 blows/ft.

We completed a liquefaction analysis which consisted of determining the corrected N1 value and the required Nr to resist liquefaction using Seed's methods. The N values were corrected for both overburden stress and silt content to obtain N1. The N values were increased by 5 b/ft for the silty sand soils and 7 b/ft for the sandy silt soils (Seed, 1986, "Design Problems in Soil Liquefaction", NSF/ENG 86011). We completed the analysis for a design peak acceleration (Am) of both 0.1g and 0.15g. Assuming a normal high river level of about elevation 145, three out of eleven of the N1 values indicated liquefaction for Am=0.15g while none of the N1 values indicated liquefaction.

Based on these results of the liquefaction analyses, we conclude that the site has a low risk of experiencing a complete liquefaction failure. However, even localized liquefaction could result in significant displacements of the abutment slopes/walls, overstress the bridge deck in compression and/or apply additional lateral loads to the piles.

Accordingly, we recommend the following alternatives:

1. ACCEPT RISKS: There is a relatively small risk that the design earthquake will occur and an even smaller risk that significant liquefaction damage would occur. Thus, the risks could be accepted and the problem not mitigated.

DRAFT

2. SOIL IMPROVEMENT: The abutment areas could be excavated to within about a foot of the river level and thoroughly compacted with a heavy vibrating drum roller to increase the relative density of the soils. This method will obtain significant improvement to a depth of 2 to 4 feet below the compaction level and some minor improvement a few feet below. Other more effective but costly methods include vibro-floatation, dynamic compaction (dropping a heavy weight), and other techniques.

3. DESIGN FOR LARGER LOADS: The bridge and the piles could be designed to resist additional lateral loads due to liquefaction. The estimation of these loads is very uncertain but could be significant in the longitudinal direction.

Details of these methods is beyond the scope of this report and may be unnecessary if option (1) is selected.

6.6 Construction Considerations

6.6.1 General

Construction for the new bridge should involve removal of the existing bridge, installation of the driven H-pile, subgrade preparation for the new fill abutments and walls, construction of the walls, placement of the approach fills and placement of slope protection. In our opinion, it would be desirable for a qualified geotechnical engineer to observe critical geotechnical aspects of the construction including pile installation, abutment subgrade preparation, footing preparation, and fill placement. Alternatively, Pacific County Department of Public Works could observe these procedures and communicate the information and/or any problems to a geotechnical engineer.

6.6.2 Pile Installation

Specific H-pile driving criteria can be established only after the actual pile type and driving equipment are selected and tested in the field. Therefore, only general guidelines for equipment selection and driving criteria are discussed. We recommend that the piles be driven continuously by using an air, steam or diesel pile driving hammer. Preferably, the driving energy should be at least one foot-pound for each pound of pile weight and the weight of the hammer should be at least one-half the total weight of the pile. It is anticipated that a hammer with manufacturer's rated minimum energy of about 20,000 foot-pounds per blow will be required to install the piles on this project.

A number of aspects concerning pile driving equipment performance, as well as soil behavior and variability of soil conditions during driving should be observed to assure that the intended results are being achieved. These include the hammer performance (length of stroke, blows per minute, steam/air pressure, etc.), continuous pile driving record (blows per foot and blows per inch during the final 12 inches), pile length, tip elevation, cut-off elevation, and other appropriate data. Prior to driving but after the pile and hammer are selected, we recommend performing a dynamic analysis to establish the set criteria.

DRAFT

Although driving formulas can be used, we recommend completing a wave equation analysis to determine the driving criteria. The piles should be driven to an ultimate capacity equal to twice the allowable design loads. The results of the dynamic analysis can also be used to judge how hard the piles can be driven without damage in order to obtain the required penetration depths.

Although we believe that the piles can be driven to the depths indicated in Section 6.1.2, difficult driving may be encountered that prevents the piles from penetrating the required 4 feet into the claystone or 10 feet below ground surface (whichever is greater). The success can be improved by welding a pointed steel plate on the end such as a Pruyn Point. We recommend that the contractor be required to provide suitable points at the owners request.

6.6.3 Earthwork

Prior to placing the wall footings or any approach fill, the contractor should excavate any existing topsoil or pavement. On sideslopes exceeding 5H:1V, benches should be excavated into the existing slopes as specified in WSDOT Standard Specification for hillside terracing. The subgrade should then be proof-rolled with a loaded dump truck and then thoroughly compacted to form a firm, stable base. Areas that are soft or unstable should be over-excavated and backfilled with structural fill to form a firm, stable base. Use of a geotextile may be warranted if the subgrade is particularly soft.

Structural fill should be placed in maximum 8-inch loose lifts, moisture conditioned to near optimum moisture content, and compacted to at least 95 percent of maximum dry density as determined by ASTM D 1557. We recommend a large steel-drum vibratory roller or other dynamic equipment be used to compact fill. If density tests indicate adequate compaction is not being achieved, the fill should be scarified, moisture conditioned to near optimum moisture content, recompacted, and retested.

It may be necessary to excavate below the groundwater table to construct the interior pile caps (wall pier). Due to the proximity of Smith Creek and the presence of alluvium, sheet piles penetrating into the underlying clay may be required to effectively dewater any excavations. To minimize these problems, summer construction is recommended as the creek should be at its lowest stage.

7. USE OF THE REPORT

This report has been prepared exclusively for the use of the Pacific County and their consultants for specific application to this project. This report pertains only to the specific conceptual designs described in the report. The field investigation was performed in general accordance with locally accepted geotechnical engineering practice to provide information for the area explored. There are possible variations in the geologic conditions over the site and in the hydrologic conditions with time (especially during the rainy season). We recommend that a contingency for unanticipated conditions be included in the construction schedule and budget.

We are available to answer any questions you may have concerning this report or to further discuss our geotechnical recommendations with you. If you have any questions or need additional information, please contact us.

8. REFERENCES

Wagner, Holly C. (1967) Preliminary Geologic Map of the Raymond Quadrangle Pacific County, Washington; U.S. Geological Survey Open File Report.

DRAFT

FIGURES

DRAFT

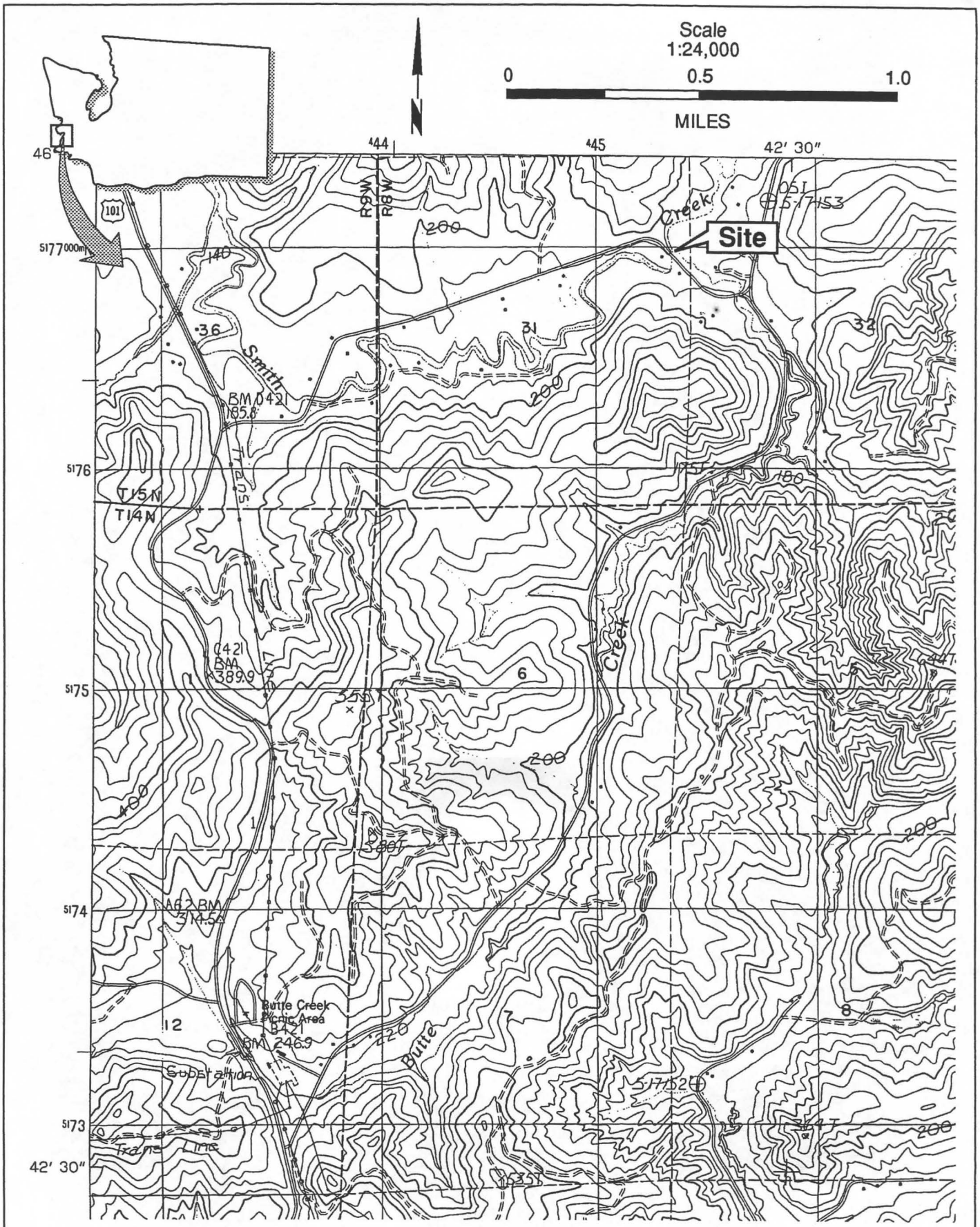

FIGURE 1
SITE LOCATION MAP
PACIFIC CO/SOULE BRIDGE/WA

SOURCE: USGS Raymond Quad, 1986.

PROJECT NO. 923 1165 DRAWING NO. 44344 DATE 12/16/92 DRAWN BY EA

Golder Associates

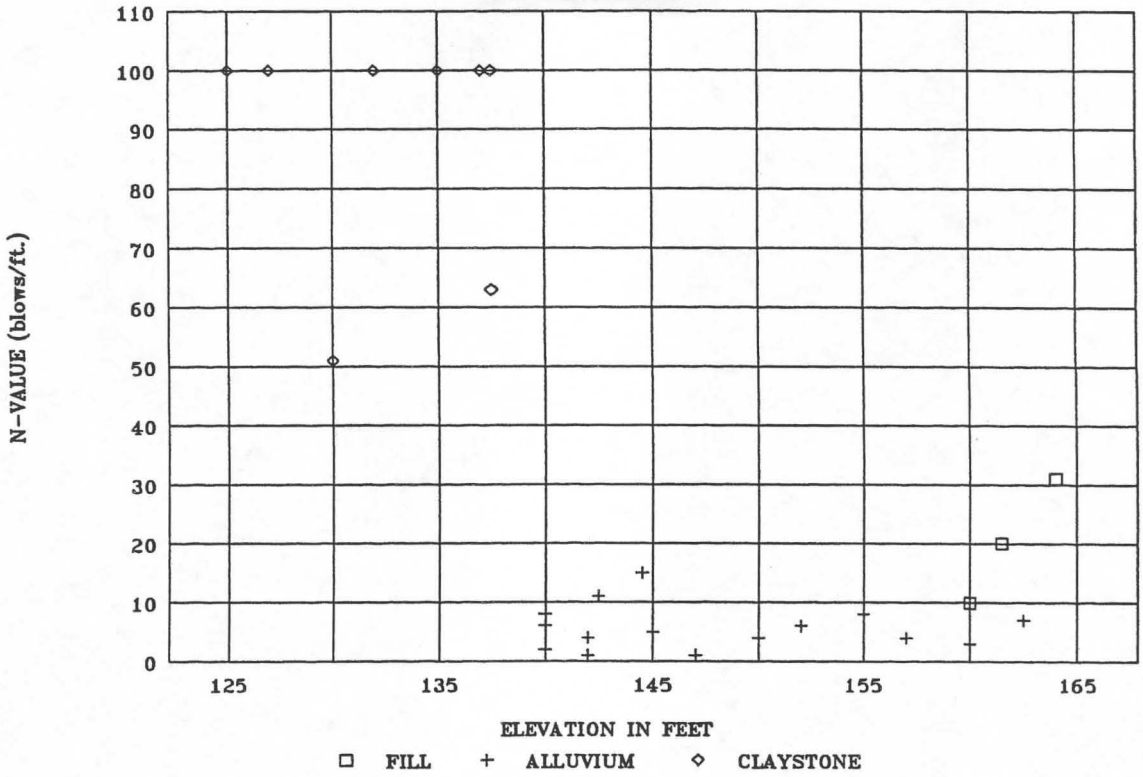

FIGURE **3**

SPT DATA

PACIFIC COUNTY/SOULE BRIDGE/WA

PROJECT NO. 923-1165 DRAWING NO. 44356 DATE 12/14/92 DRAWN BY TB

Golder Associates

FIGURE 3A SOULE NW ABUTMENT

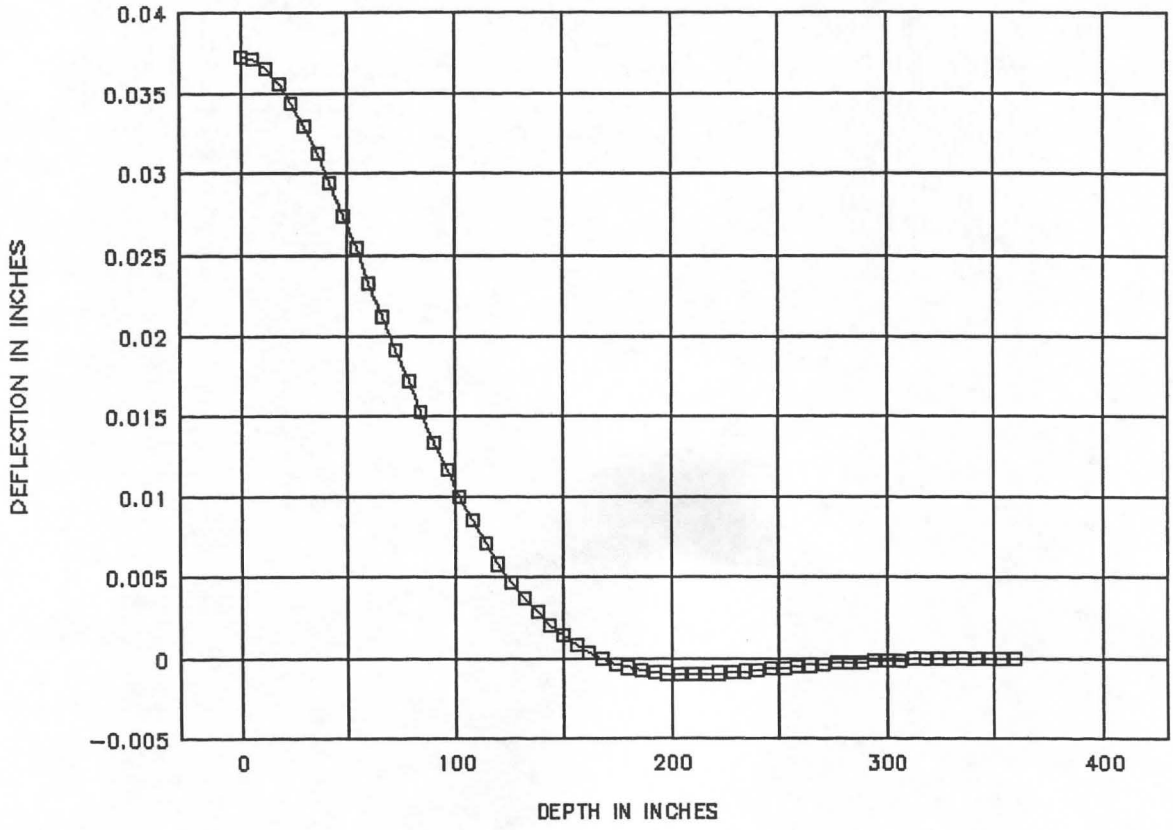

FIGURE 3B SOULE NW ABUTMENT

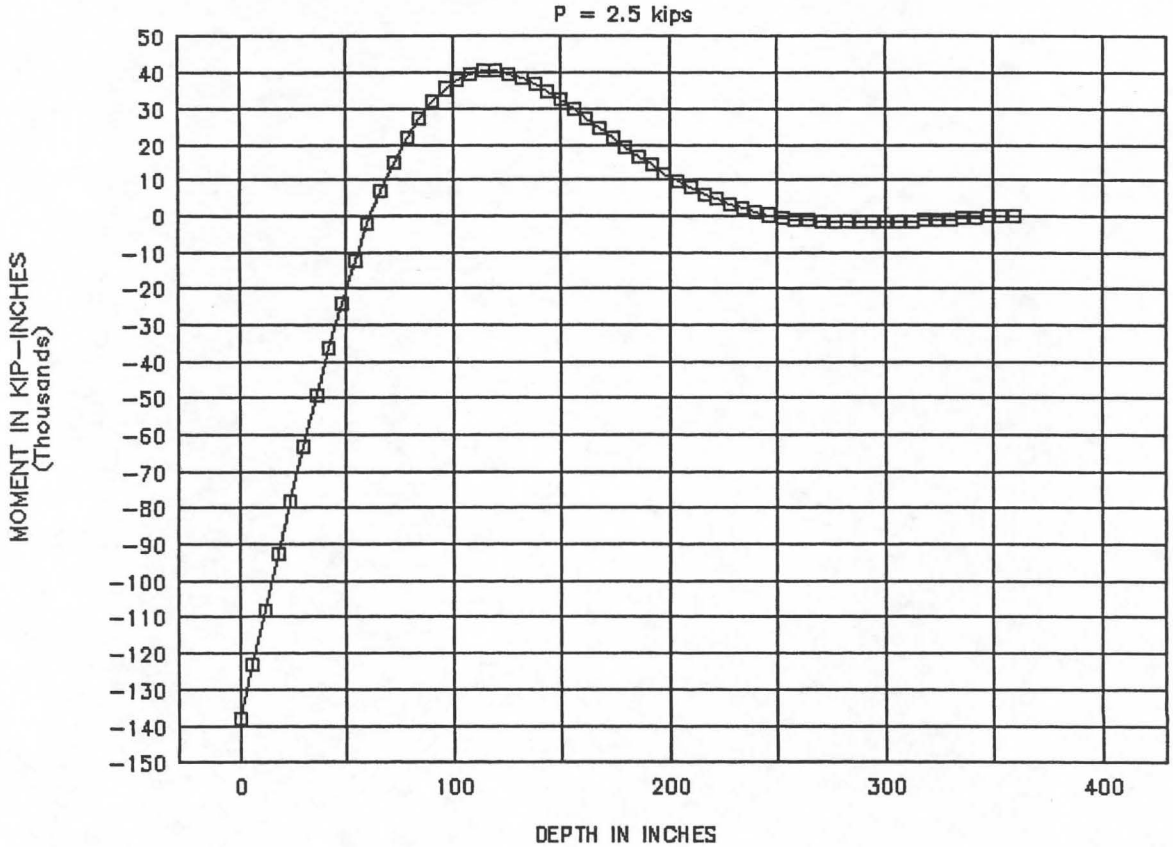

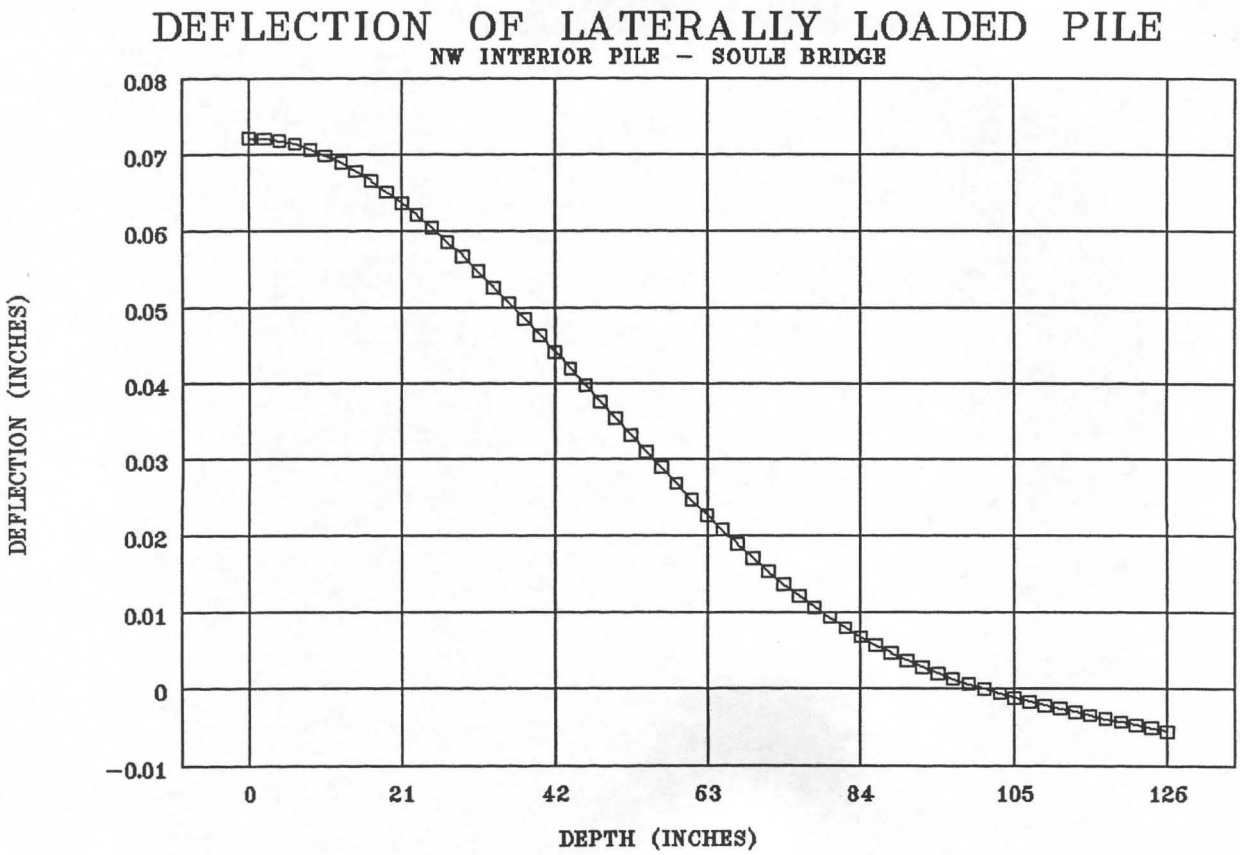
DEFLECTION OF LATERALLY LOADED PILE
NW INTERIOR PILE - SOULE BRIDGE
DEFLECTION (INCHES)
0.08
0.07
0.06
0.05
0.04
0.03
0.02
0.01
0
-0.01
0
21
42
63
84
105
126
DEPTH (INCHES)

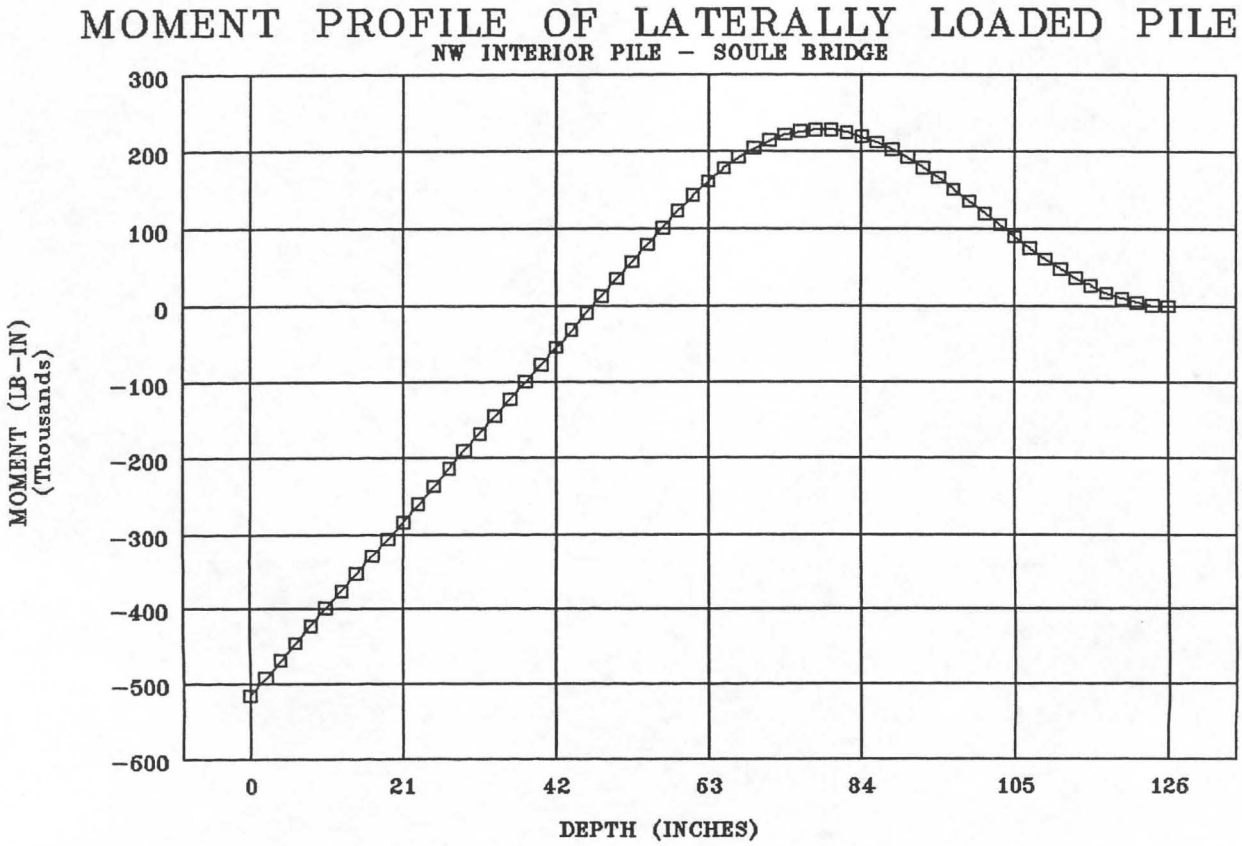
MOMENT PROFILE OF LATERALLY LOADED PILE
NW INTERIOR PILE - SOULE BRIDGE
MOMENT (LB-IN)
(Thousands)
300
200
100
0
-100
-200
-300
-400
-500
-600
0
21
42
63
84
105
126
DEPTH (INCHES)

FIGURE 4

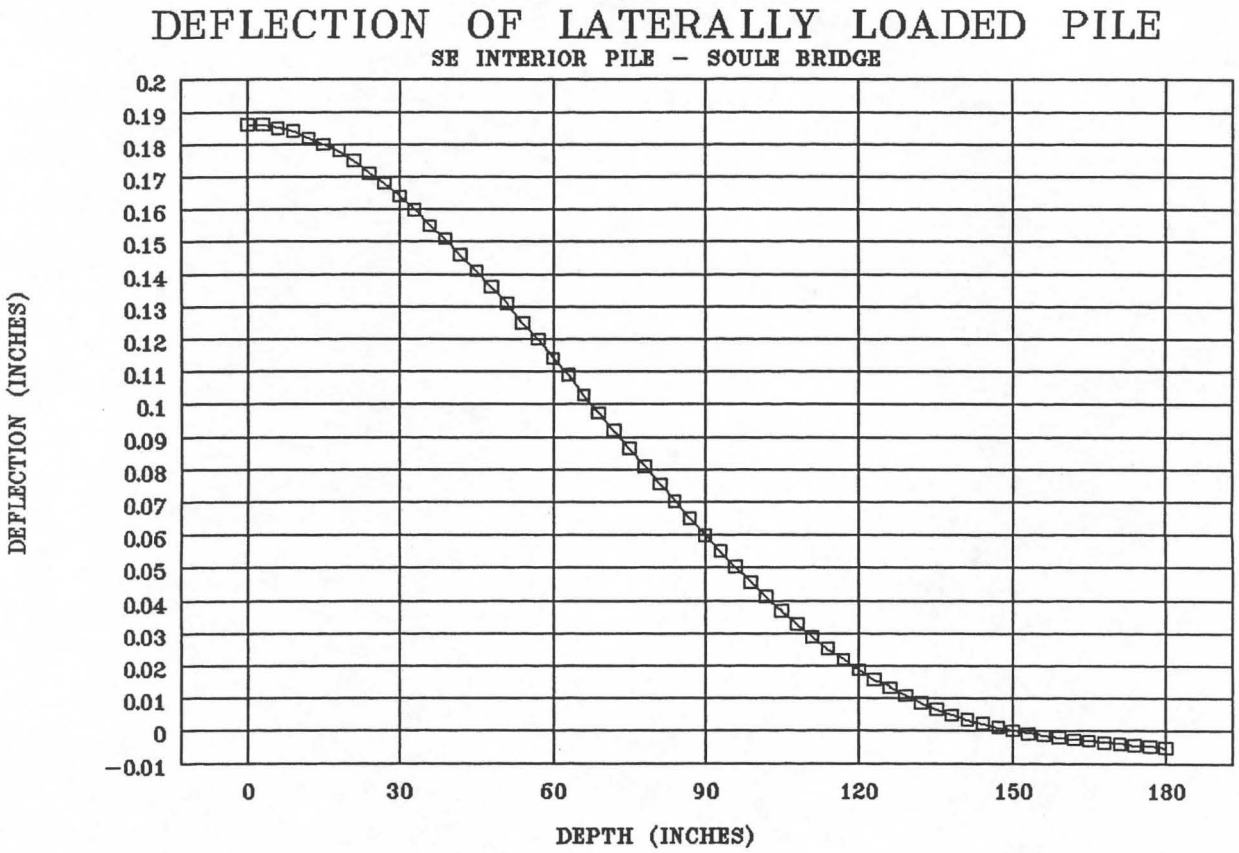
DEFLECTION OF LATERALLY LOADED PILE
SE INTERIOR PILE - SOULE BRIDGE
DEFLECTION (INCHES)
0.2
0.19
0.18
0.17
0.16
0.15
0.14
0.13
0.12
0.11
0.1
0.09
0.08
0.07
0.06
0.05
0.04
0.03
0.02
0.01
0
-0.01
0
30
60
90
120
150
180
DEPTH (INCHES)

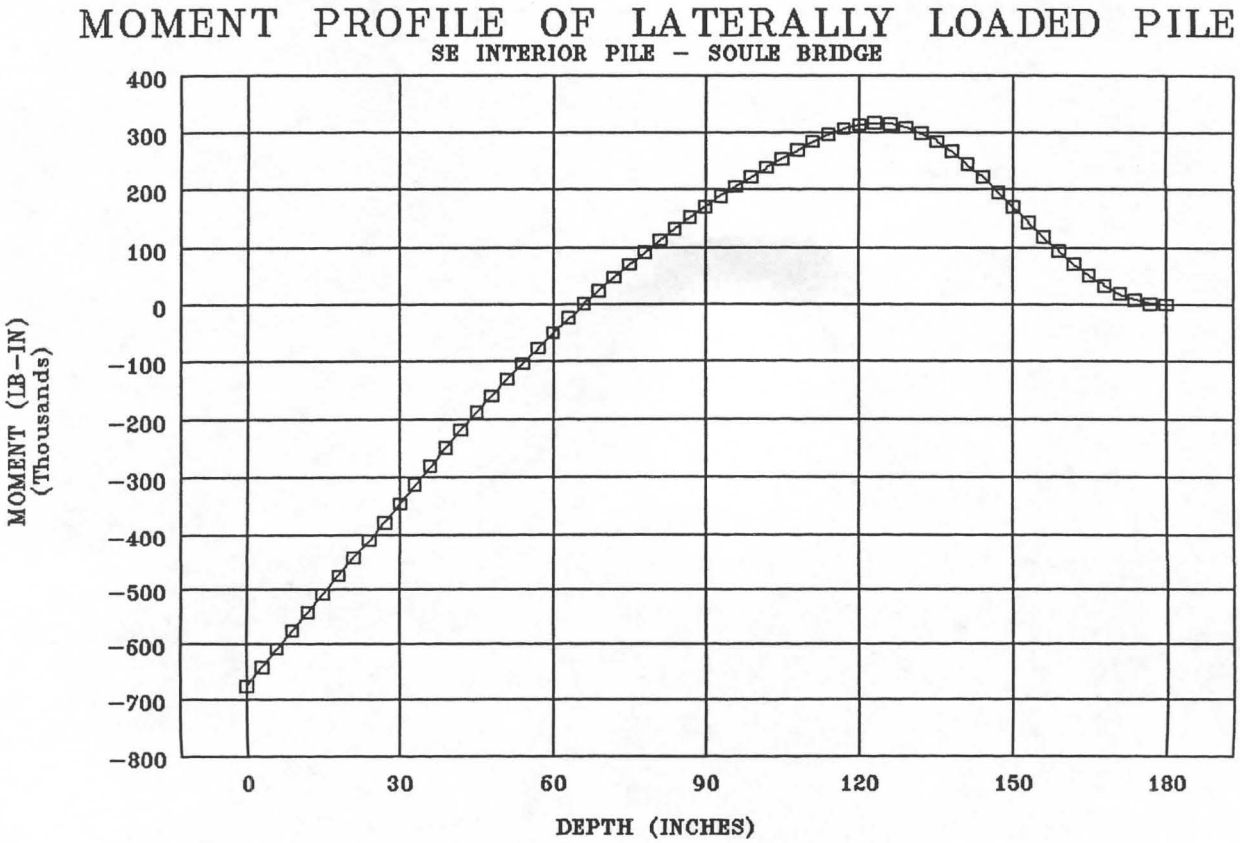
MOMENT PROFILE OF LATERALLY LOADED PILE
SE INTERIOR PILE - SOULE BRIDGE
MOMENT (LB-IN)
(Thousands)
400
300
200
100
0
-100
-200
-300
-400
-500
-600
-700
-800
0
30
60
90
120
150
180
DEPTH (INCHES)

FIGURE 5

FIGURE 6A SOULE SE ABUTMENT

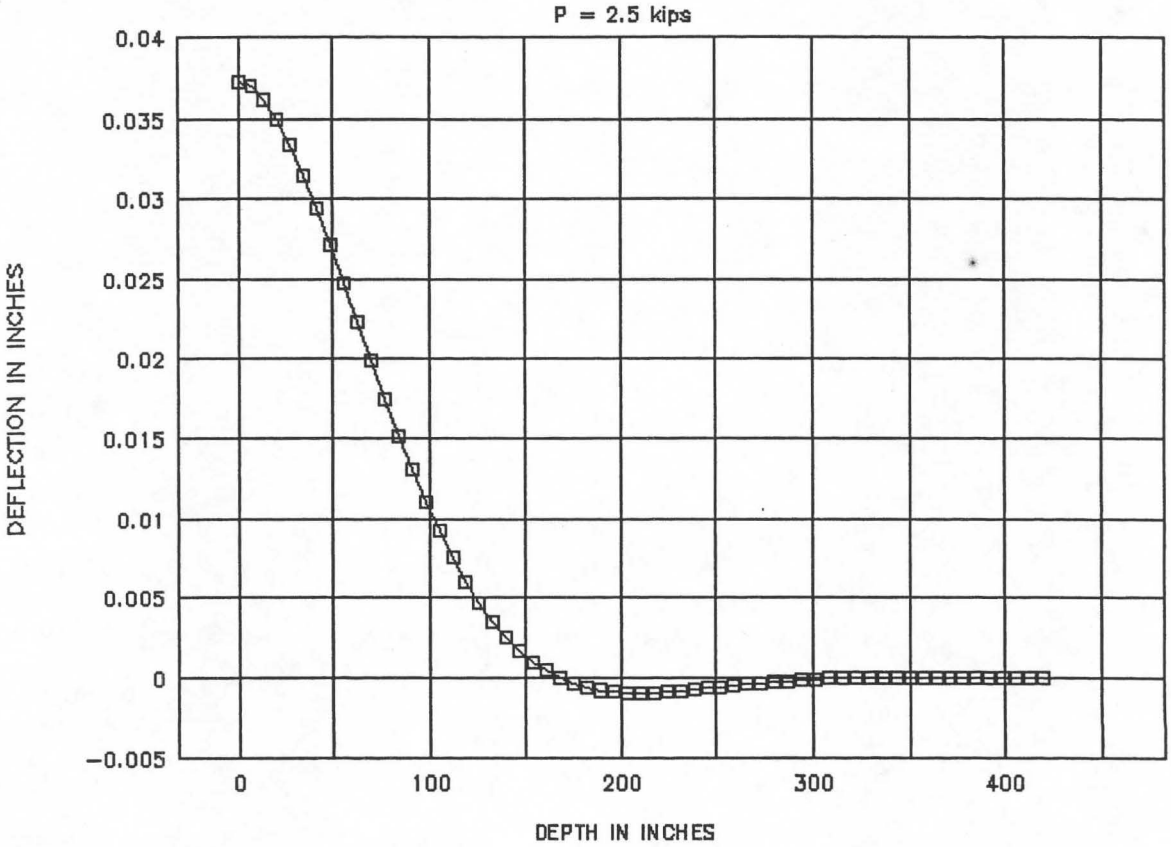

FIGURE 6B SOULE SE ABUTMENT

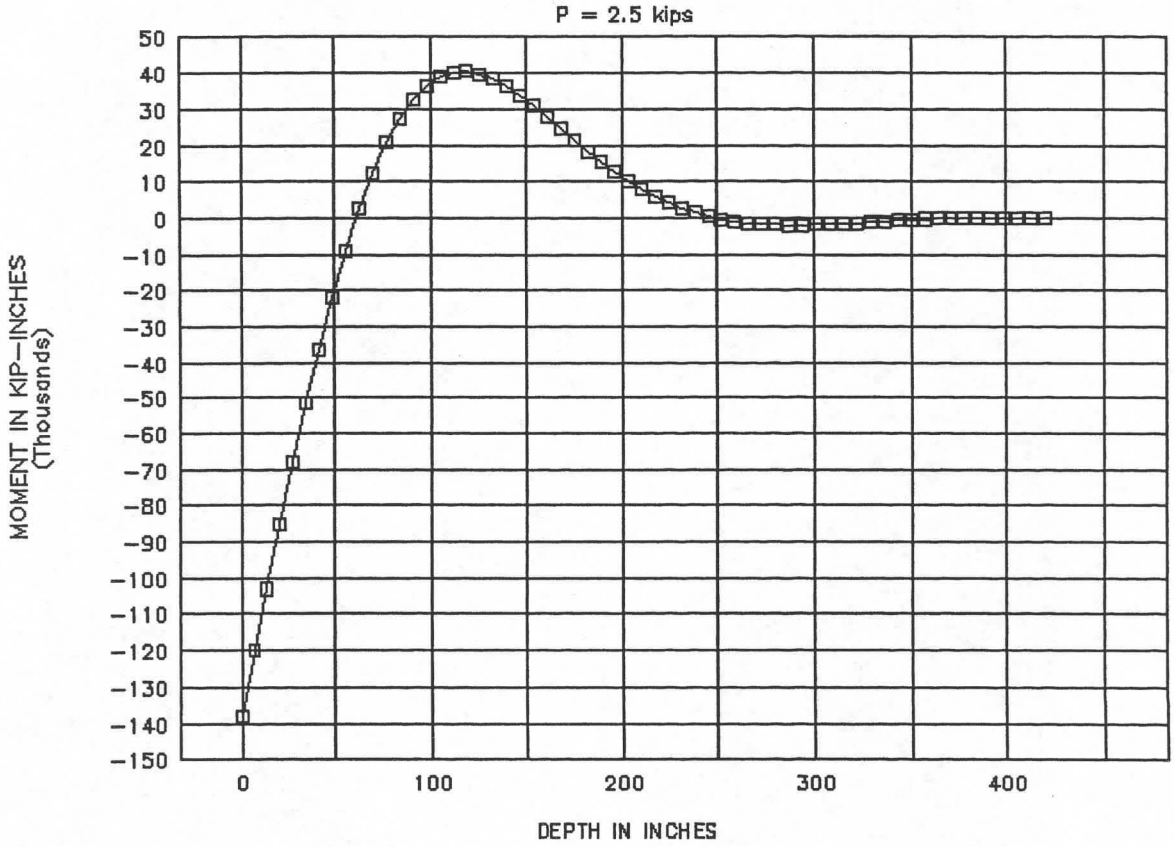

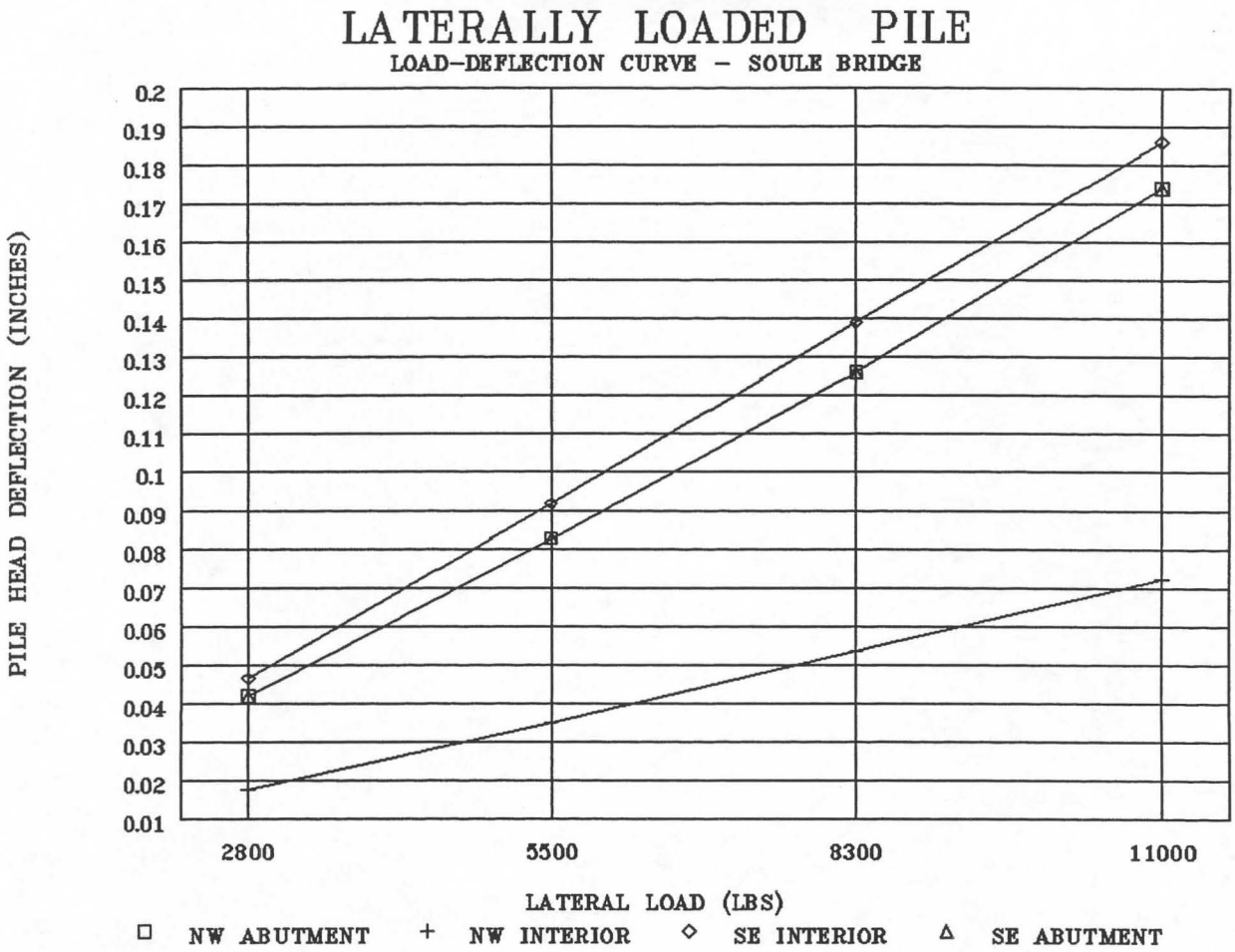
LATERALLY LOADED PILE
LOAD-DEFLECTION CURVE - SOULE BRIDGE
PILE HEAD DEFLECTION (INCHES)
0.2
0.19
0.18
0.17
0.16
0.15
0.14
0.13
0.12
0.11
0.1
0.09
0.08
0.07
0.06
0.05
0.04
0.03
0.02
0.01
2800
5500
8300
11000
LATERAL LOAD (LBS)
NW ABUTMENT
NW INTERIOR
SE INTERIOR
SE ABUTMENT

FIGURE 7

APPENDIX A

BOREHOLE LOGS

DRAFT

Unified Soil Classification System

Criteria for Assigning Group Symbols and Names			Soil Classification Generalized Group Descriptions	
COARSE-GRAINED SOILS More than 50% retained on No. 200 sieve	GRAVELS More than 50% of coarse fraction retained on No. 4 Sieve	CLEAN GRAVELS Less than 5% fines	GW	Well-graded Gravels
			GP	Poorly-graded gravels
		GRAVELS WITH FINES More than 12% fines	GM	Gravel and Silt Mixtures
			GC	Gravel and Clay Mixtures
	SANDS 50% or more of coarse fraction passes No. 4 Sieve	CLEAN SANDS Less than 5% fines	SW	Well-graded Sands
			SP	Poorly-graded Sands
		SANDS WITH FINES More than 12% fines	SM	Sand and Silt Mixtures
			SC	Sand and Clay Mixtures
FINE-GRAINED SOILS 50% or more passes the No. 200 sieve	SILTS AND CLAYS Liquid limit less than 50	INORGANIC	CL	Low-plasticity Clays
			ML	Non-plastic and Low-Plasticity Silts
		ORGANIC	OL	Non-plastic and Low-Plasticity Organic Clays Non-plastic and Low-Plasticity Organic Silts
	SILTS AND CLAYS Liquid limit greater than 50	INORGANIC	CH	High-plasticity Clays
			MH	High-plasticity Silts
		ORGANIC	OH	High-plasticity Organic Clays High-plasticity Organic Silts
HIGHLY ORGANIC SOILS	Primarily organic matter, dark in color, and organic odor		PT	Peat

Component Definitions by Gradation

Component	Size Range
Boulders	Above 12 in.
Cobbles	3 in. to 12 in.
Gravel	3 in. to No. 4 (4.76mm)
Coarse gravel	3 in. to 3/4 in.
Fine gravel	3/4 in. to No. 4 (4.76mm)
Sand	No. 4 (4.76mm) to No. 200 (0.074mm)
Coarse sand	No. 4 (4.76mm) to No. 10 (2.0mm)
Medium sand	No. 10 (2.0mm) to No. 40 (0.42mm)
Fine sand	No. 40 (0.42mm) to No. 200 (0.074mm)
Silt and Clay	Smaller than No. 200 (0.074mm)

Samples

SS	SPT Sampler (2.0" OD)
HD	Heavy Duty Split Spoon
SH	Shelby Tube
P	Pitcher Sampler
B	Bulk
C	Cored

Unless otherwise noted, drive samples advanced with 140 lb. hammer with 30 in. drop.

Relative Density or Consistency Utilizing Standard Penetration Test Values

Cohesionless Soils [a]			Cohesive Soils [b]		
Density [c]	N, blows/ft. [c]	Relative Density (%)	Consistency	N, blows/ft. [c]	Undrained Shear Strength [d] (psf)
Very loose	0 to 4	0 – 15	Very soft	0 to 2	<250
Loose	4 to 10	15 – 35	Soft	2 to 4	250–500
Compact	10 to 30	35 – 65	Firm	4 to 8	500–1000
Dense	30 to 50	65 – 85	Stiff	8 to 15	1000–2000
Very Dense	over 50	>85	Very Stiff	15 to 30	2000–4000
			Hard	over 30	>4000

(a) Soils consisting of gravel, sand, and silt, either separately or in combination, possessing no characteristics of plasticity, and exhibiting drained behavior.

(b) Soils possessing the characteristics of plasticity, and exhibiting undrained behavior.

(c) Refer to text of ASTM D 1586-84 for a definition of N; in normally consolidated cohesionless soils Relative Density terms are based on N values corrected for overburden pressures.

(d) Undrained shear strength = 1/2 unconfined compression strength.

Laboratory Tests

Test	Designation
Moisture	(1)
Density	D
Grain Size	G
Hydrometer	H
Atterberg Limits	(1)
Consolidation	C
Unconfined	U
UU Triax	UU
CU Triax	CU
CD Triax	CD
Permeability	P

(1) Moisture and Atterberg Limits plotted on log.

Descriptive Terminology Denoting Component Proportions

Descriptive Terms	Range of Proportion
Trace	0–5%
Little	5–12%
Some or Adjective [a]	12–30%
And	30–50%

(a) Use Gravelly, Sandy or Silty as appropriate.

Silt and Clay Descriptions

Description	Typical Unified Designation
Silt	ML (non-plastic)
Clayey Silt	CL–ML (low plasticity)
Silty Clay	CL
Clay	CH
Plastic Silt	MH
Organic Soils	OL, OH, Pt

Golder Associates

SOIL CLASSIFICATION/LEGEND

PROJECT: PACIFIC COUNTY

PROJECT LOCATION: SMITH CR RD

PROJECT NUMBER: 923-1165

RECORD OF BOREHOLE SO-C1

BORING DATE: 20NOV92

BORING LOCATION: SOULE BRIDGE

DATUM: MSL

DEPTH SCALE FEET	BORING METHOD	SOIL PROFILE: DESCRIPTION	USCS	GRAPHIC LOG	ELEV / DEPTH	SAMPLES: NUMBER	TYPE	BLOWS / 6 in	N	REC/ATT	PENETRATION RESISTANCE BLOWS/FT ■ (20 40 60 80) / WATER CONTENT, PERCENT Wp W Wl (20 40 60 80)	PIEZOMETER OR STANDPIPE INSTALLATION
16		16.6 ft from top of bridge deck to soil surface.			148.40							
	4 IN. I.D. HSA	Very loose to compact, olive gray (5Y4/1), horizontally stratified, silty fine SAND to SILT and fine SAND, little to some wood fragments, wet, (ALLUVIUM)			16.60							Groundwater encountered at ground surface during drilling
18						1	SS	0,0,1	1	100	■	
20			SM			2	SS	10,6,9	15	50	■	
22						3	SS	3,6,5	11	100	■	
24												
26		Very stiff to hard, dark gray (N3), massive, SILT and CLAY, slightly damp, (TERTIARY MARINE DEPOSIT)			139.50 / 25.50	4	SS	2,4,12	16	100	■	
28			ML-CL			5	SS	12,29,34	63	100	■	
30												
32		(log continued on page 2)										

DRILL RIG: MOBILE-B61

DRILLING CONTRACTOR: HOLT

DRILLER: C. RICHARD

Golder Associates

LOGGED: S BRANDENBERGER

CHECKED: D. FINDLEY

DATE: 19NOV92

PROJECT: PACIFIC COUNTY

PROJECT LOCATION: SMITH CR RD

PROJECT NUMBER: 923-1165

RECORD OF BOREHOLE SO-C1

BORING DATE: 20NOV92

BORING LOCATION: SOULE BRIDGE

DATUM: MSL

DEPTH SCALE FEET	BORING METHOD	SOIL PROFILE: DESCRIPTION	USCS	GRAPHIC LOG	ELEV / DEPTH	SAMPLES: NUMBER	TYPE	BLOWS / 6 in	N	REC/ATT	PENETRATION RESISTANCE BLOWS/FT ■ (20 40 60 80) / WATER CONTENT, PERCENT (Wp 20 — W — 40 60 — Wl 80)	PIEZOMETER OR STANDPIPE INSTALLATION
32		Hard, dark gray (N3), massive, SILT and CLAY, slightly damp, (TERTIARY MARINE DEPOSIT)	ML-CL									
						6	SS	30,50/0.3	100	100		
					131.00							
34		Borehole terminated at 34.0 feet, 11-20-92. No groundwater seepage encountered below 25.5 feet.			34.00							
36												
38												
40												
42												
44												
46												
48												

DRILL RIG: MOBILE-B61

DRILLING CONTRACTOR: HOLT

DRILLER: C. RICHARD

Golder Associates

LOGGED: S BRANDENBERGER

CHECKED: D. FINDLEY

DATE: 19NOV92

PROJECT: PACIFIC COUNTY

PROJECT LOCATION: SMITH CR RD

PROJECT NUMBER: 923-1165

RECORD OF BOREHOLE SO-C2

BORING DATE: 20NOV92

BORING LOCATION: SOULE BRIDGE

SHEET: 1 OF 2

DATUM: MSL

DEPTH SCALE FEET	BORING METHOD	SOIL PROFILE: DESCRIPTION	USCS	GRAPHIC LOG	ELEV / DEPTH	SAMPLES: NUMBER	TYPE	BLOWS / 6 in	N	REC/ATT	PENETRATION RESISTANCE BLOWS/FT ■ (20 40 60 80) / WATER CONTENT, PERCENT Wp W Wl (20 40 60 80)	PIEZOMETER OR STANDPIPE INSTALLATION
20												
22		22.5 feet from top of bridge deck to soil surface.										
	4 IN. I.D. HSA	Loose, olive gray (5Y4/1), horizontally stratified, silty fine SAND, some wood fragments, wet, (ALLUVIUM)	SM		142.50 / 22.50							Groundwater encountered at ground surface during drilling
24						1	SS	1,1,0	1	80	■	
26						2	SS	1,1,1	2	100	■	
		Hard, dark gray (N3), massive, CLAY, slightly damp, (TERTIARY MARINE DEPOSIT)	CH		138.00 / 27.00							
28						3	SS	10,27,50/.4	100	100		■
30												
32												
34						4	SS	21,50	100	100	○———	■
36		(log continued on page 2)										

DRILL RIG: MOBILE B-61

DRILLING CONTRACTOR: HOLT

DRILLER: C RICHARD

Golder Associates

LOGGED: S BRANDENBERGER

CHECKED: D. FINDLEY

DATE: 20NOV92

PROJECT: PACIFIC COUNTY

PROJECT LOCATION: SMITH CR RD

PROJECT NUMBER: 923-1165

RECORD OF BOREHOLE SO-C2

BORING DATE: 20NOV92

BORING LOCATION: SOULE BRIDGE

SHEET: 2 OF 2

DATUM: MSL

DEPTH SCALE FEET	BORING METHOD	SOIL PROFILE: DESCRIPTION	USCS	GRAPHIC LOG	ELEV / DEPTH	SAMPLES: NUMBER	TYPE	BLOWS / 6 in	N	REC/ATT	PENETRATION RESISTANCE BLOWS/FT ■ (20 40 60 80) / WATER CONTENT, PERCENT Wp W Wl (20 40 60 80)	PIEZOMETER OR STANDPIPE INSTALLATION
36		Hard, dark gray (N3), massive, CLAY, slightly damp, (TERTIARY MARINE DEPOSIT)	CH									
38						5	SS	21,50/.4	100		■	
					126.10 / 38.90							
		Borehole terminated at 38.9 feet, 11-20-92. No groundwater seepage in borehole below 27.5 feet.										
40												
42												
44												
46												
48												
50												
52												

DRILL RIG: MOBILE B-61

DRILLING CONTRACTOR: HOLT

DRILLER: C RICHARD

Golder Associates

LOGGED: S BRANDENBERGER

CHECKED: D. FINDLEY

DATE: 20NOV92

PROJECT: PACIFIC COUNTY

PROJECT LOCATION: SMITH CR RD

PROJECT NUMBER: 923-1165

RECORD OF BOREHOLE SO-E

BORING DATE: 18NOV92

BORING LOCATION: SOULE BRIDGE

SHEET: 1 OF 3

DATUM: MSL

DEPTH SCALE FEET	BORING METHOD	SOIL PROFILE: DESCRIPTION	USCS	GRAPHIC LOG	ELEV / DEPTH	SAMPLES: NUMBER	TYPE	BLOWS / 6 in	N	REC/ATT	PENETRATION RESISTANCE BLOWS/FT ■ (20 40 60 80) / WATER CONTENT, PERCENT Wp W Wl (20 40 60 80)	PIEZOMETER OR STANDPIPE INSTALLATION
0		0-0.1 ft: Asphalt										
		0.1-0.3 ft: SAND and GRAVEL, (FILL)	SW-GW									
		0.3-0.5 ft: Asphalt			0.50							
2		Compact, dusky yellowish brown (10YR2/2), SAND and subangular to subrounded GRAVEL, trace to little silt, little cobbles, moist, (FILL)				1	SS	10,11,9	20	40	■	
			SW-GW									
4						2	SS	5,5,5	10	33	■	
					157.50 / 5.50							
6		Very loose to loose, moderate brown (5Y4/4), faintly horizontally laminated to massive, SILT, trace fine sand, wet, (FLOOD PLAIN DEPOSIT)										
8						3	SS	3,5,3	8	67	■	
10			MH									Groundwater encountered at approximately 11 feet during drilling
12												
14						4	SS	1,2,2	4	100	■	
16		(log continued on page 2)										

DRILL RIG: MOBILE B-61

DRILLING CONTRACTOR: HOLT

DRILLER: C. RICHARD

Golder Associates

LOGGED: S BRANDENBERGER

CHECKED: D. FINDLEY

DATE: 18NOV92

PROJECT: PACIFIC COUNTY

PROJECT LOCATION: SMITH CR RD

PROJECT NUMBER: 923-1165

RECORD OF BOREHOLE SO-E

BORING DATE: 18NOV92

BORING LOCATION: SOULE BRIDGE

DATUM: MSL

DEPTH SCALE FEET	BORING METHOD	SOIL PROFILE DESCRIPTION	USCS	GRAPHIC LOG	ELEV / DEPTH	SAMPLES NUMBER	TYPE	BLOWS / 6 in	N	REC/ATT	PENETRATION RESISTANCE BLOWS/FT ■ (20 40 60 80) / WATER CONTENT, PERCENT Wp W Wl (20 40 60 80)	PIEZOMETER OR STANDPIPE INSTALLATION
16	4 IN. I.D. HSA	Loose to very loose, moderate brown (5Y4/4), faintly horizontally laminated to massive, SILT, trace fine sand, wet, (FLOOD PLAIN DEPOSIT)	MH									
18		Loose, olive gray (5Y4/1) to dark gray (N3), horizontally stratified, SILT and fine SAND, trace to little wood pieces, wet, (ALLUVIUM)	SM-ML		144.50 / 18.50	5	SS	2,2,3	5	100	■	
20												
22												
24						6	SS	1,3,5	8	100	■	
26		Hard, dark gray (N3), faintly horizontally stratified, CLAY, trace very fine sand, slightly damp, (TERTIARY MARINE DEPOSIT)	CH		137.00 / 26.00							
28						7	SS	28,50	100	100	■	
30												
32		(log continued on page 3)										

DRILL RIG: MOBILE B-61

DRILLING CONTRACTOR: HOLT

DRILLER: C. RICHARD

Golder Associates

LOGGED: S BRANDENBERGER

CHECKED: D. FINDLEY

DATE: 18NOV92

PROJECT: PACIFIC COUNTY

PROJECT LOCATION: SMITH CR RD

PROJECT NUMBER: 923-1165

RECORD OF BOREHOLE SO-E

BORING DATE: 18NOV92

BORING LOCATION: SOULE BRIDGE

DATUM: MSL

DEPTH SCALE FEET	BORING METHOD	SOIL PROFILE: DESCRIPTION	USCS	GRAPHIC LOG	ELEV / DEPTH	SAMPLES: NUMBER	TYPE	BLOWS / 6 in	N	REC/ATT	PENETRATION RESISTANCE BLOWS/FT ■ (20 40 60 80) / WATER CONTENT, PERCENT Wp ⊢—○W—⊣ Wl (20 40 60 80)	PIEZOMETER OR STANDPIPE INSTALLATION
32		Hard, dark gray (N3), very weakly horizontally stratified, CLAY and SILT, trace very fine sand, slightly damp, (TERTIARY MARINE DEPOSIT)										
34						8	SS	14,22,29	51	100	■	
36			CH									
38						9	SS	27,50/0.4	100		■	
		Borehole terminated at 38.9 feet, 11-18-92. No groundwater seepage encountered below 26 feet. Water level in borehole at 23.5 feet.			124.10 / 38.90							
40												
42												
44												
46												
48												

DRILL RIG: MOBILE B-61

DRILLING CONTRACTOR: HOLT

DRILLER: C. RICHARD

Golder Associates

LOGGED: S BRANDENBERGER

CHECKED: D. FINDLEY

DATE: 18NOV92

PROJECT: PACIFIC CO.

PROJECT LOCATION: SMITH CR RD

PROJECT NUMBER: 923-1165

RECORD OF BOREHOLE SO-W

BORING DATE: 19NOV92

BORING LOCATION: SOULE BRIDGE

DATUM: MSL

DEPTH SCALE FEET	BORING METHOD	SOIL PROFILE: DESCRIPTION	USCS	GRAPHIC LOG	ELEV / DEPTH	SAMPLES: NUMBER	TYPE	BLOWS / 6 in	N	REC/ATT	PENETRATION RESISTANCE BLOWS/FT ■ (20 40 60 80) / WATER CONTENT, PERCENT Wp ⊢—○W—⊣ Wl (20 40 60 80)	PIEZOMETER OR STANDPIPE INSTALLATION
0		0-0.1 ft: Asphalt.			164.90 / 0.10							
		Dense, dusky yellowish brown (10YR2/2), nonstratified, SAND and GRAVEL, little silt, damp, (FILL)	SW-GW			1	SS	46,21,10	31	87	■	
2					162.50 / 2.50							
		Very loose to loose, moderate brown (5YR3/4), SILT, little to some clay, trace gravel, trace fine sand, (FLOOD PLAIN DEPOSIT)	MH-CH			2	SS	4,3,4	7	30	■	
4												
6						3	SS	1,2,1	3	13	■	
		Very loose to loose, moderate brown (5YR4/4), massive, SILT, little fine sand, moist, (ALLUVIUM)	ML		158.00 / 7.00							
8						4	SS	1,2,2	4	100	■	
10												
		Loose, moderate brown (5YR4/4), faintly horizontally stratified, silty fine SAND to SILT and fine SAND, wet (ALLUVIUM)	SM-ML		154.00 / 11.00							
12												
14						5	SS	2,3,3	6	80	■ ○	
												Groundwater encountered at approximately 15 feet during drilling
16		(log continued on page 2)										

DRILL RIG: MOBILE B-61

DRILLING CONTRACTOR: HOLT

DRILLER: C. RICHARD

Golder Associates

LOGGED: S BRANDENBERGER

CHECKED: D. FINDLEY

DATE: 19NOV92

PROJECT: PACIFIC CO.

PROJECT LOCATION: SMITH CR RD

PROJECT NUMBER: 923-1165

RECORD OF BOREHOLE SO-W

BORING DATE: 19NOV92

BORING LOCATION: SOULE BRIDGE

DATUM: MSL

DEPTH SCALE FEET	BORING METHOD	SOIL PROFILE: DESCRIPTION	USCS	GRAPHIC LOG	ELEV / DEPTH	SAMPLES: NUMBER	TYPE	BLOWS / 6 in	N	REC/ATT	PENETRATION RESISTANCE BLOWS/FT ■ (20 40 60 80) / WATER CONTENT, PERCENT Wp O W Wl (20 40 60 80)	PIEZOMETER OR STANDPIPE INSTALLATION
16	4 IN. I.D. HSA	Loose, moderate brown (5YR4/4), faintly horizontally stratified, silty fine SAND, to SILT and fine SAND, wet (ALLUVIUM)	SM-ML									
18					146.50 / 18.50							
		Very loose, olive gray (5Y4/1), horizontally stratified, fine SAND, some silt, trace to little wood fragments, wet, (ALLUVIUM)				6	SS	1,1,0	1	100	■	
20												
22			SM									
						7	SS	1,1,3	4	100	■ O	
24												
26												
					138.00 / 27.00							
		Hard, dark gray (N3), massive to very faintly horizontally laminated, CLAY, trace fine sand, slightly damp, (TERTIARY MARINE DEPOSIT)										
28						8	SS	22,50	100	100		■
			CH									
30												
		(log continued on page 3)										
32												

DRILL RIG: MOBILE B-61

DRILLING CONTRACTOR: HOLT

DRILLER: C. RICHARD

Golder Associates

LOGGED: S BRANDENBERGER

CHECKED: D. FINDLEY

DATE: 19NOV92

PROJECT: PACIFIC CO.

PROJECT LOCATION: SMITH CR RD

PROJECT NUMBER: 923-1165

RECORD OF BOREHOLE SO-W

BORING DATE: 19NOV92

BORING LOCATION: SOULE BRIDGE

SHEET: 3 OF 3

DATUM: MSL

DEPTH SCALE FEET	BORING METHOD	SOIL PROFILE: DESCRIPTION	USCS	GRAPHIC LOG	ELEV / DEPTH	SAMPLES: NUMBER	TYPE	BLOWS / 6 in	N	REC/ATT	PENETRATION RESISTANCE BLOWS/FT ■ (20 40 60 80) / WATER CONTENT, PERCENT Wp ⊢—○W—⊣ Wl (20 40 60 80)	PIEZOMETER OR STANDPIPE INSTALLATION
32		Hard, dark gray (N3), massive to very faintly horizontally laminated, CLAY, trace fine sand, slightly damp, (TERTIARY MARINE DEPOSIT)	CH									
						9	SS	19,50/0.1	100	100	■	
34												
36												
38						10	SS	28,50/0.3	100	100	■	
					126.20 / 38.80							
		Borehole terminated at 38.8 feet, 11-19-92. No seepage observed in borehole below 27.0 feet.										
40												
42												
44												
46												
48												

DRILL RIG: MOBILE B-61

DRILLING CONTRACTOR: HOLT

DRILLER: C. RICHARD

Golder Associates

LOGGED: S BRANDENBERGER

CHECKED: D. FINDLEY

DATE: 19NOV92

APPENDIX B

LABORATORY TEST RESULTS

DRAFT

SUMMARY OF ATTERBERG LIMITS

BORING	SAMPLE NUMBER	DEPTH	LIQUID LIMIT	PLASTIC LIMIT	PLASTICITY INDEX	MOISTURE CONTENT
SO-E	4	13.0 - 14.5	59	39	20	50.7%
SO-C2	4	33.0 - 34.0	74	22	52	23.4%

DRAFT

PARTICLE SIZE DISTRIBUTION

US STANDARD SIEVE OPENING SIZES

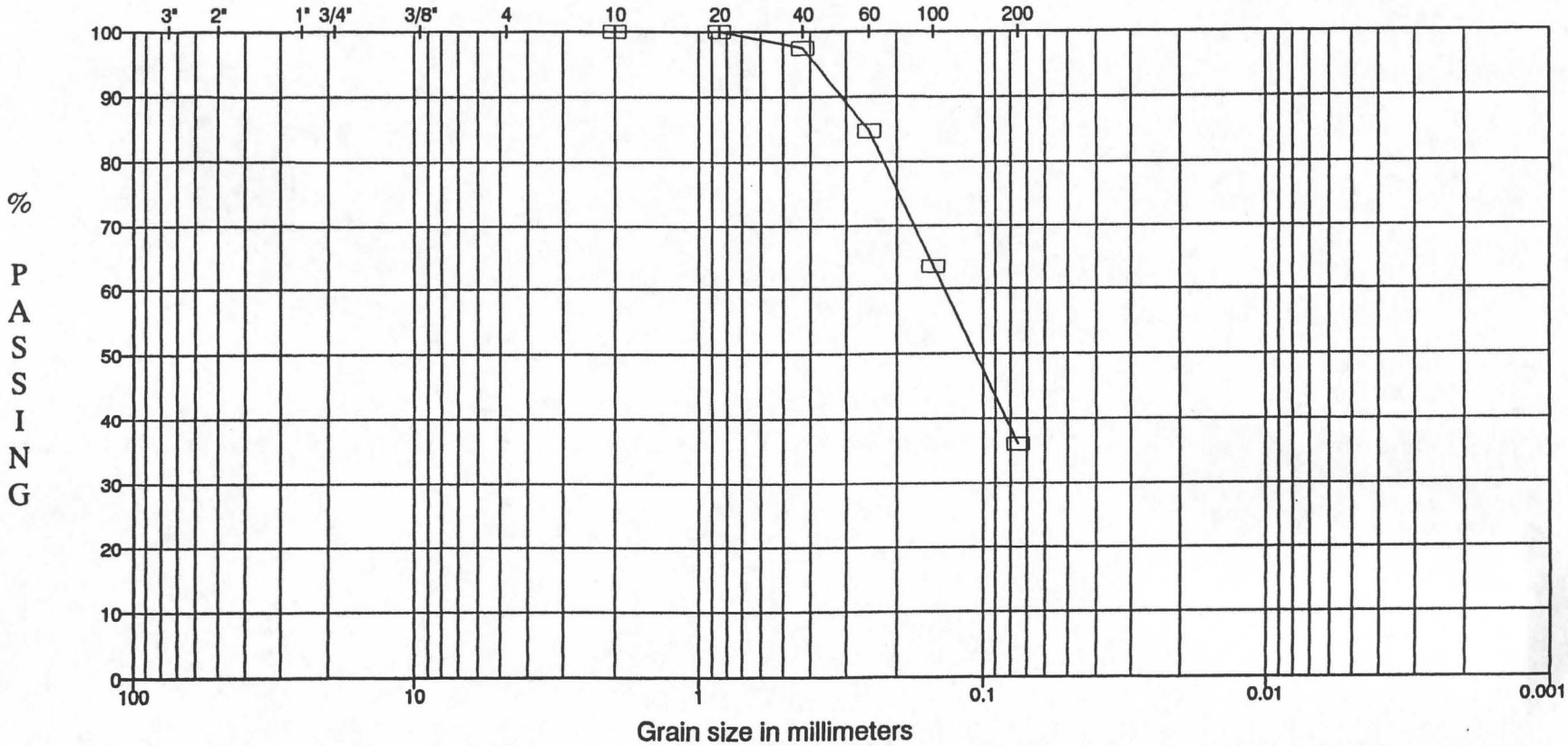

Coarse	Fine	C	Med	Fine	
GRAVEL		SAND			FINES (Silt or Clay)

SAMPLE ID	DEPTH	W%	LL	PL	PI	USCS	DESCRIPTION
SO-W 5	13.0-14.5	33.6				SM	Light olive brown (5Y 5/6) to moderate yellowish brown (10YR 5/4), f SAND and SILT, (SM).

PROJECT: PACIFIC COUNTY/SOULE BRIDGE/WA

PROJECT NO.: 923-1166 DATE: 12-2-92 TECH: BFW REVIEW: DPO

GOLDER ASSOCIATES INC.
REDMOND, WA

PARTICLE SIZE DISTRIBUTION

US STANDARD SIEVE OPENING SIZES

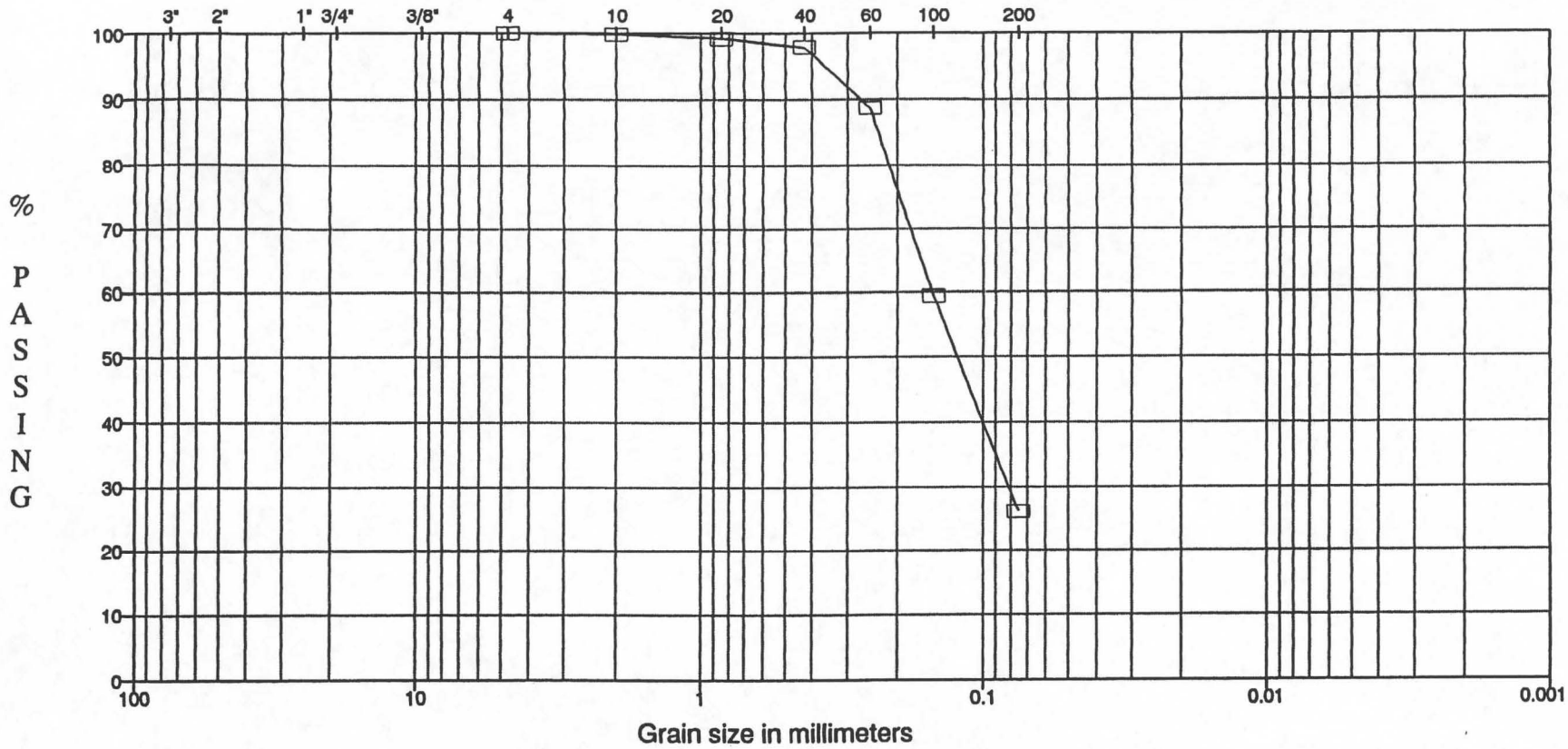

Coarse	Fine	C	Med	Fine	
GRAVEL		SAND			FINES (Silt or Clay)

SAMPLE ID	DEPTH	W%	LL	PL	PI	USCS	DESCRIPTION
SO-W 7	23.0-24.5	47.8				SM	Olive gray (5Y 3/2), f SAND, some silt, organic material present, (SM).

PROJECT: PACIFIC COUNTY/SOULE BRIDGE/WA

PROJECT NO.: 923-1166 DATE: 12-2-92 TECH: BFW REVIEW: DPO

GOLDER ASSOCIATES INC.
REDMOND, WA

Boring:	SO-C2
Sample:	3
Depth (ft):	27.5-28.4

Description: Very stiff, dark olive gray (5 Y 3/1), CLAY, little f sand, (CH).

Diameter (cm):	3.617
Length (cm):	7.472
Water Content (%):	20.1
Dry Density (pcf):	106.6
Strain Rate (%/min):	0.47
Peak Stress (psf):	16786
Strain at Peak Stress:	14.2%

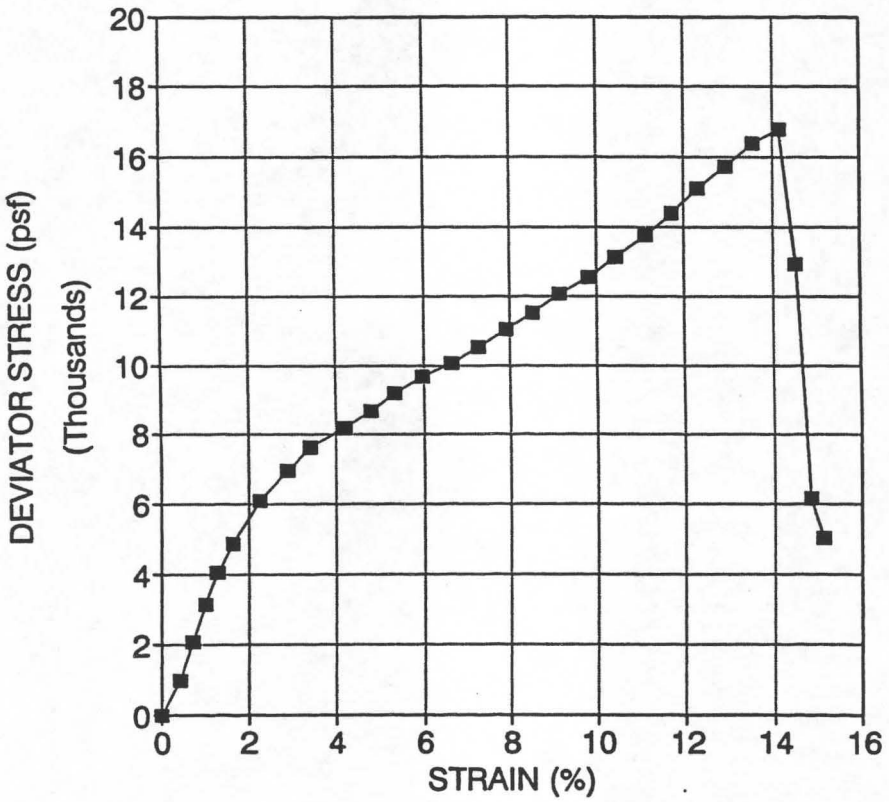

UNCONFINED COMPRESSIVE STRENGTH OF COHESIVE SOIL
ASTM D-2166

Project: PACIFIC CO./SOULE BRIDGE/WA
Project No.: 923-1166 Date: 12-10-9 Tech: DPO Review: DPO

Golder Associates Inc. Redmond, WA

ec.31, T.15N., R.8W. W.M.

Arbitrary County Datum
Assumed

NOTES

1. Drawing reference is "Soule Bridge Replacement, Pacific County, Washington, Layout", prepared by Sargent Engineers Inc., undated.
2. Boring locations are approximate based on taped measurments from the proposed bridge centerline and abutments as established by Pacific County.
3. Data concerning the various strata have been obtained at exploration locations only. The soil stratigraphy between these locations has been inferred from geological evidence and so may vary from that shown.

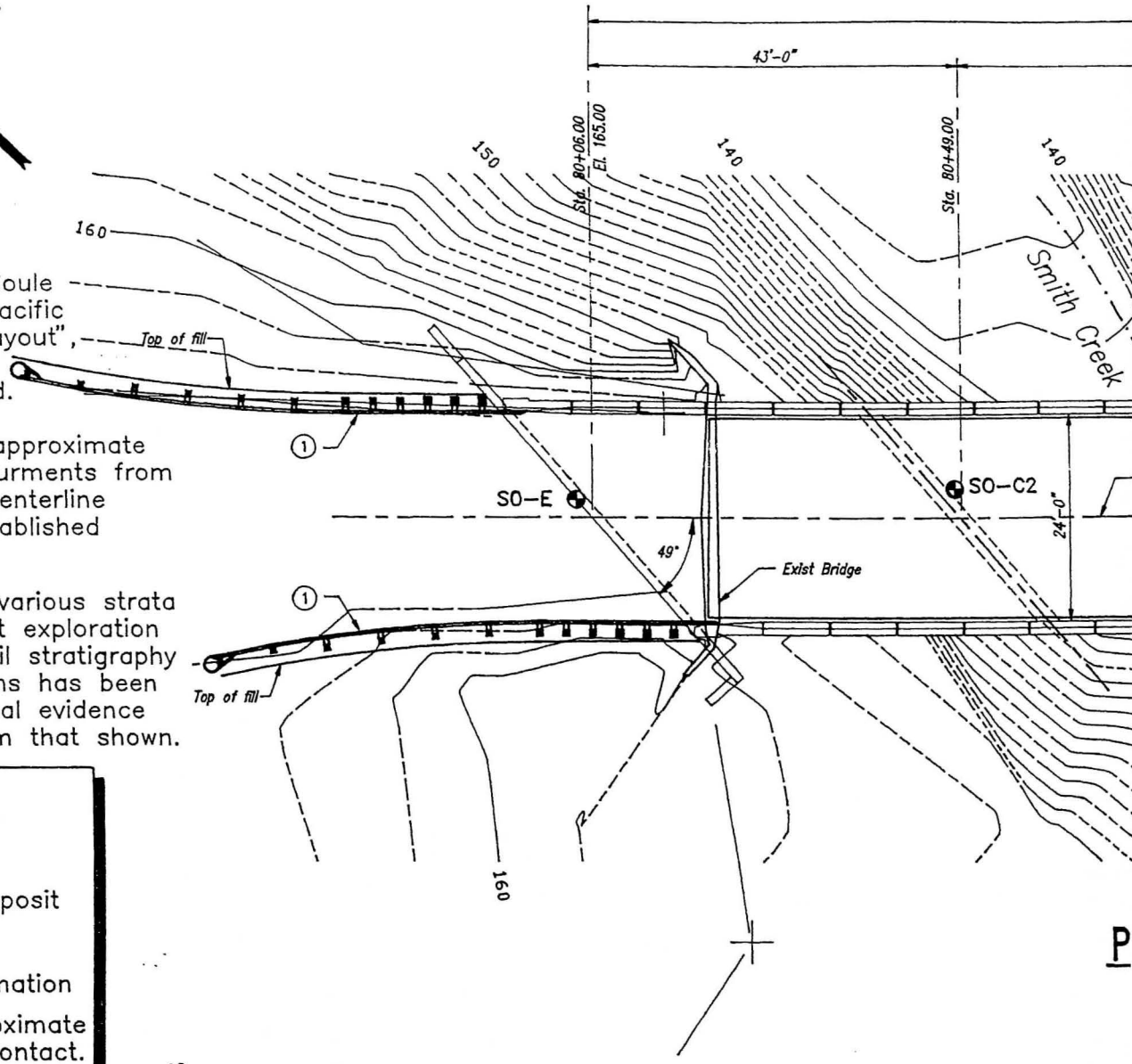

EXPLANATION

af — Fill
Qfp — Flood Plain Deposit
Qal — Alluvium
Tal — Astoria(?) Formation
- - - - Indicates Approximate Stratigraphic Contact.

SM-W ⊕ Number and Approximate Location of Boring

SM-W — Borehole Number

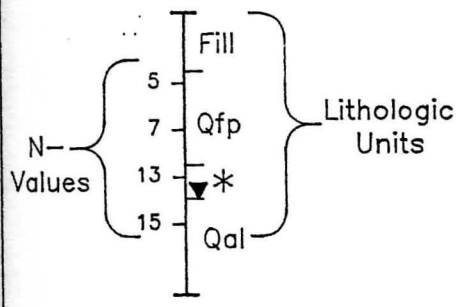

* Groundwater Level at Time of Drilling

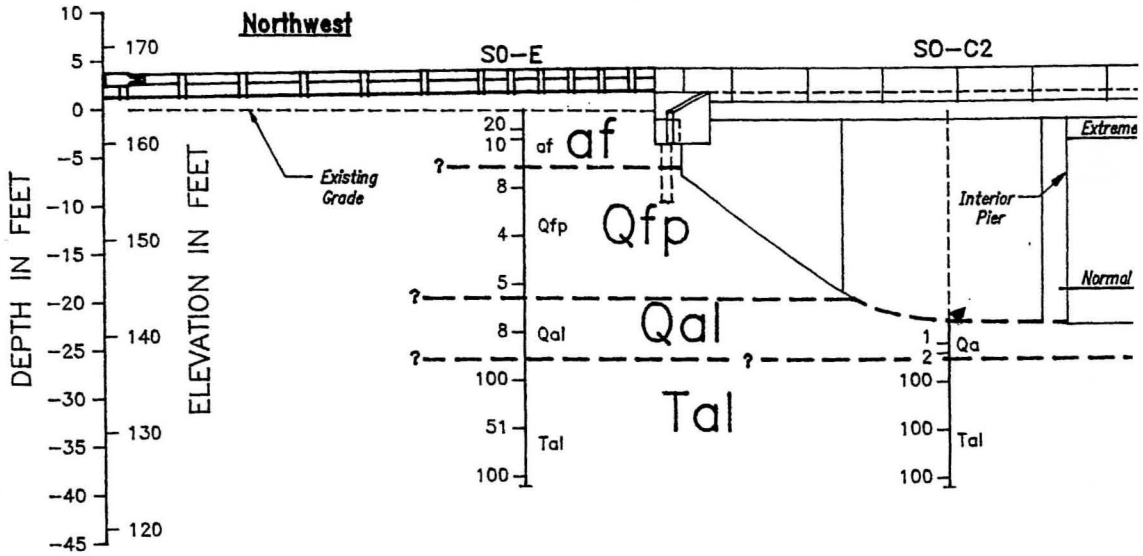

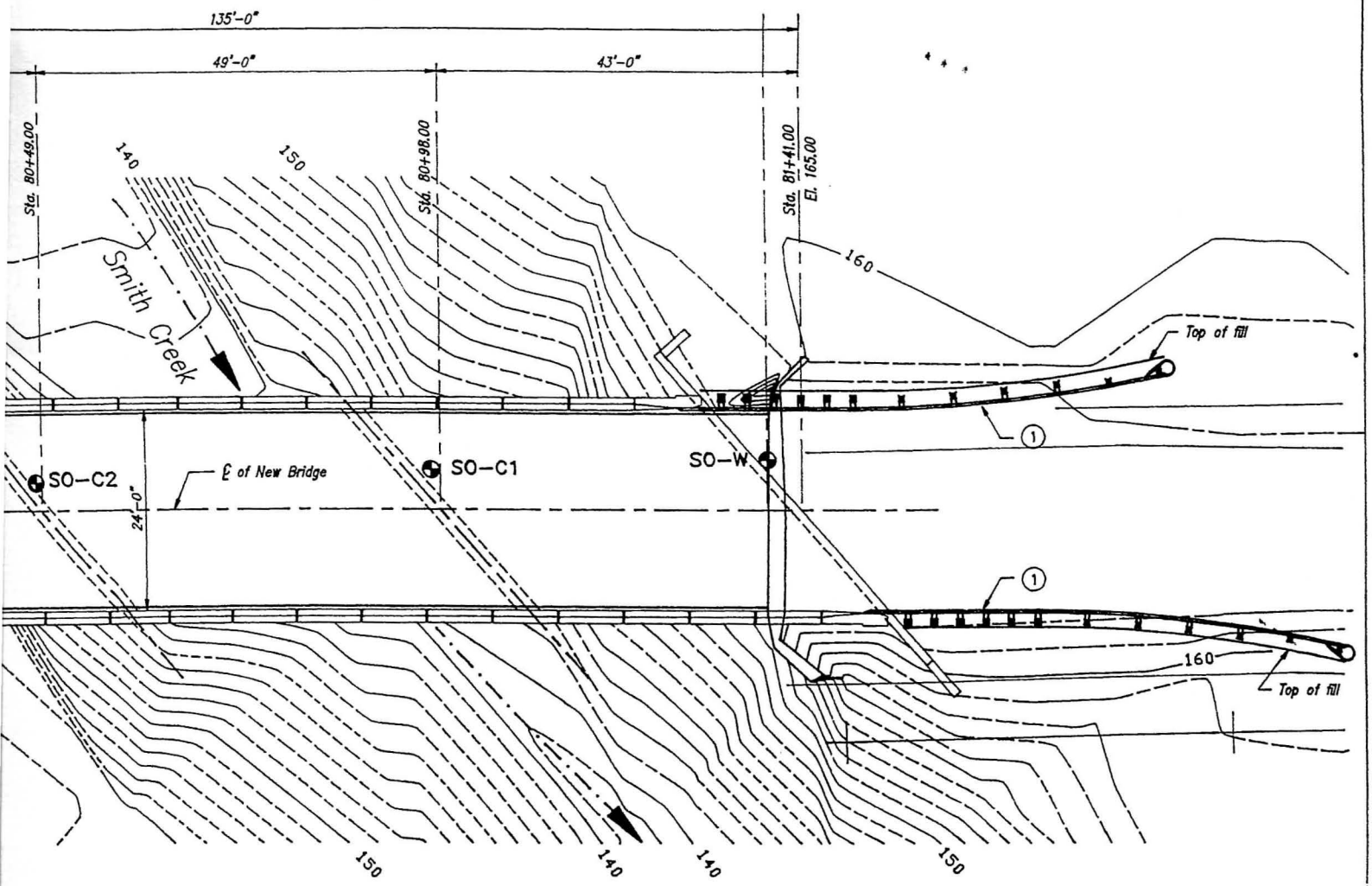

PLAN

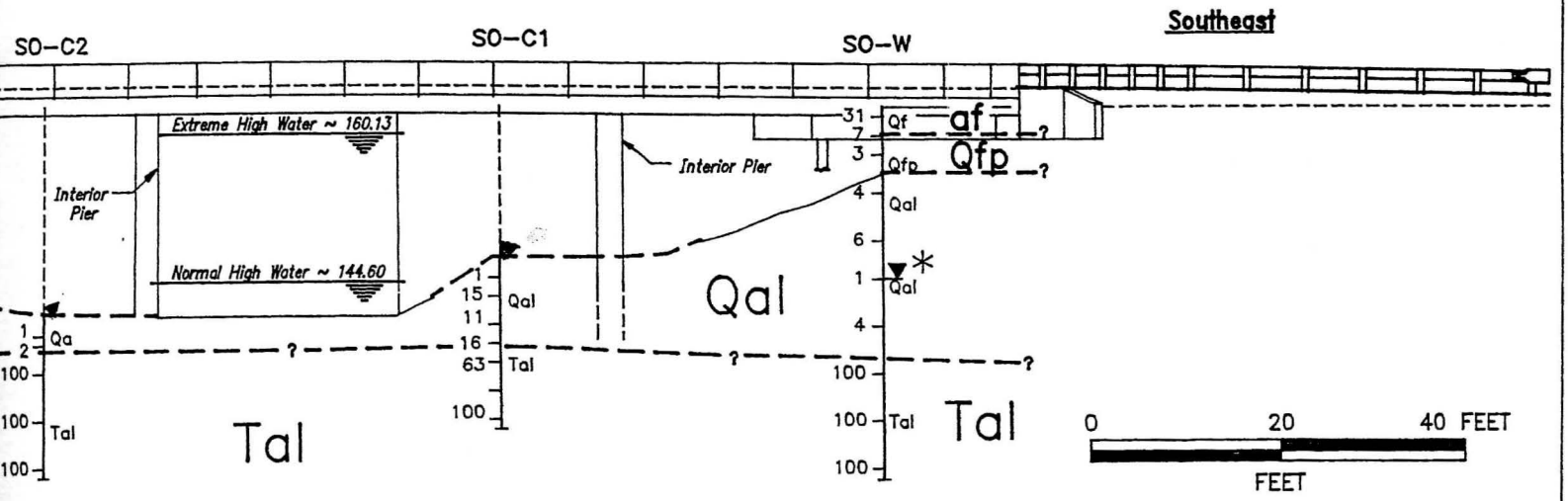

ELEVATION

FIGURE **2**

SOULE BRIDGE/WA

PACIFIC COUNTY/SOULE BRIDGE/WA

Golder Associates